TECHNICAL GUIDE

95.0% AFUE SINGLE STAGE ECM RESIDENTIAL GAS FURNACES MULTI-POSITION

MODELS: TM9E

NATURAL GAS
40 - 120 MBH INPUT

Due to continuous product improvement, specifications are subject to change without notice.

Visit us on the web at

www.upgnet.com and www.york.com

Additional rating information can be found at

www.ahridirectory.org

WARRANTY SUMMARY

A 20-year limited warranty on heat exchangers in residential applications.

A 10-year warranty on the heat exchanger in commercial applications.

Standard 5-year limited Parts warranty.

Extended lifetime heat exchanger and 10-year limited parts warranty when product is registered online within 90 days of purchase for replacement or closing for new home construction.

See Limited Warranty certificate in Users Information Manual for details.

DESCRIPTION

These compact units employ induced combustion, reliable hot surface ignition and high heat transfer aluminized tubular heat exchangers. The units are factory shipped for installation in upflow or horizontal applications and may be converted for downflow applications.

These furnaces are designed for residential installation in a basement, closet, alcove, attic, recreation room or garage and are also ideal for commercial applications. All units are factory assembled, wired and tested to assure safe dependable and economical installation and operation.

These units are Category IV listed and may be vented either through side wall or roof applications using approved plastic combustion air and vent piping.

FEATURES

- Easily applied in upflow, horizontal left or right, or downflow installation with minimal conversion necessary.
- Compact, easy to install, ideal height 33" tall cabinet.
- Blower-off delay for cooling SEER improvement.
- Easy access to controls to connect power/control wiring.
- Built-in, high level self diagnostics with fault code displays standard on integrated control module for reliable operation.
- Low unit amp requirement for easy replacement application.
- All models are convertable to use propane (LP) gas.
- Electronic Hot Surface Ignition saves fuel cost with increased dependability and reliability.
- 100% shut off main gas valve for extra safety.
- 5 speed, direct drive Standard ECM style high efficiency DC motor.
- 24V, 40 VA control transformer and blower relay supplied for add-on cooling.
- Hi-tech tubular aluminized steel primary heat exchanger.
- Secondary heat exchanger made of corrosion resistant stainless steel materials.
- Timed on, adjustable off blower capability for maximum comfort.
- Blower door safety switch.
- Solid removable bottom panel allows easy conversion.
- Airflow leakage less than 1% of nominal airflow at duct-blaster conditions.
- No knockouts to deal with, making installation easier.
- Movable duct connector flanges for application flexibility.
- Quiet inducer operation.
- Inducer rotates for easy conversion of venting options.
- Fully supported blower assembly for easy access and removal of blower.
- External air filters used for maximum flexibility in meeting customers IAQ needs.
- Protection included from air intake, exhaust vent, or condensate blockage.
- Patent pending self priming internal condensate trap design for easy installation.
- Venting applications - may be installed as a either 2-pipe (sealed combustion) or single-pipe vent (using indoor combustion air.
- No special vent termination required.
- 1/4 turn knobs provided for easy door removal.
- High-efficiency blower motor for lower electrical power usage and improved A/C SEER ratings.
- Insulated blower compartment for terminal and acoustic performance.

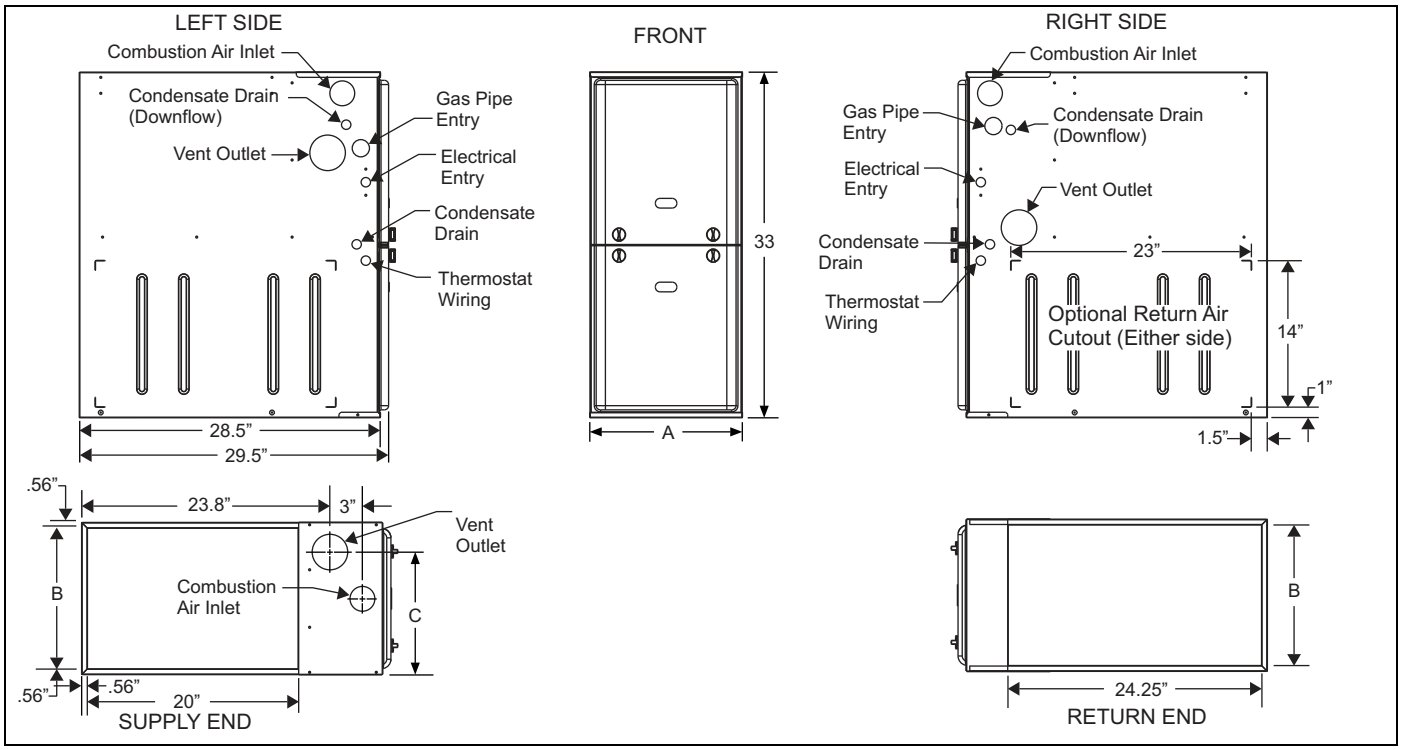

Cabinet & Duct Dimensions

BTUH (kW) Input	Nominal CFM (m^3/min)	Cabinet Size	Cabinet Dimensions (Inches)			Approximate Operating Weights
			A	B	C	Lbs
TM9E040A10MP11	1000	A	14-1/2	13-3/8	11-3/4	113
TM9E060B12MP11	1200	B	17-1/2	16-3/8	13-1/4	122
TM9E080B12MP11	1200	B	17-1/2	16-3/8	14-3/4	126
TM9E080C16MP11	1600	C	21	19-7/8	16-1/2	136
TM9E100C16MP11	1600	C	21	19-7/8	18-1/4	142
TM9E100C20MP11	2000	C	21	19-7/8	18-1/4	145
TM9E120D20MP11	2000	D	24-1/2	23-3/8	21-3/4	156

Ratings & Physical / Electrical Data

BTUH (kW) Input	Output	Nominal Airflow	AFUE	Air Temp. Rise	Max. Outlet Air Temp	Blower		Blower Size	Max Over-Current Protect	Total Unit Amps	Min. wire Size (awg) @ 75 ft one way
	MBH	CFM	%	°F	°F	HP	Amps				
TM9E040A10MP11	38	1000	95.0	45-75	180	1/2	6.8	11x8	15	9.5	14
TM9E060B12MP11	57	1200	95.0	40-70	180	1/2	6.8	11x8	15	9.5	14
TM9E080B12MP11	76	1200	95.0	50-80	170	1/2	6.8	11x8	15	9.5	14
TM9E080C16MP11	76	1600	95.0	40-70	165	1/2	6.8	11x10	15	9.5	14
TM9E100C16MP11	95	1600	95.0	45-75	170	1/2	6.8	11x10	15	9.5	14
TM9E100C20MP11	95	2000	95.0	50-80	165	3/4	8.4	11x11	15	10.9	14
TM9E120D20MP11	114	2000	95.0	50-80	175	3/4	8.4	11x11	15	10.9	14

NOTES:

Annual Fuel Utilization Efficiency (AFUE) numbers are determined in accordance with DOE Test procedures.
Wire size and over current protection must comply with the National Electrical Code (NFPA-70-latest edition) and all local codes.
The furnace shall be installed so that the electrical components are protected from water.

FILTER PERFORMANCE

The airflow capacity data published in the " Blower Performance" table shown represents blower performance WITHOUT filters.

All applications of these furnaces require the use of field installed air filters. All filter media and mounting hardware or provisions must be field installed external to the furnace cabinet. DO NOT attempt to install any filters inside the furnace.

NOTICE

Single side return above 1800 CFM is approved as long as the filter velocity does not exceed filter manufacturer□s recommendation and a transition is used to allow use on a 20x25 filter.

Recommended Filter Sizes (High velocity 600 FPM)

CFM	Cabinet Size	Side (in)	Bottom (in)
1000	A	16 x 25	14 x 25
1200	B	16 x 25	16 x 25
1600	C	16 x 25	20 x 25
2000	C	(2) 16 x 25	20 x 25
2000	D	(2) 16 x 25	22 x 25

NOTES:

1. Air velocity through throwaway type filters may not exceed 300 feet per minute (91.4 m/min). All velocities over this require the use of high velocity filters.
2. Do not exceed 1800 CFM using a single side return and a 16x25 filter. For CFM greater than 1800, you may use two side returns or one side and the bottom or one return with a transition to allow use of a 20x25 filter.

Unit Clearances to Combustibles

Application	Upflow	Downflow	Horizontal
Top	1"	0"	0"
Vent	0"	0"	0"
Rear	0"	0"	0"
Side	0"	0"	1"
Front*	0"	0"	0"
Floor	Combustible	Combustible[1]	Combustible
Closet	Yes	Yes	Yes
Line Contact	No	No	Yes

NOTES:

1. For combustible floors only when used with special sub-base.
* - 24" clearance in front and 18" on side recommended for service access.
All furnaces approved for alcove and attic installation.

ACCESSORIES

Propane (LP) Conversion Kit - This accessory conversion kit may be used to convert natural gas (N) units for propane (LP) operation.

S1-1NP0347 - All Models

Concentric Vent Termination - For use through rooftop, sidewall. Allows combustion air to enter and exhaust to exit through single common hole. Eliminates unslightly elbows for a cleaner installation.

S1-1CT0302 (2") & S1-1CT0302-636 (2")
S1-1CT0303 (3") & S1-1CT0303-636 (3")

Sidewall Vent Termination Kit - For use on sidewall, two-pipe installations only. Provide a more attractive termination for locations where the terminal is visable on the side of the home.
S1-1HT0901 (3")
S1-1HT0902 (2")

Condensate Neutralizer Kit - Neutralizer cartridge has a 1/2" plastic tube fittings for installation in the drain line. Calcium carbonate refill media is also available from the Source 1 Parts (P/N 026-30228-000).

1NK0301

Side Return Filter Racks -

S1-1SR0200 - All Models
S1-1SR0402 - All Models

Bottom Return Filter Racks - 1BR05xx series are galvanized steel filter racks. 1BR06xx are pre-painted steel filter racks to match the appearance of the furnace cabinet.

S1-1BR0514 or 1BR0614 - For 14-1/2" cabinets
S1-1BR0517 or 1BR0617 - For 17-1/2" cabinets
S1-1BR0521 or 1BR0621 - For 21" cabinets
S1-1BR0524 or 1BR0624 - For 24-1/2" cabinets

Combustible Floor Base Kit - For installation of these furnaces in downflow applications directly onto combustible flooring material, These kits are required to prevent potential overheating situations.tible floor base kit provides access for combustible airflow.

S1-1CB0514 - For 14-1/2" cabinets
S1-1CB0517 - For 17-1/2" cabinets
S1-1CB0521 - For 21" cabinets
S1-1CB0524 - For 24-1/2" cabinets

High Altitude Pressure Switches - For installation where the altitude is less than 5,000 feet it is not required that the pressure switch be changed. For altitudes above 5,000 feet, see kits below.

S1-1PS3306 - 060
S1-1PS3307 - 040, 080
S1-1PS3302 - 100, 120

Thermostats - Compatible thermostat controls are available through accessory sourcing. For optimum performance and installation, refer to the UPGNET " Low Voltage Wiring Diagram" document to select and apply controls.

Blower Performance CFM - Any Position (without filter)

Models	Speed	Bottom Airflow Data (SCFM)[1,2]									
		Ext. Static Pressure (in. H_2O)									
		0.1	0.2	0.3	0.4	0.5	0.6	0.7	0.8	0.9	1.0
TM9E040A12MP11	High	1290	1260	1220	1160	1100	1040	960	840	750	660
	Medium High	1170	1140	1110	1070	1040	990	930	820	730	650
	Medium	990	980	940	900	860	830	790	730	680	630
	Medium Low	900	880	850	810	770	730	670	630	600	560
	Low	730	710	690	650	620	590	540	510	480	450
TM9E060B12MP11	High	1402	1374	1354	1328	1299	1262	1222	1167	1107	1036
	Medium High	1252	1233	1203	1182	1150	1125	1095	1064	1031	980
	Medium	1076	1059	1029	1007	973	946	908	883	843	800
	Medium Low	988	967	936	903	875	838	806	765	737	685
	Low	798	769	727	695	650	619	574	517	485	443
TM9E080B12MP11	High	1445	1423	1397	1365	1339	1311	1283	1250	1204	1140
	Medium High	1282	1266	1232	1211	1182	1157	1128	1097	1069	1013
	Medium	1098	1084	1059	1027	998	967	939	910	879	822
	Medium Low	1012	993	953	930	894	851	828	773	752	692
	Low	865	810	763	730	689	628	594	520	496	448
TM9E080C16MP11	High	1713	1682	1643	1600	1558	1519	1480	1436	1385	1333
	Medium High	1554	1519	1485	1439	1404	1368	1327	1280	1176	1130
	Medium	1380	1351	1302	1263	1224	1171	1128	1085	1030	943
	Medium Low	1177	1142	1083	1050	988	922	890	819	798	687
	Low	951	841	650	588	457	418	355	227	203	N / A
TM9E100C16MP11	High	1734	1694	1650	1611	1570	1536	1485	1438	1392	1335
	Medium High	1568	1537	1492	1453	1414	1373	1327	1279	1230	1118
	Medium	1420	1380	1332	1294	1249	1196	1152	1100	981	938
	Medium	1218	1169	1124	1067	1015	965	894	845	754	679
	Low	979	846	647	580	464	427	345	220	195	N / A
TM9E100C20MP11	High	2143	2102	2065	2028	1989	1944	1892	1825	1733	1625
	Medium High	1788	1749	1718	1672	1629	1587	1541	1500	1447	1355
	Medium	1575	1539	1500	1456	1410	1363	1305	1246	1095	1030
	Medium Low	1372	1325	1276	1225	1170	1111	1044	972	884	812
	Low	1031	921	810	728	660	615	518	474	391	355
TM9E120D20MP11	High	2214	2173	2132	2086	2036	1994	1952	1907	1849	1777
	Medium High	1841	1799	1749	1699	1659	1611	1567	1520	1471	1372
	Medium	1605	1562	1514	1470	1416	1361	1310	1180	1119	1045
	Medium Low	1405	1362	1303	1244	1189	1125	1054	986	876	826
	Low	1135	1020	844	758	671	557	511	464	387	N / A

NOTES:
1. Airflow expressed in standard cubic feet per minute (SCFM).
2. Motor voltage at 115 V.

Subject to change without notice. Published in U.S.A.
Copyright © 2014 by Johnson Controls, Inc. All rights reserved.
1104558-YTG-B-0714
Supersedes: 1104558-YTG-A-0214

York International Corp.
5005 York Drive
Norman, OK 73069