YORK®
Heating and Air Conditioning

TECHNICAL GUIDE

95.5% AFUE SINGLE STAGE RESIDENTIAL GAS FURNACES

MULTI-POSITION

MODELS: TG9S

NATURAL GAS

40 - 130 MBH INPUT

AHRI CERTIFIED™ www.ahridirectory.org Residential Furnaces DOE 10 CFR Part 430

DESIGN CERTIFIED

ISO 9000 REGISGRATION
ISO 9001 Certified Quality Management System

LIMITED WARRANTY TO CONSUMERS Good Housekeeping Promises REPLACEMENT OR REFUND IF DEFECTIVE

Due to continuous product improvement, specifications are subject to change without notice.

Visit us on the web at www.york.com

Additional rating information can be found at

www.ahridirectory.org

WARRANTY SUMMARY

A 20-year limited warranty on heat exchangers in residential applications.

A 10-year warranty on the heat exchanger in commercial applications.

Standard 5-year limited Parts warranty.

Extended lifetime heat exchanger and 10-year limited parts warranty when product is registered online within 90 days of purchase for replacement or closing for new home construction.

See Limited Warranty certificate in Users Information Manual for details.

DESCRIPTION

These compact units employ induced combustion, reliable hot surface ignition and high heat transfer aluminized tubular heat exchangers. The units are factory shipped for installation in upflow or horizontal applications and may be converted for downflow applications.

These furnaces are designed for residential installation in a basement, closet, alcove, attic, recreation room or garage and are also ideal for commercial applications. All units are factory assembled, wired and tested to assure safe dependable and economical installation and operation.

These units are Category IV listed and may be vented either through side wall or roof applications using approved plastic combustion air and vent piping.

FEATURES

- Easily applied in upflow, horizontal left or right, or downflow installation with minimal conversion necessary.
- Compact, easy to install, ideal height 33" tall cabinet.
- Blower-off delay for cooling SEER improvement.
- Easy access to controls to connect power/control wiring.
- Built-in, high level self diagnostics with fault code displays standard on integrated control module for reliable operation.
- Low unit amp requirement for easy replacement application.
- Single wire twinning or staging feature available.
- All models are convertable to use propane (LP) gas.
- Electronic Hot Surface Ignition saves fuel cost with increased dependability and reliability.
- 100% shut off main gas valve for extra safety.
- 4 speed, direct drive PSC motor.
- 24V, 40 VA control transformer and blower relay supplied for add-on cooling.
- Hi-tech tubular aluminized steel primary heat exchanger.
- Secondary heat exchanger made of corrosion resistant stainless steel materials.
- Timed on, adjustable off blower capability for maximum comfort.
- Blower door safety switch.
- Solid removable bottom panel allows easy conversion.
- Airflow leakage less than 1% of nominal airflow at duct-blaster conditions.
- No knockouts to deal with, making installation easier.
- Movable duct connector flanges for application flexibility.
- Quiet inducer operation.
- Inducer rotates for easy conversion of venting options.
- Fully supported blower assembly for easy access and removal of blower.
- External air filters used for maximum flexibility in meeting customers IAQ needs.
- Protection included from air intake, exhaust vent, or condensate blockage.
- No special vent termination required.
- 1/4 turn knobs provided for easy door removal.
- Internal condensate trap design (patent pending) provides condensate management options and is self-priming to prevent nuisance problems.
- Venting applications - may be installed as either 2-pipe (sealed combustion) or single-pipe vent (using indoor combustion air).

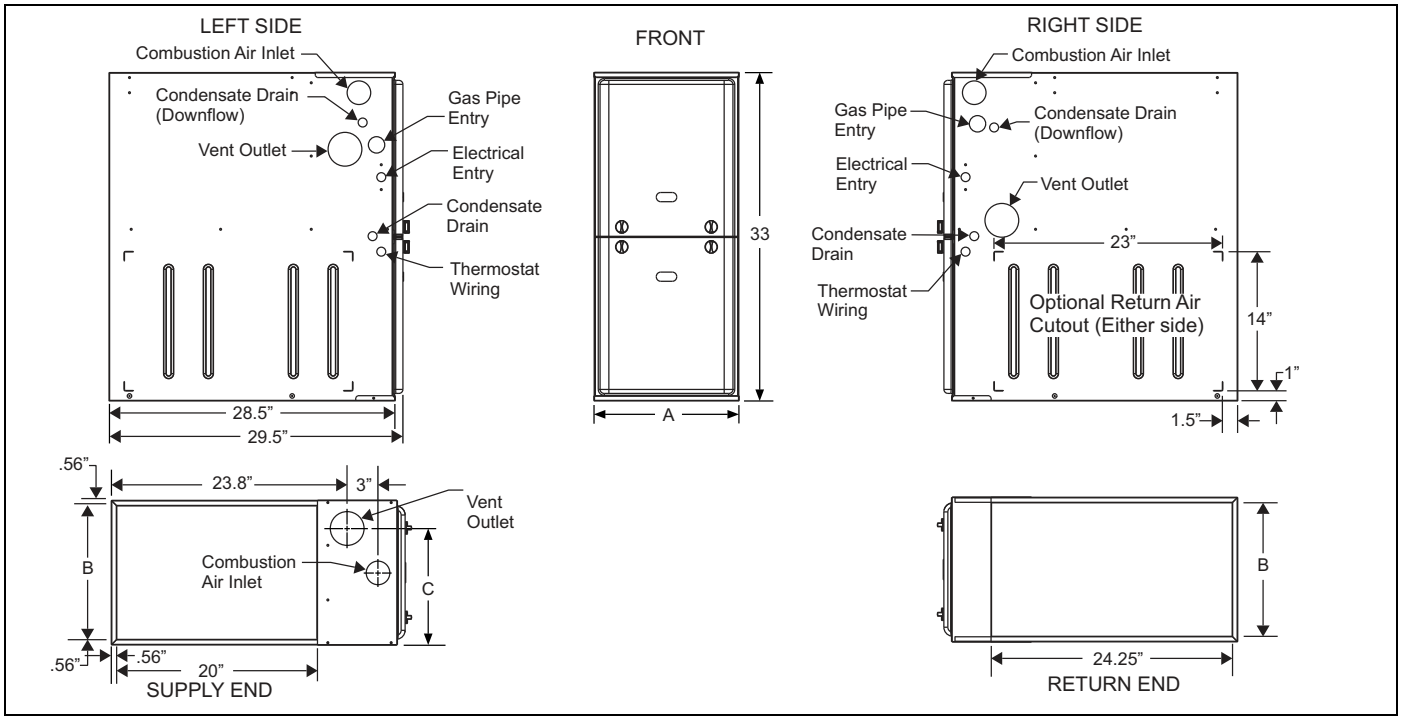

Cabinet & Duct Dimensions

Models	Nominal CFM (m^3/min)	Cabinet Size	Cabinet Dimensions (Inches)			Approximate Operating Weights
			A	B	C	Lbs
TG9S040A08MP11	800	A	14 1/2	13 3/8	11 3/4	113
TG9S060A10MP11	1000	A	14 1/2	13 3/8	11 3/4	118
TG9S060B12MP11	1200	B	17 1/2	16 3/8	13 1/4	122
TG9S080B12MP11	1200	B	17 1/2	16 3/8	14 3/4	126
TG9S080C16MP11	1600	C	21	19 7/8	16 1/2	136
TG9S080C22MP11	2200	C	21	19 7/8	16 1/2	139
TG9S100C16MP11	1600	C	21	19 7/8	18 1/4	142
TG9S100C20MP11	2000	C	21	19 7/8	18 1/4	145
TG9S120D16MP11	1600	D	24 1/2	23 3/8	21 3/4	153
TG9S120D20MP11	2000	D	24 1/2	23 3/8	21 3/4	156
TG9S130D20MP11	2000	D	24 1/2	23 3/8	No Hole	160

Ratings & Physical / Electrical Data

Models	Input	Output	AFUE %	Air Temp. Rise	Max. Outlet Air Temp	Blower		Blower Size	Max Over-Current Protect	Total Unit Amps	Min. wire Size (awg) @ 75 ft one way
	MBH	MBH		°F	°F	HP	Amps				
TG9S040A08MP11	40	38	95.5	30-60	160	1/3	4.8	11x8	15	8.0	14
TG9S060A10MP11	60	57	95.5	30-60	160	1/2	7.1	11x8	15	10.0	14
TG9S060B12MP11	60	57	95.5	30-60	160	1/2	7.1	11x8	15	10.0	14
TG9S080B12MP11	80	76	95.5	35-65	165	1/2	7.1	11x8	15	10.0	14
TG9S080C16MP11	80	76	95.5	35-65	165	3/4	8.8	11x10	15	11.5	14
TG9S080C22MP11	80	76	95.5	35-65	165	1	14.5	11x11	20	17.0	12
TG9S100C16MP11	100	95	95.5	35-65	165	3/4	8.8	11x10	15	11.5	14
TG9S100C20MP11	100	95	95.5	35-65	165	1	14.5	11x11	20	17.0	12
TG9S120D16MP11	120	114	95.5	40-70	170	3/4	8.8	11x10	15	11.5	14
TG9S120D20MP11	120	114	95.5	35-65	165	1	14.5	11x11	20	17.0	12
TG9S130D20MP11	130	123.5	95.5	45-75	175	1	14.5	11x11	20	17.0	12

Annual Fuel Utilization Efficiency (AFUE) numbers are determined in accordance with DOE Test procedures.
Wire size and over current protection must comply with the National Electrical Code (NFPA-70-latest edition) and all local codes.
The furnace shall be installed so that the electrical components are protected from water.

FILTER PERFORMANCE

The airflow capacity data published in the " Blower Performance" tables shown represents blower performance WITHOUT filters.

All applications of these furnaces require the use of field installed air filters. All filter media and mounting hardware or provisions must be field installed external to the furnace cabinet. DO NOT attempt to install any filters inside the furnace.

NOTICE

Single side return above 1800 CFM is approved as long as the filter velocity does not exceed filter manufacturer□s recommendation and a transition is used to allow use on a 20x25 filter.

Recommended Filter Sizes (High velocity 600 FPM)

CFM	Cabinet Size	Side (in)	Bottom (in)
800	A	16 x 25	14 x 25
1000	A	16 x 25	14 x 25
1200	A	16 x 25	14 x 25
1200	B	16 x 25	16 x 25
1600	B	16 x 25	16 x 25
1600	C	16 x 25	20 x 25
2000	C	(2) 16 x 25	20 x 25
2200	C	(2) 16 x 25	20 x 25
2000	D	(2) 16 x 25	22 x 25

1. Air velocity through throwaway type filters may not exceed 300 feet per minute (91.4 m/min). All velocities over this require the use of high velocity filters.
2. Do not exceed 1800 CFM using a single side return and a 16x25 filter. For CFM greater than 1800, you may use two side returns or one side and the bottom or one return with a transition to allow use of a 20x25 filter.

Unit Clearances to Combustibles

Application	Upflow	Downflow	Horizontal
Top	1"	0"	0"
Vent	0"	0"	0"
Rear	0"	0"	0"
Side	0"	0"	1"
Front*	0"	0"	0"
Floor	Combustible	Combustible[1]	Combustible
Closet	Yes	Yes	Yes
Line Contact	No	No	Yes

1. For combustible floors only when used with special sub-base.
* - 24" clearance in front and 18" on side recommended for service access.

All furnaces approved for alcove and attic installation.

ACCESSORIES

Propane (LP) Conversion Kit - This accessory conversion kit may be used to convert natural gas (N) units for propane (LP) operation.

S1-1NP0347 - All Models except 130K Model
S1-1NP0501 - 130K Model

Concentric Vent Termination - For use through rooftop, sidewall. Allows combustion air to enter and exhaust to exit through single common hole. Eliminates unslightly elbows for a cleaner installation.

S1-1CT0302 (2") & S1-1CT0302-636 (2")
S1-1CT0303 (3") & S1-1CT0303-636 (3")

Sidewall Vent Termination Kit - For use on sidewall, two-pipe installations only. Provide a more attractive termination for locations where the terminal is visable on the side of the home.

S1-1HT0901 (3")
S1-1HT0902 (2")

Condensate Neutralizer Kit - Neutralizer cartridge has a 1/2" plastic tube fittings for installation in the drain line. Calcium carbonate refill media is also available from the Source 1 Parts (p/n 026-30228-000).

1NK0301

Side Return Filter Racks -

S1-1SR0200 - All Models
S1-1SR0402 - All Models

Bottom Return Filter Racks - 1BR05xx series are galvanized steel filter racks. 1BR06xx are pre-painted steel filter racks to match the appearance of the furnace cabinet.

S1-1BR0514 or 1BR0614 - For 14-1/2" cabinets
S1-1BR0517 or 1BR0617 - For 17-1/2" cabinets
S1-1BR0521 or 1BR0621 - For 21" cabinets
S1-1BR0524 or 1BR0624 - For 24-1/2" cabinets

Combustible Floor Base Kit - For installation of these furnaces in downflow applications directly onto combustible flooring material, These kits are required to prevent potential overheating situations.tible floor base kit provides access for combustible airflow.

S1-1CB0514 - For 14-1/2" cabinets
S1-1CB0517 - For 17-1/2" cabinets
S1-1CB0521 - For 21" cabinets
S1-1CB0524 - For 24-1/2" cabinets

High Altitude Pressure Switches - For installation where the altitude is less than 5,000 feet it is not required that the pressure switch be changed. For altitudes above 5,000 feet, see kits below.

S1-1PS3306 - 060
S1-1PS3307 - 040, 080
S1-1PS3302 - 100, 120, 130

Thermostats - Compatible thermostat controls are available through accessory sourcing. For optimum performance and installation, refer to the UPGNET " Low Voltage Wiring Diagram" document to select and apply controls.

Blower Performance CFM - Any Position (without filter) - Bottom Return

Models	Speed	Bottom Airflow Data (SCFM)									
		Ext. Static Pressure (in. H2O)									
		0.1	0.2	0.3	0.4	0.5	0.6	0.7	0.8	0.9	1.0
TG9S040A08MP11	High	1128	1077	1035	996	950	891	842	781	708	646
	Medium High	934	909	867	834	818	780	745	696	631	584
	Medium Low	746	735	714	679	653	629	596	585	547	494
	Low	676	652	627	601	581	542	516	474	441	383
TG9S060A10MP11	High	1360	1290	1230	1165	1103	1043	983	925	820	776
	Medium High	1251	1198	1140	1089	1038	979	916	854	790	718
	Medium Low	1081	1062	1015	964	917	871	819	767	710	634
	Low	909	900	852	812	769	739	712	662	612	547
TG9S060B12MP11	High	1492	1442	1378	1325	1243	1176	1075	966	849	655
	Medium High	1236	1201	1161	1139	1082	1011	919	830	715	590
	Medium Low	986	950	961	916	872	831	757	703	600	510
	Low	824	795	783	744	713	659	624	554	489	389
TG9S080B12MP11	High	1597	1537	1484	1435	1370	1286	1230	1155	1075	925
	Medium High	1338	1307	1273	1223	1179	1123	1065	998	928	812
	Medium Low	1113	1094	1077	1043	1008	972	924	868	803	798
	Low	937	916	900	877	854	817	775	718	639	560
TG9S080C16MP11	High	1919	1865	1802	1738	1671	1600	1517	1414	1322	1201
	Medium High	1532	1533	1513	1499	1465	1416	1352	1283	1198	1084
	Medium Low	1232	1313	1291	1280	1250	1209	1207	1148	1055	937
	Low	826	821	853	858	838	817	794	776	760	711
TG9S080C22MP11	High	2529	2435	2338	2256	2162	2041	1920	1794	1654	1501
	Medium High	2166	2111	2070	2001	1927	1849	1719	1614	1499	1344
	Medium Low	1697	1685	1664	1631	1586	1531	1466	1393	1315	1185
	Low	1383	1377	1358	1336	1285	1244	1199	1147	1048	925
TG9S100C16MP11	High	1909	1880	1823	1776	1706	1637	1562	1474	1375	1252
	Medium High	1465	1463	1469	1485	1477	1416	1386	1324	1250	1114
	Medium	1190	1222	1216	1215	1224	1189	1158	1145	1087	996
	Low	787	834	819	836	819	810	790	761	690	707
TG9S100C20MP11	High	2284	2205	2114	2021	1934	1848	1752	1653	1505	1397
	Medium High	1967	1905	1824	1763	1712	1628	1551	1473	1379	1213
	Medium Low	1610	1563	1513	1480	1430	1367	1319	1261	1101	1012
	Low	1326	1304	1267	1232	1183	1143	1080	1003	871	798
TG9S120D16MP11	High	2020	1994	1958	1878	1805	1740	1647	1560	1445	1294
	Medium High	1551	1559	1549	1520	1494	1451	1383	1334	1253	1145
	Medium Low	1270	1267	1269	1269	1254	1227	1185	1121	1051	985
	Low	932	916	905	894	876	828	803	725	754	696
TG9S120D20MP11	High	2341	2245	2153	2072	1977	1876	1769	1642	1506	1306
	Medium High	2002	1952	1878	1823	1739	1657	1563	1458	1322	1185
	Medium Low	1615	1579	1533	1473	1430	1368	1282	1186	1091	953
	Low	1352	1295	1259	1245	1190	1141	1076	998	938	820
TG9S130D20MP11	High	2412	2329	2247	2173	2047	1980	1887	1777	1655	1511
	Medium High	2040	2004	1948	1876	1786	1738	1656	1562	1461	1314
	Medium Low	1614	1591	1549	1531	1459	1400	1335	1267	1180	1061
	Low	1327	1294	1257	1224	1198	1171	1124	1036	944	848

1. Airflow expressed in standard cubic feet per minute (CFM).
2. Motor voltage at 115 V.

Blower Performance CFM - Any Position (without filter) - Left Side Return

Models	Speed	Left Side Airflow Data (SCFM)									
		Ext. Static Pressure (in. H2O)									
		0.1	0.2	0.3	0.4	0.5	0.6	0.7	0.8	0.9	1.0
TG9S040A08MP11	High	1131	1091	1053	1003	965	921	862	800	733	659
	Medium High	982	959	935	887	846	795	745	675	628	595
	Medium Low	772	736	715	689	661	642	599	568	531	493
	Low	636	618	585	569	546	522	486	460	455	370
TG9S060A10MP11	High	1431	1375	1304	1244	1178	1109	1040	963	861	805
	Medium High	1280	1226	1171	1117	1059	1004	930	865	781	731
	Medium Low	1099	1050	1008	970	919	866	814	759	710	626
	Low	914	876	842	812	770	728	694	661	612	545
TG9S060B12MP11	High	1470	1406	1361	1309	1241	1155	1060	920	775	628
	Medium High	1211	1186	1139	1101	1042	980	896	796	681	545
	Medium Low	970	957	927	889	853	796	745	660	568	450
	Low	793	781	756	724	694	653	585	530	469	382
TG9S080B12MP11	High	1605	1562	1514	1454	1393	1330	1251	1169	1073	940
	Medium High	1372	1318	1280	1255	1205	1161	1093	1023	943	849
	Medium Low	1087	1073	1052	1003	993	953	897	843	775	709
	Low	916	896	881	854	831	802	757	708	642	574
TG9S080C16MP11	High	1956	1907	1846	1778	1717	1647	1573	1483	1353	1209
	Medium High	1543	1543	1516	1504	1477	1446	1382	1309	1202	1099
	Medium Low	1238	1241	1243	1241	1252	1242	1201	1140	1074	967
	Low	906	902	903	910	888	866	859	829	795	743
TG9S080C22MP11	High	2585	2492	2405	2321	2232	2137	2015	1902	1745	1577
	Medium High	2098	2067	2036	1982	1928	1860	1767	1670	1549	1331
	Medium Low	1619	1628	1614	1584	1545	1488	1424	1339	1216	1121
	Low	1338	1347	1327	1301	1262	1199	1138	1078	1019	938
TG9S100C16MP11	High	1828	1829	1789	1768	1727	1671	1601	1505	1390	1272
	Medium High	1422	1444	1437	1424	1396	1326	1301	1253	1200	1100
	Medium	1224	1229	1243	1234	1219	1193	1168	1135	1088	977
	Low	813	819	818	814	783	762	756	732	690	642
TG9S100C20MP11	High	2391	2286	2165	2079	2004	1934	1839	1692	1560	1366
	Medium High	1945	1878	1838	1782	1694	1642	1565	1451	1334	1163
	Medium Low	1549	1530	1495	1430	1431	1365	1284	1192	1097	1022
	Low	1256	1229	1189	1159	1089	1033	1008	950	871	784
TG9S120D16MP11	High	1998	1987	1914	1858	1798	1721	1629	1530	1417	1303
	Medium High	1512	1506	1492	1467	1441	1406	1342	1280	1206	1097
	Medium Low	1217	1219	1210	1185	1174	1148	1112	1063	1012	937
	Low	892	870	859	843	814	798	790	745	740	677
TG9S120D20MP11	High	2343	2253	2167	2071	1979	1881	1785	1668	1473	1351
	Medium High	1954	1892	1846	1781	1714	1637	1548	1429	1238	1171
	Medium Low	1596	1539	1511	1458	1399	1341	1254	1180	942	988
	Low	1299	1261	1229	1177	1111	1053	993	937	882	782
TG9S130D20MP11	High	2425	2336	2255	2157	2046	1966	1865	1758	1615	1420
	Medium High	1979	1959	1899	1825	1773	1686	1619	1516	1376	1225
	Medium Low	1582	1567	1540	1488	1443	1406	1336	1252	1146	1033
	Low	1305	1287	1239	1194	1159	1126	1062	1003	943	831

1. Airflow expressed in standard cubic feet per minute (CFM).
2. Return air is through side opposite motor (left side).
3. Motor voltage at 115 V.
4. Airflow through across motor side (right side) may be slightly less than the data shown above.

NOTES

Subject to change without notice. Published in U.S.A.
Copyright © 2013 by Johnson Controls, Inc. All rights reserved.

400991-YTG-G-0713
Supersedes: 400991-YTG-F-0512

York International Corp.
5005 York Drive
Norman, OK 73069