YORK®
Heating and Air Conditioning

TECHNICAL GUIDE

96% AFUE TWO STAGE RESIDENTIAL GAS FURNACES

MULTI-POSITION

MODELS: TM9T

NATURAL GAS
60 - 120 MBH INPUT

AHRI CERTIFIED™ www.ahridirectory.org
Residential Furnaces
DOE 10 CFR Part 430

DESIGN CERTIFIED

ISO 9000 REGISGRATION
ISO 9001
Certified Quality
Management System

LIMITED WARRANTY TO CONSUMERS
Good Housekeeping Promises
REPLACEMENT OR REFUND IF DEFECTIVE

Due to continuous product improvement, specifications are subject to change without notice.

Visit us on the web at www.york.com

Additional rating information can be found at
www.ahridirectory.org

WARRANTY SUMMARY

A 20-year limited warranty on heat exchangers in residential applications.

A 10-year warranty on the heat exchanger in commercial applications.

Standard 5-year limited Parts warranty.

Extended lifetime heat exchanger and 10-year limited parts warranty when product is registered online within 90 days of purchase for replacement or closing for new home construction.

See Limited Warranty certificate in Users Information Manual for details.

DESCRIPTION

These compact units employ induced combustion, reliable hot surface ignition and high heat transfer aluminized tubular heat exchangers. The units are factory shipped for installation in upflow or horizontal applications and may be converted for downflow applications.

These furnaces are designed for residential installation in a basement, closet, alcove, attic, recreation room or garage and are also ideal for commercial applications. All units are factory assembled, wired and tested to assure safe dependable and economical installation and operation.

These units are Category IV listed and may be vented either through side wall or roof applications using approved plastic combustion air and venr piping.

FEATURES

- Two stage heating operation includes two stage gas valve, two stage inducer operation and 4 speed, direct drive PSC motor blower operation. Adjustable delay timer allows two stage operation with a single stage thermostat.
- Easily applied in upflow, horizontal left or right, or downflow installation with minimal conversion necessary.
- Compact, easy to install, ideal height 33" tall cabinet.
- Blower-off delay for cooling SEER improvement.
- Easy access to controls to connect power/control wiring.
- Built-in, high level self diagnostics with fault code display.
- Low unit amp requirement for easy replacement application.
- All models are convertable to use propane (LP) gas.
- Electronic Hot Surface Ignition saves fuel cost with increased dependability and reliability.
- 100% shut off main gas valve for extra safety.
- 24V, 40 VA control transformer and blower relay supplied for add-on cooling.
- Hi-tech tubular aluminized steel primary heat exchanger with stainless steel tube/aluminum fin secondary heat exchanger for outstanding efficiency.
- Solid removable bottom panel allows easy conversion.
- Airflow leakage less than 1% of nominal airflow at duct-blaster conditions.
- No knockouts to deal with, making installation easier.
- Movable duct connector flanges for application flexibility.
- Quiet inducer operation.
- Inducer rotates for easy conversion of venting options.
- Fully supported blower assembly for easy access and removal of blower.
- External air filters used for maximum flexibility in meeting customers IAQ needs.
- Insulated blower compartment for thermal and acoustic performance.
- 1/4 turn knobs provided for easy independent door removal.
- Internal condensate trap design (patent pending) provides condensate management options and is self priming to prevent nuisance problems.
- Protection included from air intake, exhaust vent or condensate blockage.
- Venting applications maybe installed as either 2 pipe sealed combustion or single pipe vent using indoor combustion air.

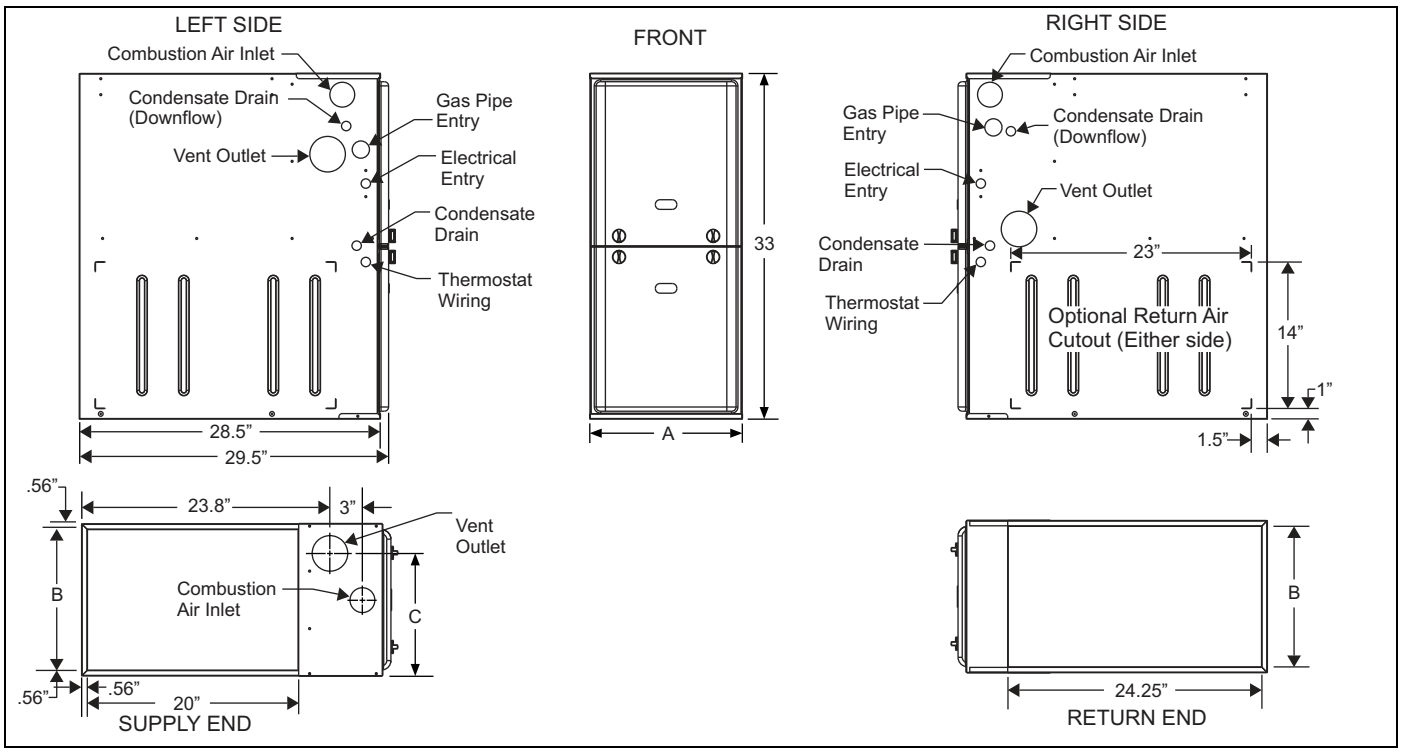

Cabinet & Duct Dimensions

BTUH (kW) Input	Nominal CFM (m^3/min)	Cabinet Size	Cabinet Dimensions (Inches)			Approximate Operating Weights
			A	B	C	Lbs
TM9T060B12MP11	1200	B	17 1/2	16 3/8	13 1/4	122
TM9T080B12MP11	1200	B	17 1/2	16 3/8	14 3/4	126
TM9T080C16MP11	1600	C	21	19 7/8	16 1/2	136
TM9T100C16MP11	1600	C	21	19 7/8	18 1/4	142
TM9T100C20MP11	2000	C	21	19 7/8	18 1/4	145
TM9T120D20MP11	2000	D	24 1/2	23 3/8	21 3/4	156

Ratings & Physical / Electrical Data

Model	Input High/Low	Output High/Low	Total Unit	AFUE	High Fire Air Temp. Rise	Low Fire Air Temp. Rise
	MBH	MBH	Amps	%	°F	°F
TM9T060B12MP11	60/39	58/37	10	96	35 - 65	35 - 65
TM9T080B12MP11	80/52	77/50	10	96	45 - 75	20 - 50
TM9T080C16MP11	80/52	77/50	11.5	96	45 - 75	25 - 55
TM9T100C16MP11	100/65	96/62	11.5	96	35 - 65	35 - 65
TM9T100C20MP11	100/65	96/62	17	96	45 - 75	20 - 50
TM9T120D20MP11	120/78	115/75	17	96	45 - 75	35 - 65

Model	Max. Outlet Air Temp.	Blower		Blower Size	Max. Over-current Protect	Min. Wire Size (awg) @ 75 ft. One Way
	°F	HP	Amps	In.		
TM9T060B12MP11	170	0.50	7	11 x 8	15	14
TM9T080B12MP11	175	0.50	7	11 x 8	15	14
TM9T080C16MP11	175	0.75	8.8	11 x 10	15	14
TM9T100C16MP11	175	0.75	8.8	11 x 10	15	14
TM9T100C20MP11	175	1.00	14.5	11 x 11	20	12
TM9T120D20MP11	180	1.00	14.5	11 x 11	20	12

Annual Fuel Utilization Efficiency (AFUE) numbers are determined in accordance with DOE Test procedures.
Wire size and over current protection must comply with the National Electrical Code (NFPA-70-latest edition) and all local codes.
The furnace shall be installed so that the electrical components are protected from water.

FILTER PERFORMANCE

The airflow capacity data published in the " Blower Performance" table shown represents blower performance WITHOUT filters.

All applications of these furnaces require the use of field installed air filters. All filter media and mounting hardware or provisions must be field installed external to the furnace cabinet. DO NOT attempt to install any filters inside the furnace.

NOTICE

Single side return above 1800 CFM is approved as long as the filter velocity does not exceed filter manufacturer□s recommendation and a transition is used to allow use on a 20x25 filter.

Recommended Filter Sizes (High velocity 600 FPM)

CFM	Cabinet Size	Side (in)	Bottom (in)
1200	B	16 x 25	16 x 25
1600	C	16 x 25	20 x 25
2000	C	(2) 16 x 25	20 x 25
2000	D	(2) 16 x 25	22 x 25

1. Air velocity through throwaway type filters may not exceed 300 feet per minute (91.4 m/min). All velocities over this require the use of high velocity filters.
2. Do not exceed 1800 CFM using a single side return and a 16x25 filter. For CFM greater than 1800, you may use two side returns or one side and the bottom or one return with a transition to allow use of a 20x25 filter.

Unit Clearances to Combustibles

Application	Upflow	Downflow	Horizontal
Top	1"	0"	0"
Vent	0"	0"	0"
Rear	0"	0"	0"
Side	0"	0"	1"
Front*	0"	0"	0"
Floor	Combustible	Combustible[1]	Combustible
Closet	Yes	Yes	Yes
Line Contact	No	No	Yes

1. For combustible floors only when used with special sub-base.

* - 24" clearance in front and 18" on side recommended for service access.
All furnaces approved for alcove and attic installation.

ACCESSORIES

Propane (LP) Conversion Kit - This accessory conversion kit may be used to convert natural gas (N) units for propane (LP) operation.

S1-1NP0347 - All Models

Concentric Vent Termination - For use through rooftop, sidewall. Allows combustion air to enter and exhaust to exit through single common hole. Eliminates unslightly elbows for a cleaner installation.

S1-1CT0302 (2") & S1-1CT0302-636 (2")
S1-1CT0303 (3") & S1-1CT0303-636 (3")

Sidewall Vent Termination Kit - For use on sidewall, two-pipe installations only. Provide a more attractive termination for locations where the terminal is visable on the side of the home.
S1-1HT0901 (3")
S1-1HT0902 (2")

Condensate Neutralizer Kit - Neutralizer cartridge has a 1/2" plastic tube fittings for installation in the drain line. Calcium carbonate refill media is also available from the Source 1 Parts (p/n 026-30228-000).

1NK0301

Side Return Filter Racks -

S1-1SR0200 - All Models
S1-1SR0402 - All Models

Bottom Return Filter Racks - 1BR05xx series are galvanized steel filter racks. 1BR06xx are pre-painted steel filter racks to match the appearance of the furnace cabinet.

S1-1BR0517 or 1BR0617 - For 17-1/2" cabinets
S1-1BR0521 or 1BR0621 - For 21" cabinets
S1-1BR0524 or 1BR0624 - For 24-1/2" cabinets

Combustible Floor Base Kit - For installation of these furnaces in downflow applications directly onto combustible flooring material, These kits are required to prevent potential overheating situations.tible floor base kit provides access for combustible airflow.

S1-1CB0517 - For 17-1/2" cabinets
S1-1CB0521 - For 21" cabinets
S1-1CB0524 - For 24-1/2" cabinets

High Altitude Pressure Switches - For installation where the altitude is less than 5,000 feet it is not required that the pressure switch be changed. For altitudes above 5,000 feet, see kits below.

S1-1PS3308 - All Models

Thermostats - Compatible thermostat controls are available through accessory sourcing. For optimum performance and installation, refer to the UPGNET " Low Voltage Wiring Diagram" document to select and apply controls.

Blower Performance CFM - Any Position (without filter)

Bottom Airflow Data (SCFM)											
Models	Speed	Ext. Static Pressure (in. H2O)									
		0.1	0.2	0.3	0.4	0.5	0.6	0.7	0.8	0.9	1.0
TM9T060B12MP11	High	1492	1442	1378	1325	1243	1176	1075	966	849	655
	Medium High	1236	1201	1161	1139	1082	1011	919	830	715	590
	Medium Low	986	950	961	916	872	831	757	703	600	510
	Low	824	795	783	744	713	659	624	554	489	389
TM9T080B12MP11	High	1597	1537	1484	1435	1370	1286	1230	1155	1075	925
	Medium High	1338	1307	1273	1223	1179	1123	1065	998	928	812
	Medium Low	1113	1094	1077	1043	1008	972	924	868	803	798
	Low	937	916	900	877	854	817	775	718	639	560
TM9T080C16MP11	High	1919	1865	1802	1738	1671	1600	1517	1414	1322	1201
	Medium High	1532	1533	1513	1499	1465	1416	1352	1283	1198	1084
	Medium Low	1232	1313	1291	1280	1250	1209	1207	1148	1055	937
	Low	826	821	853	858	838	817	794	776	760	711
TM9T100C16MP11	High	1909	1880	1823	1776	1706	1637	1562	1474	1375	1252
	Medium High	1465	1463	1469	1485	1477	1416	1386	1324	1250	1114
	Medium	1190	1222	1216	1215	1224	1189	1158	1145	1087	996
	Low	787	834	819	836	819	810	790	761	690	707
TM9T100C20MP11	High	2284	2205	2114	2021	1934	1848	1752	1653	1505	1397
	Medium High	1967	1905	1824	1763	1712	1628	1551	1473	1379	1213
	Medium Low	1610	1563	1513	1480	1430	1367	1319	1261	1101	1012
	Low	1326	1304	1267	1232	1183	1143	1080	1003	871	798
TM9T120D20MP11	High	2341	2245	2153	2072	1977	1876	1769	1642	1506	1306
	Medium High	2002	1952	1878	1823	1739	1657	1563	1458	1322	1185
	Medium Low	1615	1579	1533	1473	1430	1368	1282	1186	1091	953
	Low	1352	1295	1259	1245	1190	1141	1076	998	938	820

Left Side Airflow Data (SCFM)											
Models	Speed	Ext. Static Pressure (in. H2O)									
		0.1	0.2	0.3	0.4	0.5	0.6	0.7	0.8	0.9	1.0
TM9T060B12MP11	High	1470	1406	1361	1309	1241	1155	1060	920	775	628
	Medium High	1211	1186	1139	1101	1042	980	896	796	681	545
	Medium Low	970	957	927	889	853	796	745	660	568	450
	Low	793	781	756	724	694	653	585	530	469	382
TM9T080B12MP11	High	1605	1562	1514	1454	1393	1330	1251	1169	1073	940
	Medium High	1372	1318	1280	1255	1205	1161	1093	1023	943	849
	Medium Low	1087	1073	1052	1003	993	953	897	843	775	709
	Low	916	896	881	854	831	802	757	708	642	574
TM9T080C16MP11	High	1956	1907	1846	1778	1717	1647	1573	1483	1353	1209
	Medium High	1543	1543	1516	1504	1477	1446	1382	1309	1202	1099
	Medium Low	1238	1241	1243	1241	1252	1242	1201	1140	1074	967
	Low	906	902	903	910	888	866	859	829	795	743
TM9T100C16MP11	High	1828	1829	1789	1768	1727	1671	1601	1505	1390	1272
	Medium High	1422	1444	1437	1424	1396	1326	1301	1253	1200	1100
	Medium	1224	1229	1243	1234	1219	1193	1168	1135	1088	977
	Low	813	819	818	814	783	762	756	732	690	642
TM9T100C20MP11	High	2391	2286	2165	2079	2004	1934	1839	1692	1560	1366
	Medium High	1945	1878	1838	1782	1694	1642	1565	1451	1334	1163
	Medium Low	1549	1530	1495	1430	1431	1365	1284	1192	1097	1022
	Low	1256	1229	1189	1159	1089	1033	1008	950	871	784
TM9T120D20MP11	High	2343	2253	2167	2071	1979	1881	1785	1668	1473	1351
	Medium High	1954	1892	1846	1781	1714	1637	1548	1429	1238	1171
	Medium Low	1596	1539	1511	1458	1399	1341	1254	1180	942	988
	Low	1299	1261	1229	1177	1111	1053	993	937	882	782

1. Airflow expressed in standard cubic feet per minute (CFM).
2. Return air is through side opposite motor (left side).
3. Motor voltage at 115 V.
4. Airflow through across motor side (right side) may be slightly less than the data shown above.

Subject to change without notice. Published in U.S.A.
Copyright © 2013 by Johnson Controls, Inc. All rights reserved.

444559-YTG-E-0713
Supersedes: 444559-YTG-D-0512

York International Corp.
5005 York Drive
Norman, OK 73069