INSTALLATION MANUAL

SINGLE-STAGE ECM RESIDENTIAL GAS FURNACES

MODELS: TL9E Series

95% Upflow/Horizontal - Ultra-Low NOx

Natural Gas Only

LIST OF SECTIONS

SAFETY 1
DUCTWORK 4
FILTERS 6
GAS PIPING 7
ELECTRICAL POWER 8
CONDENSATE PIPING AND FURNACE VENTING CONFIGURATION 11
COMBUSTION AIR AND VENT SYSTEM 15
START-UP AND ADJUSTMENTS 23
SAFETY CONTROLS 28
NORMAL OPERATION AND DIAGNOSTICS 29
REPLACEMENT PARTS LIST 31
WIRING DIAGRAM 32
START-UP SHEET 33

LIST OF FIGURES

Duct Attachment 4
Furnace and Coil Attachment 5
Horizontal Application 5
Typical Attic Installation 5
Typical Suspended Furnace/Crawl Space Installation 6
Dimensions 6
Side Return Cutout Markings 7
Gas Valve 7
Left Side Supply Gas Pipe Arrangement 7
Gas Piping 8
Electrical Wiring 9
Thermostat Chart - Single-Stage AC with Single-Stage Furnaces . 10
Thermostat Chart - Single-Stage HP with Single-Stage Furnaces . 10
Thermostat Chart - 1H/2C - Single-Stage Furnace (STD-ECM) - Two-Stage Air Conditioner 11
Typical - Condensate Drain, Vertical Installation 12
Upflow Configuration 13
Horizontal Configuration 14
Elbow Dimensions 16
Home Layout 18
Termination Configuration - 1 Pipe 19
Termination Configuration - 2 Pipe 19
Termination Configuration - 2 Pipe Basement 19
Double Horizontal Combustion Air Intake and Vent Termination . . . 20
Double Vertical Combustion Air Intake and Vent Termination 20
Downward Venting 20
Direct Vent Air Intake Connection and Vent Connection 20
Combustion Airflow Path Through the Furnace Casing 21
Ambient Combustion Air 22
Attic and Crawl Space Combustion Air Termination 23
Gas Valve 26
Reading Gas Pressure 26
Furnace Control Board 27
Wiring Diagram 32

LIST OF TABLES

Unit Clearances to Combustibles 4
Cabinet and Duct Dimensions 6
Recommended Filter Sizes (High Velocity 600 FPM) 7
Ratings and Physical/Electrical Data 8
Maximum Equivalent Pipe Length 16
Elbow Dimensions 16
Equivalent Length of Fittings 16
Combustion Air Intake and Vent Connection Size at Furnace (All Models) 16
Estimated Free Area 21
Unconfined Space Minimum Area 21
Free Area 21
Gas Rate (CU FT/HR) at Full Input 25
Inlet Gas Pressure Range 26
Nominal Manifold Pressure 26
Blower Performance CFM - Any Position (Without Filter) 28

These high efficiency, compact units employ induced combustion, reliable hot surface ignition, and high heat transfer tubular heat exchangers. The units are factory shipped for installation in upflow or horizontal applications.

These furnaces are designed for residential installation in a basement, closet, alcove, attic, recreation room, or garage and are also ideal for commercial applications. All units are factory assembled, wired, and tested to ensure safe, dependable, and economical installation and operation.

These units are Category IV listed and can not be common vented with another gas appliance as allowed by the National Fuel Gas Code.

SECTION I: SAFETY

This is a safety alert symbol. When you see this symbol on labels or in manuals, be alert to the potential for personal injury.

Understand and pay particular attention to the signal words **DANGER**, **WARNING**, or **CAUTION**.

DANGER indicates an **imminently** hazardous situation, which, if not avoided, **will result in death or serious injury**.

WARNING indicates a **potentially** hazardous situation, which, if not avoided, **could result in death or serious injury**.

CAUTION indicates a potentially hazardous situation, which, if not avoided **may result in minor or moderate injury.** It is also used to alert against unsafe practices and hazards involving only property damage.

⚠ WARNING

Improper installation may create a condition where the operation of the product could cause personal injury or property damage.

Improper installation, adjustment, alteration, service, or maintenance can cause injury or property damage. **Failure to carefully read and follow all instructions in this manual can result in furnace malfunction, death, personal injury, and/or property damage.** Only a qualified contractor, installer, or service agency should install this product.

SPECIFIC SAFETY RULES AND PRECAUTIONS

- Only Natural gas is approved for use with this furnace.
- Install this furnace only in a location and position specified in these instructions.
- A gas-fired furnace for installation in a residential garage must be installed as specified in these instructions.
- Provide adequate combustion and ventilation air to the furnace space as specified in these instructions.
- Combustion products must be discharged outdoors. Connect this furnace only to an approved vent system as specified in SECTION VII: COMBUSTION AIR AND VENT SYSTEM of these instructions.
- Test for gas leaks as specified in these instructions.

⚠ WARNING

FIRE OR EXPLOSION HAZARD

Failure to follow the safety warnings exactly could result in serious injury, death or property damage.

Never test for gas leaks with an open flame. Use a commercially available soap solution made specifically for detection of leaks to check all connections. A fire or explosion may result causing property damage, personal injury or loss of life.

- Always install the furnace to operate within the furnace's intended temperature rise range. Connect the furnace only to a duct system that has an external static pressure within the allowable range, as specified on the furnace rating plate.
- When a furnace is installed so supply ducts carry air circulated by the furnace to areas outside the space containing the furnace, the return air must also be handled by a duct or ducts sealed to the furnace casing and terminating outside the space containing the furnace.
- Do not use this furnace for heating of buildings or structures under construction.
- When installed in a non-HUD-approved modular home or building constructed on-site, combustion air must not be supplied from occupied spaces.
- The size of the unit must be based on an acceptable heat loss calculation for the structure. ACCA, Manual J, or other approved methods can be used.
- When moving or handling this furnace before installation, leave the doors on the furnace to provide support and prevent damage or warping of the cabinet. When lifting the furnace by the cabinet, support the ends of the furnace rather than lifting the furnace by the cabinet flanges at the return air openings (bottom or sides) or supply air opening.
- When lifting the furnace, it is acceptable to use the primary heat exchanger tubes as a lifting point, provided that the tubes are lifted at the front of the heat exchangers where attached to the vestibule panel. Do not use the top return bend of the heat exchangers as lifting points because the tubes can shift out of position or their location brackets/baffles.

IMPORTANT: During installation, doors must remain on the furnace when moving or lifting.

SAFETY REQUIREMENTS

⚠ CAUTION

This product must be installed in strict compliance with the installation instructions and any applicable local, state, and national codes including, but not limited to building, electrical, and mechanical codes.

- Refer to the unit rating plate for the furnace model number, and then see Figure 6 for return air plenum dimensions. The plenum must be installed according to the instructions.
- Provide clearances from combustible materials as listed in Table 1.
- Provide clearances for servicing, ensuring that service access is allowed for both the burners and blower.
- These models **are not** CSA listed or approved for installation in a **HUD-approved modular home** or a **manufactured (mobile) home**.
- This furnace is not approved for installation in trailers or recreational vehicles.
- Furnaces for installation on combustible flooring must not be installed directly on carpeting, tile, or other combustible material other than wood flooring.
- Check the rating plate and power supply to be sure that the electrical characteristics match. All models use nominal 115-VAC, 1-Phase, 60-Hz power supply. DO NOT CONNECT THIS APPLIANCE TO A 50-Hz POWER SUPPLY OR A VOLTAGE ABOVE 130 V.
- Install the furnace so the electrical components are protected from water.
- Installing and servicing heating equipment can be hazardous due to the electrical components and the gas-fired components. Only trained and qualified personnel must install, repair, or service gas heating equipment. Untrained service personnel can perform basic maintenance functions such as cleaning and replacing the air filters. When working on heating equipment, observe precautions in the manuals and on the labels attached to the unit and other safety precautions that apply.

COMBUSTION AIR QUALITY (LIST OF CONTAMINANTS)

The furnace requires **OUTDOOR AIR** for combustion when the furnace is located in any of the following environments:

- Buildings with indoor pools
- Chemical exposure
- Commercial buildings
- Hobby or craft rooms
- Laundry rooms
- Furnaces installed near chemical storage areas
- Restricted environments

The furnace requires **OUTDOOR AIR** for combustion when the furnace is located in an area where the furnace is exposed to the following substances and/or chemicals.

- Antistatic fabric softeners for clothes dryers
- Carbon tetrachloride
- Cements and glues
- Chlorine based swimming pool chemicals
- Chlorinated waxes and cleaners
- Cleaning solvents (such as perchloroethylene)
- Deicing salts or chemicals
- Halogen type refrigerants
- Hydrochloric acid
- Masonry acid washing materials
- Permanent wave solutions
- Printing inks, paint removers, varnishes, etc.
- Water softening chemicals

When outdoor air is used for combustion, the combustion air intake duct system termination must be located external to the building in an area where there is no exposure to the substances listed above.

⚠ WARNING

The furnace area must not be used as a broom closet or for any other storage purposes, as a fire hazard may be created. Never store items such as the following on, near or in contact with the furnace.

1. Spray or aerosol cans, rags, brooms, dust mops, vacuum cleaners or other cleaning tools
2. Soap powders, bleaches, waxes or other cleaning compounds; plastic items or containers; gasoline, kerosene, cigarette lighter fluid, dry cleaning fluids or other volatile fluid
3. Paint thinners and other painting compounds
4. Paper bags, boxes or other paper products

Never operate the furnace with the blower door removed. To do so could result in serious personal injury and/or equipment damage.

CODES AND STANDARDS

Follow all national and local codes and standards in addition to this installation manual. The installation must comply with regulations of the serving gas supplier, local building, heating, and plumbing codes, and other codes. In the absence of local codes, the installation must comply with the national codes listed below and all authorities having jurisdiction.

In the United States and Canada, follow all codes and standards for the following, using the latest edition available:

Safety

- US: National Fuel Gas Code (NFGC) NFPA 54/ANSI Z223.1 and the Installation Standards, Warm Air Heating and Air Conditioning Systems ANSI/NFPA 90B
- CANADA: CAN/CGA-B149.1 National Standard of Canada. Natural Gas and Propane Installation Codes (NSCNGPIC)

General Installation

- US: Current edition of the NFGC and NFPA 90B. For copies, contact:

  National Fire Protection Association Inc.
  Batterymarch Park
  Quincy, MA 02269

  or for only the NFGC, contact:

  American Gas Association,
  400 N. Capital, N.W.
  Washington DC 20001

  or www.NFPA.org
- CANADA: NSCNGPIC. For a copy, contact:

  Standard Sales, CSA International
  178 Rexdale Boulevard
  Etobicoke, (Toronto) Ontario Canada M9W 1RS

Combustion and Ventilation Air

- US: Section 5.3 of the NFGC, air for Combustion and Ventilation
- CANADA: Part 7 of NSCNGPIC, Venting Systems and Air Supply for Appliances

Duct Systems

- US and CANADA: Air Conditioning Contractors Association (ACCA) Manual D, Sheet Metal and Air Conditioning Contractors Association National Association (SMACNA), or American Society of Heating, Refrigeration, and Air Conditioning Engineers (ASHRAE) 1997 Fundamentals Handbook Chapter 32.

Acoustical Lining and Fibrous Glass Duct

- US and CANADA: Current edition of SMACNA and NFPA 90B as tested by UL Standard 181 for Class 1 Rigid Air Ducts

Gas Piping and Gas Pipe Pressure Testing

- US: NFGC - chapters 2, 3, 4, and 9 and National Plumbing Codes
- CANADA: NSCNGPIC Part 5

Electrical Connections

- US: National Electrical Code (NEC) ANSI/NFPA 70
- CANADA: Canadian Electrical Code CSA C22.1

These instructions cover minimum requirements and conform to existing national standards and safety codes. In some instances, these instructions exceed certain local codes and ordinances, especially those that do not reflect changing residential and non-HUD modular home construction practices. These instructions are required as a minimum for a safe installation.

INSPECTION

On receiving a unit, inspect the unit for possible damage during transit. If damage is evident, note the extent of the damage on the carrier's freight bill. Make a separate request for inspection by the carrier's agent in writing. Before installation, check the unit for screws or bolts that may have loosened in transit. There are no shipping or spacer brackets that need to be removed from the interior of this unit.

FURNACE LOCATION AND CLEARANCES

Locate the furnace using the following guidelines:

- Where a minimum amount of air intake/vent piping and elbows are required
- As centralized with the air distribution as possible
- Where adequate combustion air is available (particularly when the appliance is not using outdoor combustion air)
- Where it does not interfere with correct air circulation in the confined space
- Where the outdoor vent terminal is not blocked or restricted. See the VENT CLEARANCES section. These minimum clearances must be maintained in the installation.
- Where the unit is installed in a level position side-to-side. The unit must be installed with a slight (1/4 in.) slope toward the front of the unit to assist in condensate drainage.

Installation in freezing temperatures:

- Install the furnace in an area where ventilation facilities provide for safe limits of ambient temperature under normal operating conditions. Ambient temperatures must not fall below 32°F (0°C) unless the condensate system is protected from freezing.

⚠ WARNING

Improper installation in an ambient below 32ºF (0.0° C) could create a hazard, resulting in damage, injury or death.

- Do not allow the return air temperature to be below 55ºF (13°C) for extended periods. To do so can cause condensation to occur in the main heat exchanger, leading to premature heat exchanger failure.
- If this furnace is installed in an unconditioned space and an extended power failure occurs, there is potential for damage to the internal components. Following a power failure, do not operate the unit until inspection and repairs are performed.

⚠ WARNING

Liquid anti-freeze will cause damage to internal plastic parts of this furnace. **DO NOT attempt to winterize the furnace using liquid anti-freeze.**

Clearances for access/service:

Provide ample clearances to permit easy access to the unit. The following minimum clearances are recommended:

- 24 in. (61 cm) between the front of the furnace and an adjacent wall or another appliance, when access is required for servicing and cleaning
- 18 in. (46 cm) at the side where access is required for passage to the front when servicing or for inspection or replacement of flue/vent connections.

In all cases, accessibility clearances take precedence over clearances for combustible materials where accessibility clearances are greater.

Installation in a residential garage:

A gas-fired furnace for installation in a residential garage must be installed so the burners and the ignition source are located not less than 18 in. (46 cm) above the floor, and the furnace must be located or protected to avoid physical damage by vehicles.

Table 1: Unit Clearances to Combustibles

Application	Upflow	Horizontal
Top	1 in.	0 in.
Vent	0 in.	0 in.
Rear	0 in.	0 in.
Side	0 in.	1 in.
Front*	0 in.	0 in.
Floor	Combustible	Combustible
Closet	Yes	Yes
Line Contact	No	Yes

*24 in. clearance in front and 18 in. on side recommended for service access.
Note: All furnaces are approved for alcove and attic installation.

SECTION II: DUCTWORK

DUCTWORK GENERAL INFORMATION

The duct system's design and installation must:

- Handle an air volume appropriate for the served space and within the operating parameters of the furnace specifications.
- Be installed in accordance with National Fire Protection Association as outlined in NFPA standard 90B (latest editions) or applicable national, provincial, state, and local fire and safety codes.
- Create a closed duct system. When a furnace is installed so the supply ducts carry air circulated by the furnace to areas outside the space containing the furnace, the return air must also be handled by a duct or ducts sealed to the furnace casing and terminating outside the space containing the furnace.
- Complete a path for heated or cooled air to circulate through the air conditioning and heating equipment and to and from the conditioned space.

⚠ CAUTION

The indoor coil must be installed in the supply air duct, downstream of the furnace. Cooled air may not be passed over the heat exchanger.

When the furnace is used with an indoor coil, the coil must be installed parallel with, or in the supply air side of the furnace to avoid condensation in the primary heat exchanger. When a parallel flow arrangement is used, dampers or other means used to control airflow must be adequate to prevent chilled air from entering the furnace. If manually operated, the damper must be equipped with means to prevent the furnace or the air conditioner from operating unless the damper is in full heat or cool position.

When replacing an existing furnace, if the existing plenum is not the same size as the new furnace, the existing plenum must be removed and a new plenum installed that is the correct size for the new furnace. If the plenum is shorter than 12 in. (30.5 cm) the turbulent airflow may cause the limit controls not to operate as designed, or the limit controls may not operate at all.

The duct system is a very important part of the installation. **If the duct system is incorrectly sized, the furnace does not operate correctly.** The ducts attached to the furnace plenum must be of sufficient size so the furnace operates at the specified external static pressure and within the air temperature rise specified on the nameplate.

IMPORTANT: The minimum plenum height is 12 in. (30.5 cm). The furnace does not operate correctly on a shorter plenum height. The minimum recommended rectangular duct height is 4 in. (10.1 cm) attached to the plenum.

If a matching cased indoor coil is used, it can be placed directly on the furnace outlet and sealed to prevent leakage. If an uncased indoor coil with a thermoplastic drain pan is installed in the upflow/horizontal configuration, an extra 2 in. minimum spacing may be needed to ensure against drain pan distortion.

On all installations without a coil, a removable access panel is recommended in the outlet duct such that smoke or reflected light would be observable inside the casing to indicate the presence of leaks in the heat exchanger. This access cover must be attached in such a manner as to prevent leaks.

⚠ WARNING

The duct system must be properly sized to obtain the correct airflow for the furnace size that is being installed.

Refer to the furnace rating plate for the correct rise range and static pressures or to Table 4 for the correct rise range.

If the ducts are undersized, the result will be high duct static pressures and/or high temperature rises which can result in a heat exchanger OVERHEATING CONDITION. This condition can result in premature heat exchanger failure, which can result in personal injury, property damage, or death.

DUCT FLANGES

Four flanges are provided to attach ductwork to the furnace. These flanges are rotated down for shipment. To use the flanges, do the following:

1. Remove the screw holding an individual flange.
2. Rotate the flange so it is in the upward position.
3. Reinstall the screw.
4. Repeat Steps 1 to 3 for all four flanges.

If the flanges are not used, they must remain in the rotated down position as shipped.

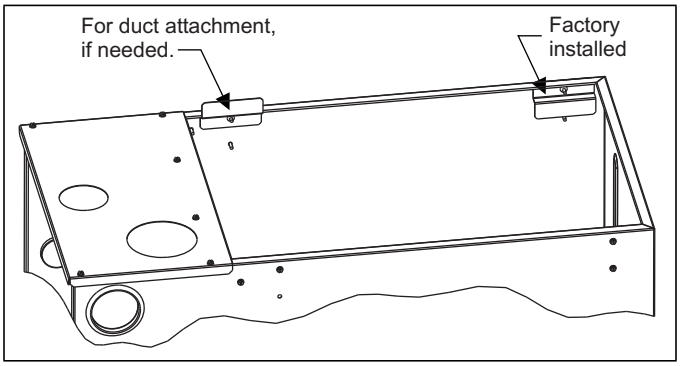

Figure 1: Duct Attachment

DUCTWORK INSTALLATION AND SUPPLY PLENUM CONNECTION

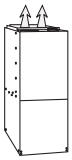

Attach the supply plenum to the furnace outlet. Use an approved flexible duct connector for all installations. Seal this connection to prevent air leakage. The sheet metal must be crosshatched to eliminate any popping of the sheet metal when the indoor fan is energized.

INDOOR COIL INSTALLATION

IMPORTANT: On all installations without an indoor coil, a removable access panel is recommended in the outlet duct such that smoke or reflected light would be observable inside the casing to indicate the presence of leaks in the heat exchanger. This access cover must be attached in such a manner as to prevent leaks.

The indoor coil must be mounted on the supply side of the furnace as shown in Figure 2. Refer to the installation instructions provided with each indoor coil.

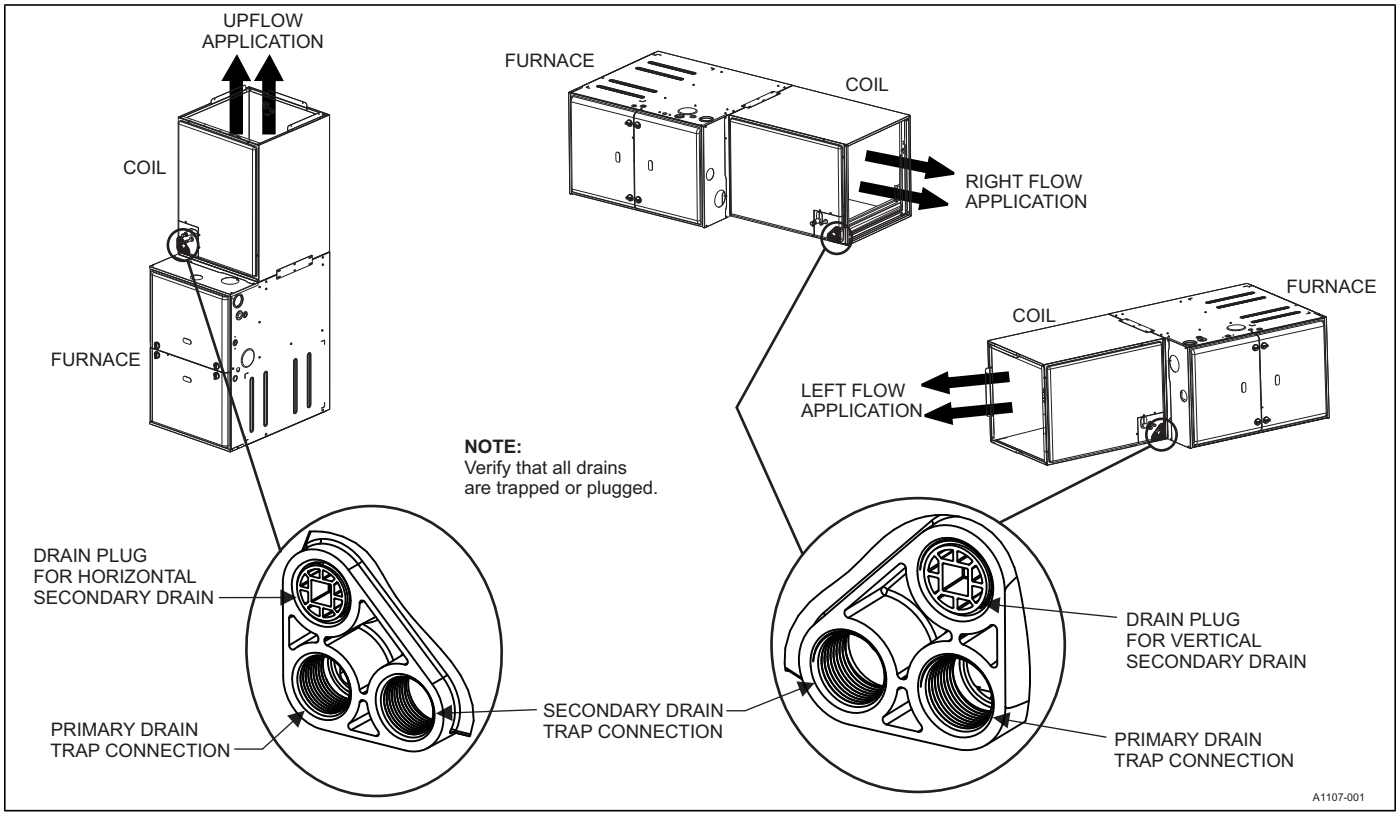

Figure 2: Furnace and Coil Attachment

RESIDENTIAL HOME UPFLOW RETURN PLENUM CONNECTION

Return air can enter the furnace through the sides or bottom, depending on the type of application. Return air must not be connected into the rear panel of the unit.

SIDE RETURN APPLICATION

Side return applications pull return air through an opening cut in the side of the furnace casing. This furnace is supplied with a bottom block-off panel that must be left in place if a side return is used. If the furnace is installed on a flat, solid surface, this bottom panel provides an adequate seal to prevent air leakage through the unused bottom opening. However, if the furnace is installed on a surface that is uneven, or if it is installed on blocks or otherwise raised off the floor, **it is necessary to seal the edges of the bottom panel to the casing using tape or other appropriate gasket material to prevent air leakage.**

BOTTOM RETURN AND ATTIC INSTALLATIONS

Bottom return applications normally pull return air through a base platform or return air plenum. Make sure the return platform structure or return air plenum is suitable to support the weight of the furnace.

The internal bottom panel must be removed for this application.

Attic installations must meet all minimum clearances to combustibles and have floor support with required service accessibility.

HORIZONTAL APPLICATION

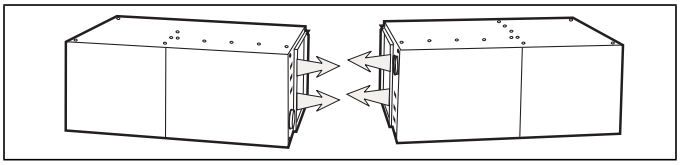

Figure 3: Horizontal Application

IMPORTANT: This furnace can be installed in a horizontal position on either side as shown above. **It must not be installed on its back.**

ATTIC INSTALLATION

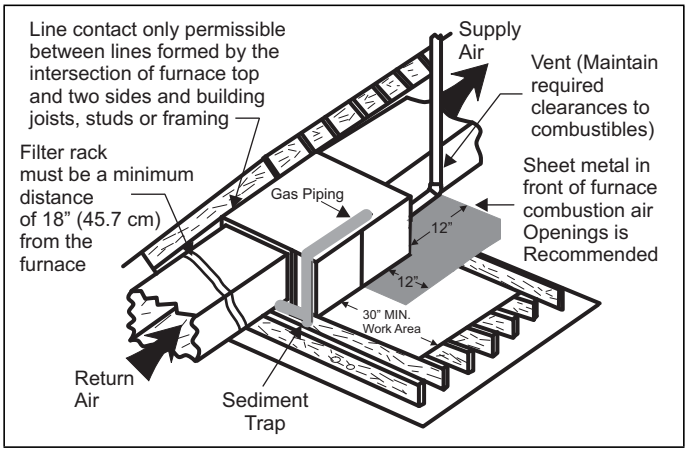

Figure 4: Typical Attic Installation

This appliance is certified for line contact when the furnace is installed in the horizontal left or right position. The line contact is only permissible between lines that are formed by the intersection of the top and two sides of the furnace and the building joists, studs, or framing. This line can be in contact with combustible material. See Figure 4.

⚠ WARNING

When a furnace is installed in an attic or other insulated space, keep all insulating materials at least 12 in. (30.5 cm) away from furnace and burner combustion air openings.

IMPORTANT: During installation, doors must remain on the furnace when moving or lifting.

When moving or handling the furnace before installation, leave the doors on the furnace to provide support and prevent damage or warping of the cabinet. When lifting the furnace, support the ends of the furnace rather than lifting the furnace by the cabinet flanges at the return air openings (bottom or sides) or supply air opening.

It is acceptable to use the primary heat exchanger tubes as a lifting point, provided that the tubes are lifted at the front of the heat exchangers where attached to the vestibule panel. Do not use the top return bend of the heat exchangers as lifting points because the tubes can shift out of position or their location brackets/baffles.

SUSPENDED FURNACE/CRAWL SPACE INSTALLATION

The furnace can be hung from floor joists or installed on suitable blocks or pads. Blocks or pad installations must provide adequate height to ensure that the unit is not subject to water damage.

Units can also be suspended from rafters or floor joists using rods, pipe angle supports, or straps. In all cases, the furnace must be supported with rods, straps, or angle supports at three locations to correctly support the furnace. Place one support at the supply end of the furnace, place one support approximately in the center of the furnace near the blower shelf, and place the third support at the return end of the furnace. Maintain a 6 in. (15.2 cm) minimum clearance between the front of the furnace and the support rods or straps.

All six suspension points must be level to ensure correct and quiet furnace operation. When suspending the furnace, use a secure platform constructed of plywood or other building materials secured to the floor or ceiling joists. See Figure 5 for details and additional information.

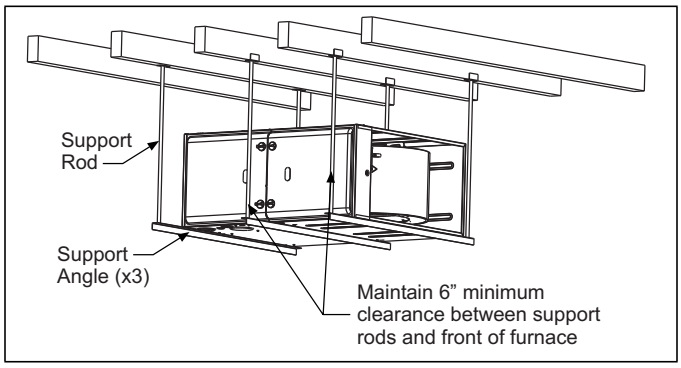

Figure 5: Typical Suspended Furnace/Crawl Space Installation

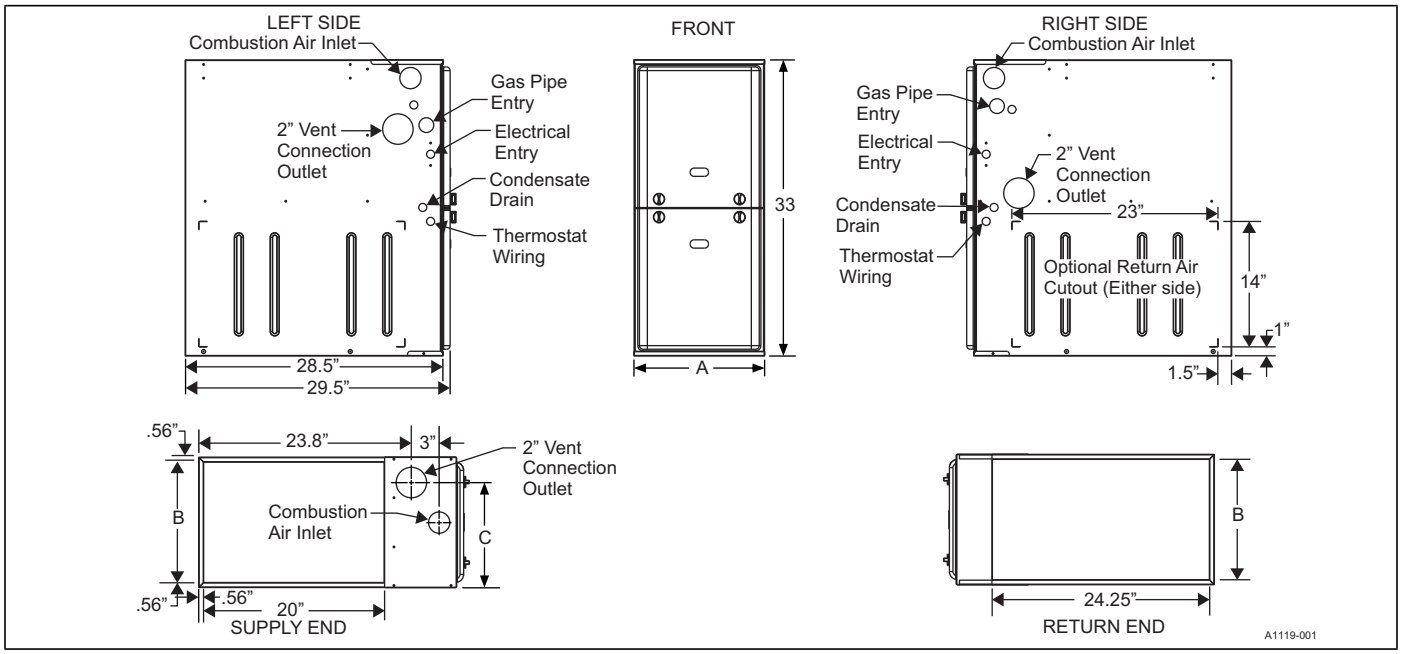

Figure 6: Dimensions

Table 2: Cabinet and Duct Dimensions

Model	Nominal CFM (m^3/min)	Cabinet Size	Cabinet Dimensions (in.)						Approximate Operating Weights
			A (in.)	A (cm)	B (in.)	B (cm)	C (in.)	C (cm)	lb (kg)
60 (17.6)	1200 (34.0)	B	17 1/2	44.4	16 3/8	41.6	13 1/4	33.7	122
80 (23.4)	1600 (45.3)	C	21	53.3	19 7/8	50.5	16 1/2	41.9	136
100 (29.3)	2000 (56.6)	C	21	53.3	19 7/8	50.5	18 1/4	46.4	145

SECTION III: FILTERS

FILTER INSTALLATION

⚠ CAUTION

All filters and mounting provision must be field supplied. All installations must have a filter installed.

All applications require the use of a field installed filter. All filters and mounting provision must be field supplied.

Filters must be installed external to the furnace cabinet. **DO NOT attempt to install filters inside the furnace.**

NOTICE

Single side return above 1800 CFM is approved as long as the filter velocity does not exceed filter manufacturer’s recommendation and a transition is used to allow use on a 20 x 25 filter.

Table 3: Recommended Filter Sizes (High Velocity 600 FPM)

CFM (m^3/min)	Cabinet Size	Side (in.)	Bottom (in.)
1200 (34.0)	B	16 x 25	16 x 25
1600 (45.3)	C	16 x 25	20 x 25
2000 (56.6)	C	(2) 16 x 25	20 x 25

Notes:
Air velocity through throwaway filters must not exceed 300 ft/min (91.4 m/min). All velocities over this require the use of high velocity filters.
Do not exceed 1800 CFM using a single side return and a 16 x 25 filter. For CFM greater than 1800, you can use two side returns, or one side and the bottom, or one side return with a transition to allow use of a 20 x 25 filter.

SIDE RETURN

Locate the L-shaped corner locators. These indicate the size of the cut-out to be made in the furnace side panel. See Figure 7.

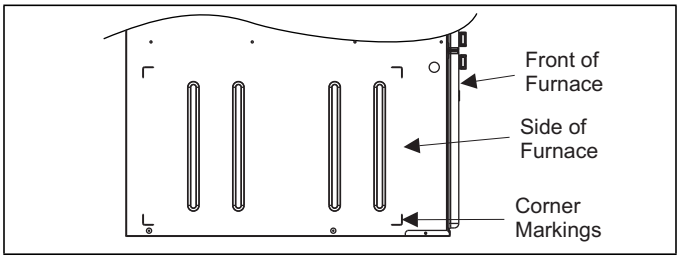

Figure 7: Side Return Cutout Markings

Install the side filter rack following the instructions provided with that accessory. If filters are provided at another location in the return air system, the ductwork can be directly attached to the furnace side panel.

IMPORTANT: Some accessories such as electronic air cleaners and pleated media may require a larger side opening. Follow the instructions supplied with that accessory for side opening requirements. Do not cut the opening larger than the dimensions for the Optional Return Air Cutout shown in Figure 6.

HORIZONTAL FILTERS

Any branch duct (rectangular or round duct) attached to the plenum must attach to the vertical plenum before the filter. The use of straps and/or supports is required to support the weight of the external filter box.

SECTION IV: GAS PIPING

GAS SAFETY

⚠ DANGER

An overpressure protection device, such as a pressure regulator, must be installed in the gas piping system upstream of the furnace and must act to limit the downstream pressure to the gas valve so it does not exceed 0.5 psig (14 in. W.C., 3.48 kPa). Pressures exceeding 0.5 PSI (14 in. W.C., 3.48 kPa) at the gas valve will cause damage to the gas valve, resulting in a fire or explosion or cause damage to the furnace or some of its components that will result in property damage and loss of life.

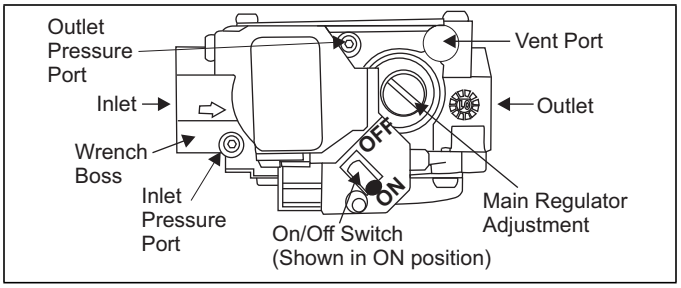

Figure 8: Gas Valve

IMPORTANT: Plan the gas supply routing before determining the correct gas pipe entry. Use 90° conventional elbows and short pipe nipples to enter through the cabinet access holes.

GAS PIPING INSTALLATION

Correctly sized wrought iron, approved flexible or steel pipe must be used when making gas connections to the unit. If local codes allow the use of a flexible gas appliance connection, always use a new listed connector. Do not use a connector that has previously serviced another gas appliance.

Some utility companies or local codes require pipe sizes larger than the minimum sizes listed in these instructions and in the codes. The furnace rating plate and the instructions in this section specify the type of gas approved for this furnace - only use those approved gases. The installation of a drip leg and ground union is required. See Figure 10.

For left side supply gas pipe arrangement, two 1/2 in. elbows and two 1/2 in. x 1-1/2 in. pipe nipples must be used. The arrangement shown in Figure 9 aligns entrance hole in furnace casing with supply gas pipe. Furnace casing does not support installations completed using street-elbows.

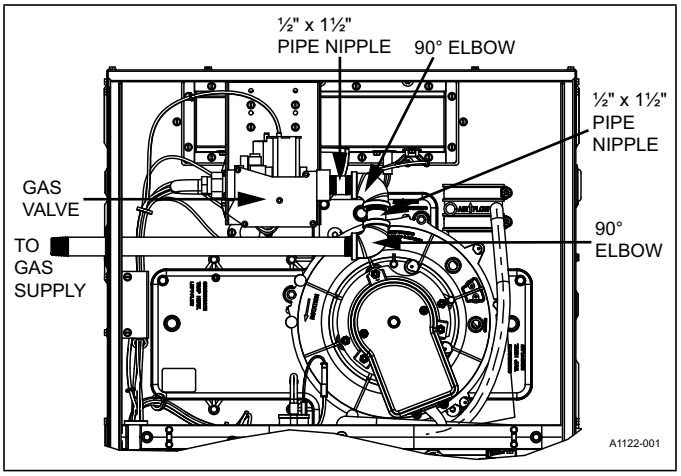

Figure 9: Left Side Supply Gas Pipe Arrangement

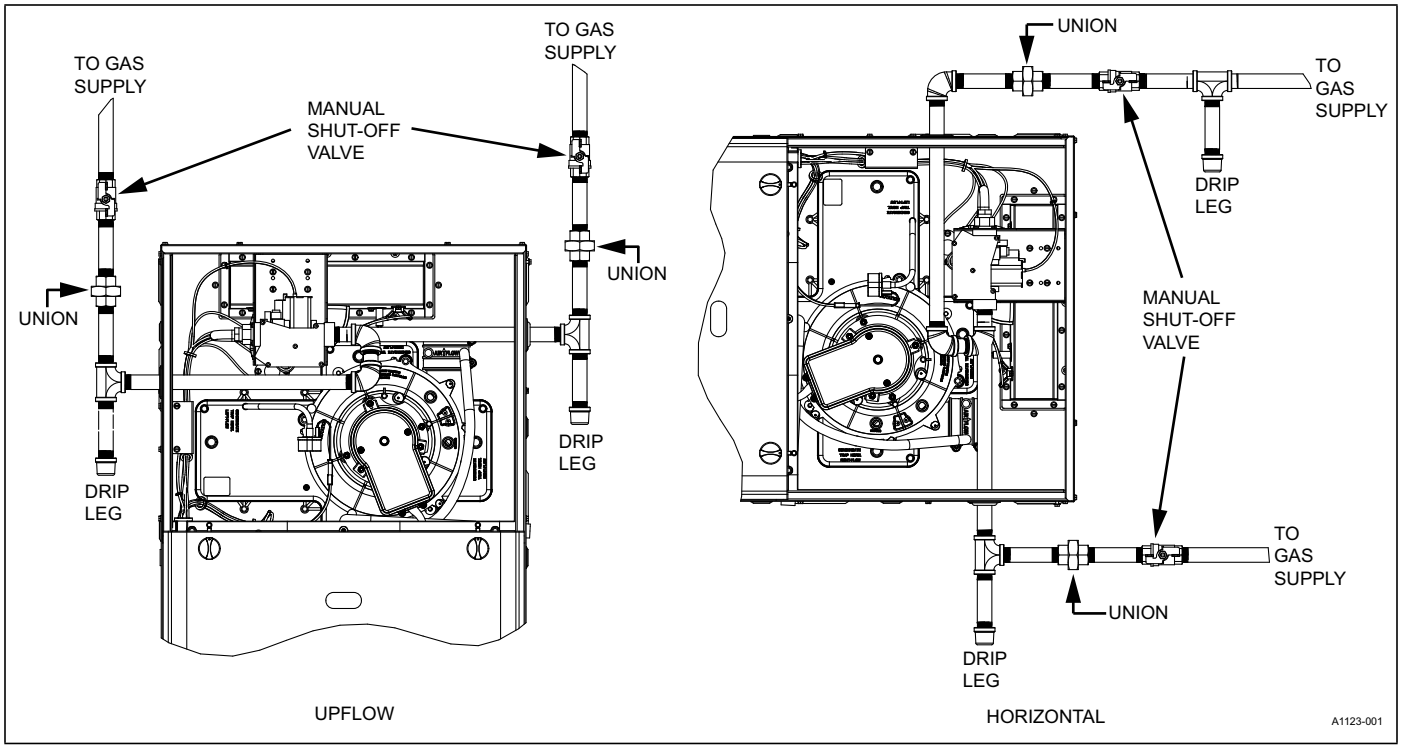

Figure 10: Gas Piping

IMPORTANT: An accessible manual shutoff valve must be installed upstream of the furnace gas controls and within 6 ft (1.8 m) of the furnace.

The furnace must be isolated from the gas supply piping system by closing its individual external manual shutoff valve during any pressure testing of the gas supply piping system at pressures equal to or less than 0.5 psig (3.5 kPa).

Gas piping can be connected from either side of the furnace using any of the gas pipe entry knockouts on both sides of the furnace. See Figures 6 and 10.

⚠ CAUTION

The gas valve body is a very thin casting that cannot take any external pressure. Never apply a pipe wrench to the body of the gas valve when installing piping. A wrench must be placed on the octagon hub located on the gas inlet side of the valve. Placing a wrench to the body of the gas valve will damage the valve causing improper operation and/or the valve to leak.

HIGH ALTITUDE

The TL9E060 furnace is constructed at the factory for natural gas-fired operation at 0 to 7,800 ft (0 to 2,377 m) above sea level. No adjustments are needed.

The TL9E080 and TL9E100 are constructed at the factory for natural gas-fired operation at 0 to 5,000 ft (0 to 1,524 m) with no adjustments needed. Above 5,000 ft (1,524 m), change the unit ID plug. Use the following high altitude accessory kits: S1-32552070000 for TL9E080, S1-32552071000 for TL9E100.

SECTION V: ELECTRICAL POWER

ELECTRICAL POWER CONNECTIONS

Field wiring to the unit must be grounded. Electric wires that are field installed must conform to the temperature limitation for 63°F (35°C) rise wire specified in these instructions. See Table 4 in these instructions for specific furnace electrical data.

⚠ CAUTION

Use copper conductors only.

Table 4: Ratings and Physical/Electrical Data

Input		Output		Nominal Airflow		AFUE	Air Temperature Rise		Maximum Outlet Air Temperature		Blower		Blower Size	Recommended Fuse or Circuit Breaker	Total Unit	Gas Pipe Connection, NPT
MBH	kW	MBH	kW	CFM	m^3/min	%	°F	°C	°F	°C	HP	A	in.	A	A	in.
60	17.6	57	16.7	1200	34.0	95.0	35–65	19–36	190	88	1/2	6.4	11x8	15	8.0	1/2
80	23.4	76	22.3	1600	45.3	95.0	35–65	19–36	190	88	3/4	8.8	11x10	15	10.4	1/2
100	29.3	95	27.8	2000	56.6	95.0	35–65	19–36	190	88	1	11.5	11x11	15	13.1	1/2

Notes:
Annual Fuel Utilization Efficiency (AFUE) numbers are determined in accordance with DOE test procedures.
Wire size and overcurrent protection must comply with the National Electrical Code (NFPA-70-latest edition) and all local codes.
The furnace must be installed so the electrical components are protected from water.

SUPPLY VOLTAGE CONNECTIONS

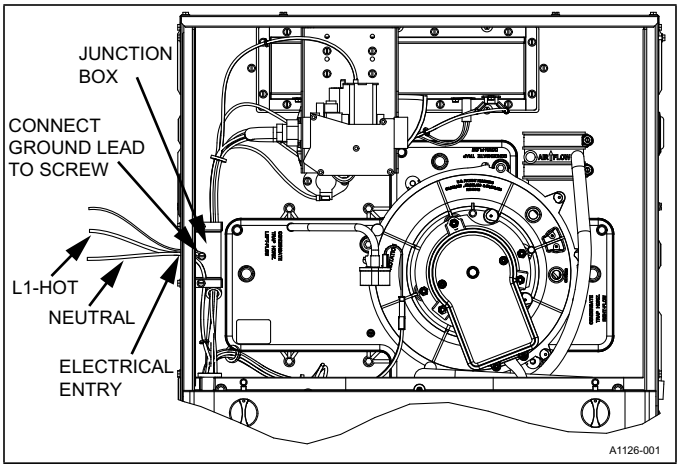

Figure 11: Electrical Wiring

1. Provide a power supply separate from all other circuits. Install overcurrent protection and disconnect switch per local/national electrical codes. The switch must be close to the unit for convenience in servicing. With the disconnect or fused switch in the OFF position, check all wiring against the unit wiring label. See the wiring diagram in this instruction.
2. Remove the wiring box cover screws. Route all power wiring through a conduit connector or other proper bushing that is field installed into the unit opening and the junction box. In the junction box there is a black wire, a white wire, and a green ground screw. Connect the power supply as shown on the unit's wiring label located on the inside of the blower compartment door, or the wiring schematic in this section. Connect the black wire to L1 (hot) from the power supply. Connect the white wire to neutral. Connect the ground wire (installer-supplied) to the green (equipment ground) screw. An alternate wiring method is to use a field-provided 2 in. (5.1 cm) x 4 in. (10.2 cm) box and cover on the outside of the furnace. Route the furnace leads into the box using a protective bushing where the wires pass through the furnace panel. After making the wiring connections, replace the wiring box cover and screws. Figure 11.
3. The furnace's control system requires correct polarity of the power supply and a proper ground connection. See Figure 11.

IMPORTANT: The power connection leads and wiring box can be relocated to the opposite side of the furnace. Remove the screws and cut wire tie holding excess wiring. Reposition on the opposite side of the furnace and fasten using holes provided.

LOW VOLTAGE CONTROL WIRING CONNECTIONS

Install the field-supplied thermostat by following the instructions that come with the thermostat. With the thermostat set in the OFF position and the main electrical source disconnected, connect the thermostat wiring from the wiring connections on the thermostat to the low-voltage terminal block on the integrated furnace control board, as shown in Figures 12, 13, and 14. Electronic thermostats require the common wire to be connected. Apply strain relief to thermostat wires passing through the cabinet. If air conditioning equipment is installed, use thermostat wiring to connect the Y and C terminals on the furnace control board to the correct wires on the outdoor unit.

IMPORTANT: Set the heat anticipator in the room thermostat to 0.4 A. Setting it lower causes short cycles. Setting it higher causes the room temperature to exceed the setpoints.

IMPORTANT: Some electronic thermostats do not have adjustable heat anticipators. They should be set to six cycles per hour. Follow the thermostat manufacturer's instructions.

The 24-V, 40-VA transformer is sized for the furnace components only, and must not be connected to power auxiliary devices such as humidifiers and air cleaners. The transformer can provide power for a split system air conditioner or heat pump.

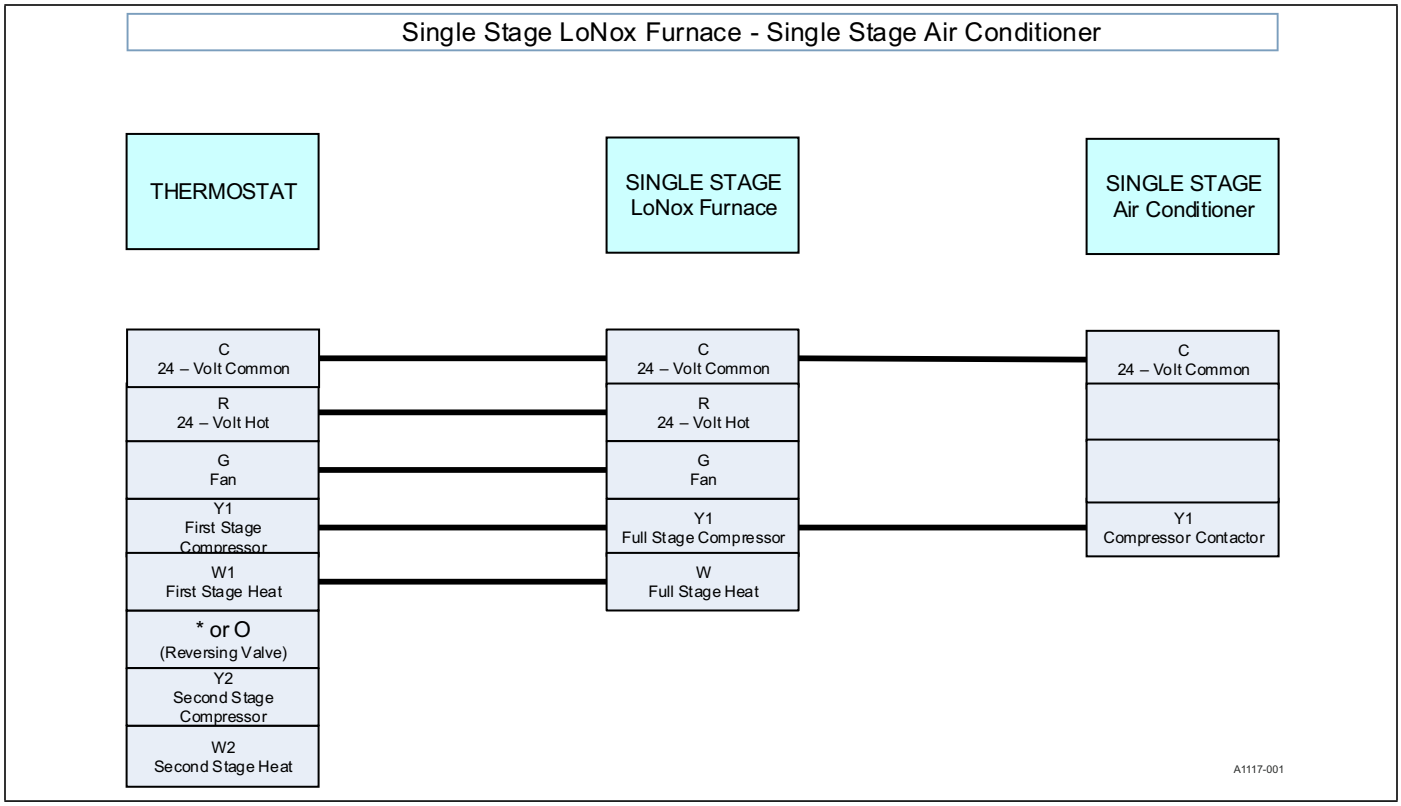

Figure 12: Thermostat Chart - Single-Stage AC with Single-Stage Furnaces

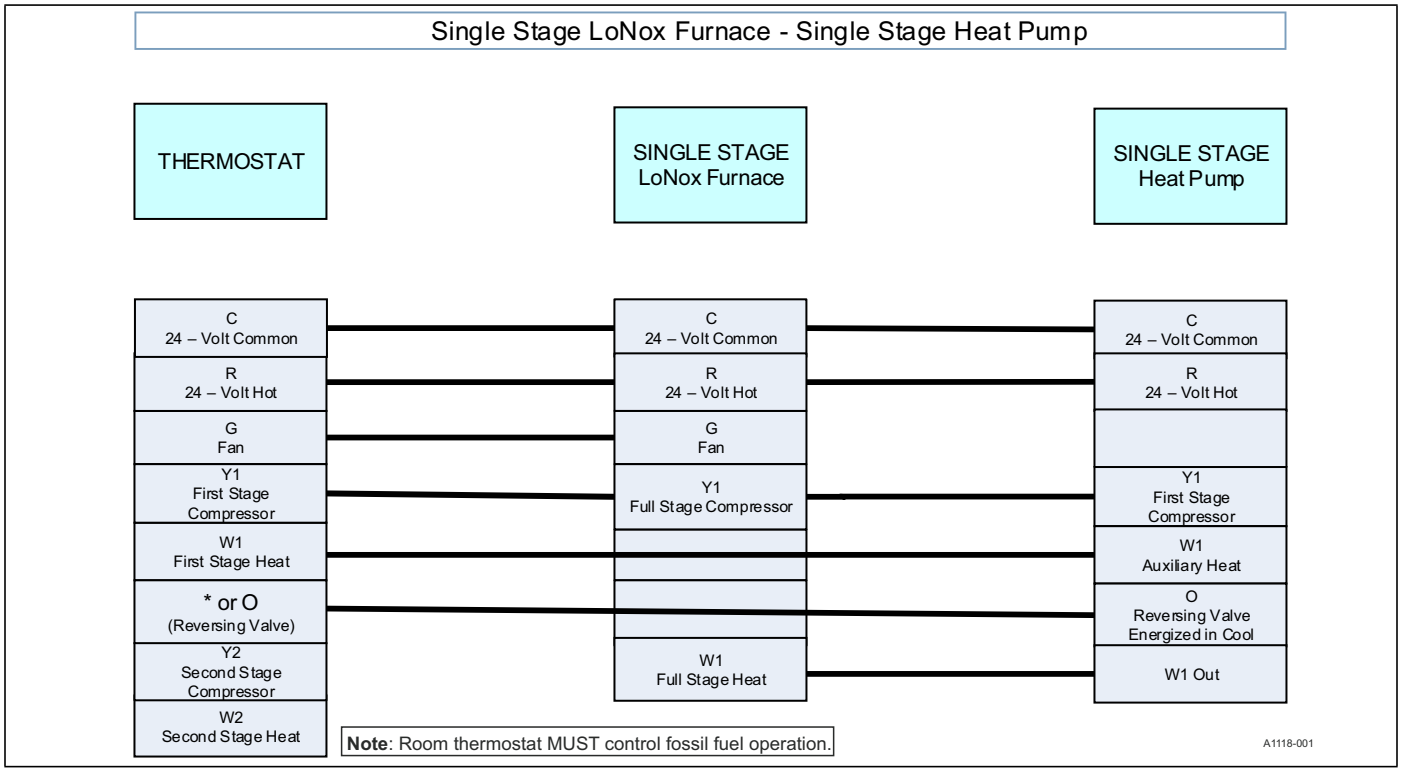

Figure 13: Thermostat Chart - Single-Stage HP with Single-Stage Furnaces

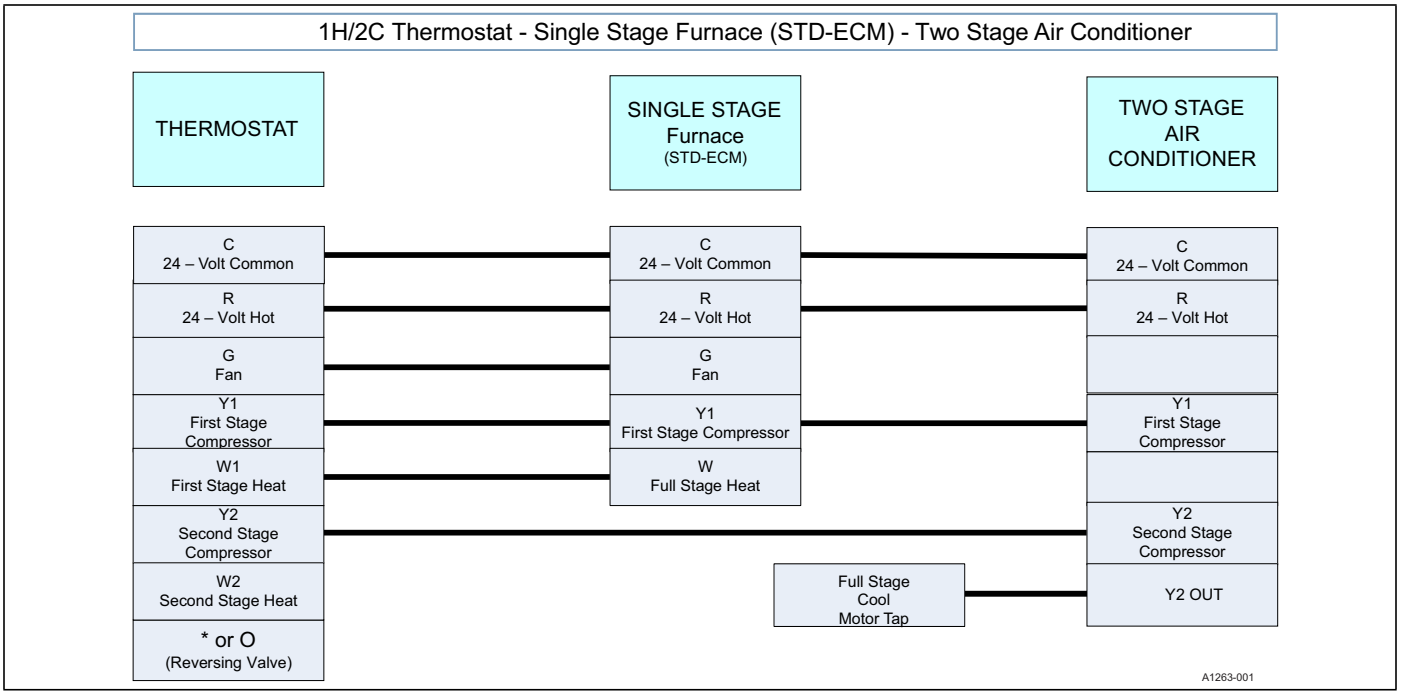

Figure 14: Thermostat Chart - 1H/2C - Single-Stage Furnace (STD-ECM) - Two-Stage Air Conditioner

ACCESSORY CONNECTIONS

The furnace control allows power-switching control of various accessories.

ELECTRONIC AIR CLEANER CONNECTION

Two 1/4 in. (6.4 mm) spade terminals (EAC and NEUTRAL) for electronic air cleaner connections are located on the control board. The terminals provide 115 VAC (1.0 A maximum) during circulating blower operation.

HUMIDIFIER CONNECTION

Two 1/4 in. (6.4 mm) spade terminals (HUM and NEUTRAL) for humidifier connections are located on the control board. The terminals provide 115 VAC (1.0 A maximum) during heating system operation.

A mounting hole is provided on the control panel next to the furnace control board for mounting a humidifier transformer if required.

TWINNING

These furnaces are not to be twinned. If more than one furnace is needed in an application, each furnace must have its own complete duct system and its own wall thermostat.

SECTION VI: CONDENSATE PIPING AND FURNACE VENTING CONFIGURATION

CONDENSATE DRAIN INSTALLATION

NOTICE

An external condensate trap is required. Failure to install the condensate trap supplied with this furnace will cause operational problems and could cause flue gas to be emitted into the home.

Upflow Installations

The condensate hose inside the furnace is equipped with a straight male threaded hose adapter. Push the threaded end through the hole in the casing side and attach the female threaded elbow supplied with the furnace. Connect the short piece of hose (supplied) and then connect the condensate trap (supplied). Attach the condensate trap to the side of the furnace with double-sided tape or by drilling two holes in the casing side and attaching the trap with No. 8 screws. Attach the short piece of hose (supplied) to the bottom outlet of the condensate trap. See Figure 15 for details.

Horizontal Installations

The condensate hose inside the furnace is equipped with a straight male threaded hose adapter. Remove that adapter and install the male threaded elbow included with the furnace. Push the threaded end through the hole in the furnace casing side. Attach short pieces of hose (supplied) to the top and bottom of the condensate trap (supplied). Attach the female straight hose adapter (supplied) to the hose connected to the top of the condensate trap. Screw the condensate trap to the condensate trap bracket (supplied). Then thread the hose adapters together below the furnace casing, using the threaded connection to support the condensate trap and bracket. See Figure 15 for details.

All Installations

After connecting the condensate trap as described above, it is necessary to connect the condensate drain line to a suitable disposal system. This can be rigid PVC pipe, flexible hose, or other suitable material. An appropriate field-supplied adapter is needed to make the connection between the condensate trap outlet hose and the final drain line material being used.

The condensate hose must slope downwards at all points.

When drain hose routing changes are required, make sure to cap all unused openings.

If rerouting hoses, cut off excess length so there are no sags or loops that collect condensate and prevent proper drainage, causing the furnace to not operate.

NOTICE

Figures 15 and 16 show the internal drain arrangement for the various possible furnace and drain positions.

IMPORTANT: The furnace, indoor coil, and humidifier drains can be combined and drained together. The indoor coil drain can have an external, field-supplied trap before the furnace drain connection to prevent conditioned air leakage. All drain connections (furnace, indoor coil, or humidifier) must be terminated into an open or vented drain as close to the respective equipment as possible. Regular maintenance is required on condensate drainage system.

IMPORTANT: Condensate must be disposed of correctly. Follow local plumbing or wastewater codes. The drain line must maintain a 1/4 in./ft (20 mm/m) downward slope to the drain.

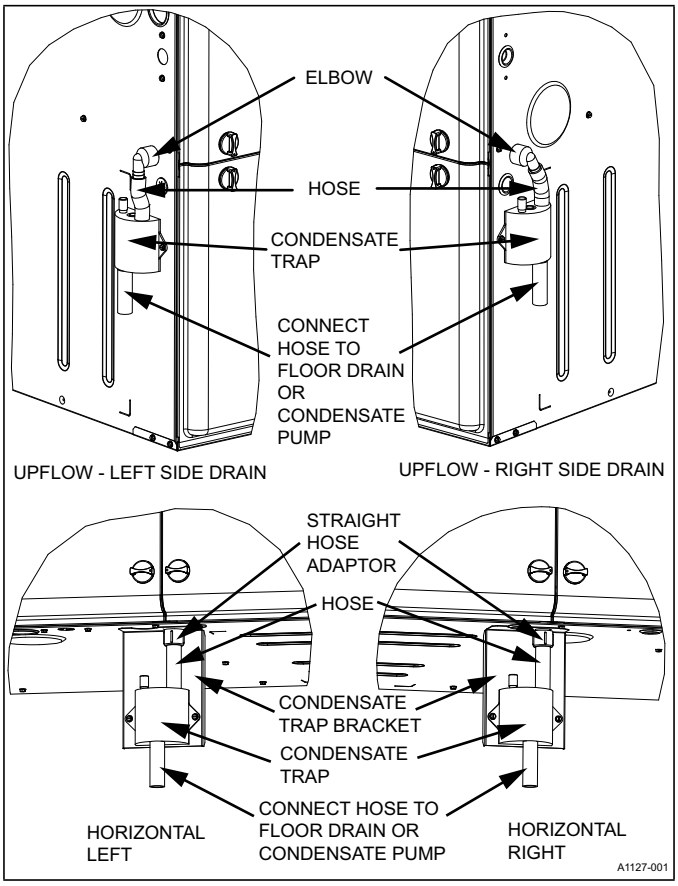

Figure 15: Typical - Condensate Drain, Vertical Installation

⚠ CAUTION

It is possible for condensation to form inside the combustion air (intake) pipe in the summer months if significant length of combustion air pipe passes through conditioned space. This problem can be averted by installing the supplied vent drain and drain hose located in the loose parts bag. The intake drain hose is to be installed by connecting it to the inlet pipe coupling and to the collector box as shown in Figures 16 and 17. The drain hose must not sag or droop after it is installed. If glue is used when connecting the intake pipe to the intake coupling, the drain opening in the vent drain must not be plugged. If the intake drain is used, the bird screen **cannot** be installed. This is only approved for upflow and horizontal applications when the intake pipe is located on the top of the furnace. This is true for all long horizontal venting in any furnace configuration. This will keep condensate from entering the furnace.

CONDENSATE DRAIN TERMINATION

Use a condensate sump pump if required by local codes or if no indoor floor drain is available. The condensate sump pump must be approved for use with acidic condensate.

⚠ WARNING

Liquid anti-freeze will cause damage to internal plastic parts of this furnace. **DO NOT attempt to winterize the furnace using liquid anti-freeze.**

⚠ WARNING

DO NOT terminate the condensate drain in a chimney, or where the drain line may freeze. If the drain line will be exposed to temperatures below freezing, adequate measures must be taken to prevent the drain line from freezing. Failure to provide proper protection from freezing can result in improper operation or damage to the equipment and possible property damage. When exposed to temperatures below freezing, use of a 3 to 6 watt per foot at 115 VAC, 40°F (4.4°C) self-regulating, shielded and waterproof heat tape is recommended on the drain line outside the furnace.

DO NOT trap the drain line at any location. The furnace has an external condensate trap.

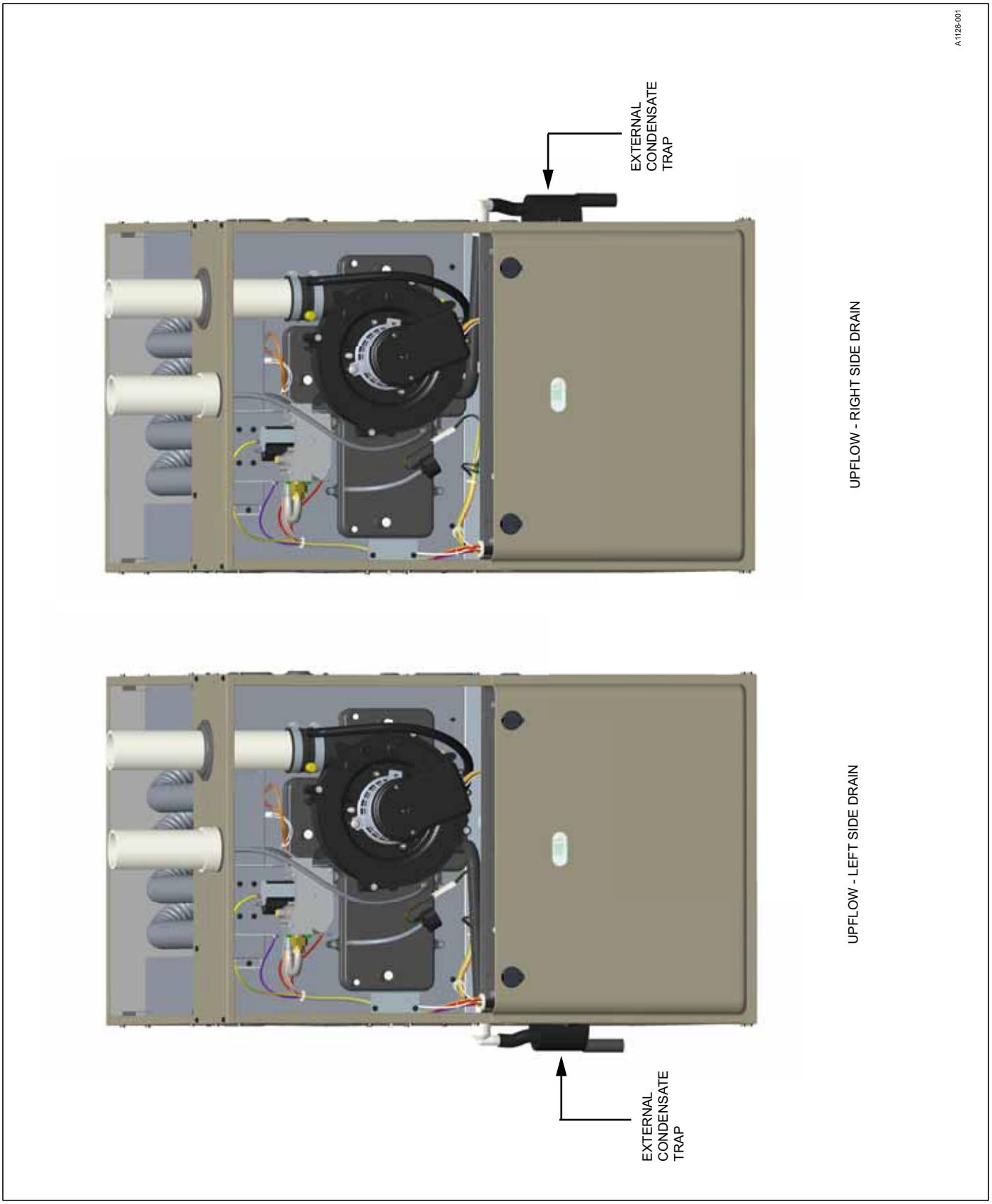

Figure 16: Upflow Configuration

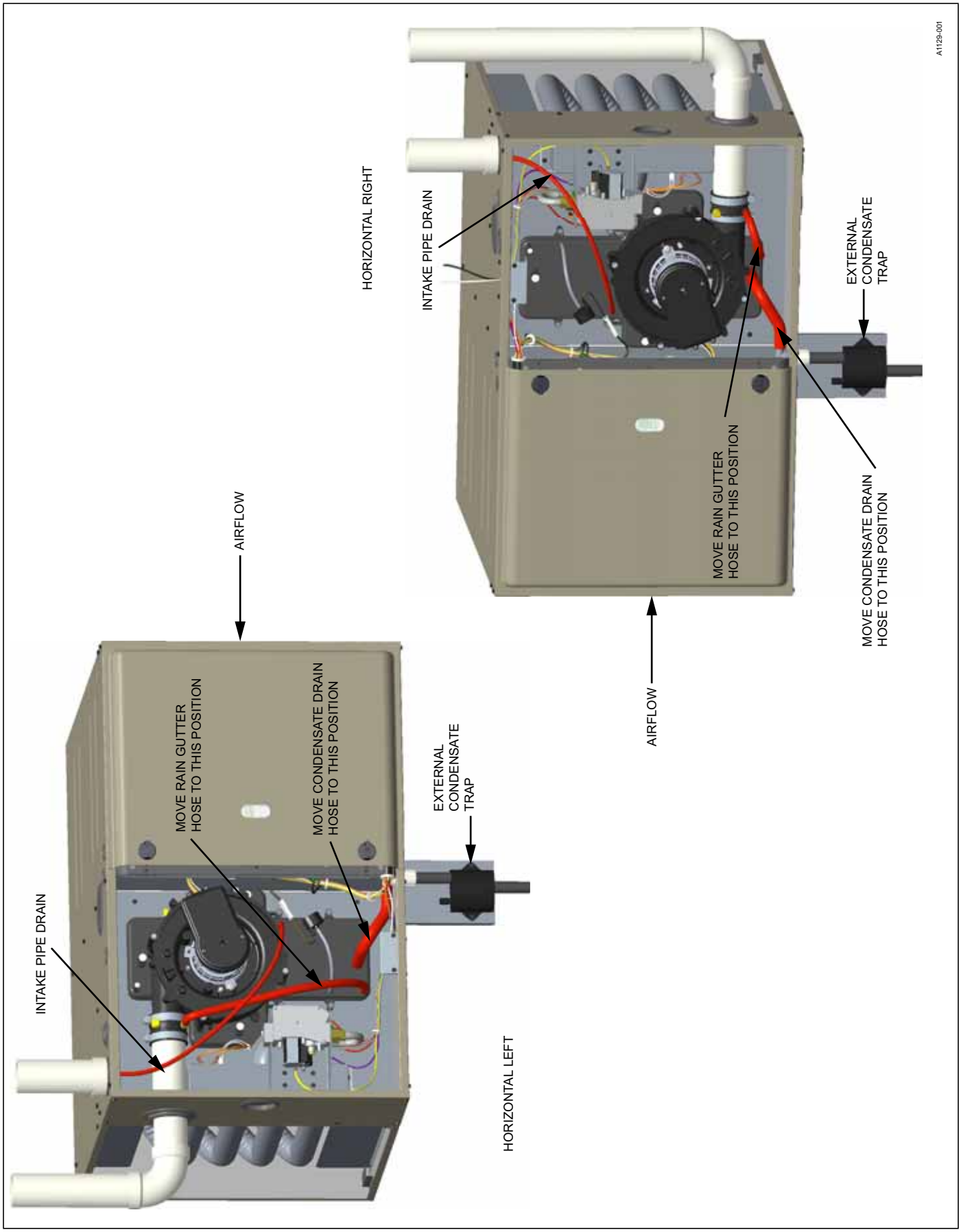

Figure 17: Horizontal Configuration

SECTION VII: COMBUSTION AIR AND VENT SYSTEM

COMBUSTION AIR AND VENT SAFETY

This Category IV, dual certified direct vent furnace is designed for residential application. It can be installed without modification to the condensate system in a basement, garage, equipment room, alcove, attic or any other indoor location where all required clearance to combustibles and other restrictions are met. The combustion air and the venting system must be installed in accordance with Section 5.3, Air for Combustion and Ventilation, of the National Fuel Gas Code Z223.1/NFPA 54 (latest edition) or Sections 7.2, 7.3, or 7.4 of CSA B149.1, National Gas and Propane Codes (latest edition), or applicable provisions of the local building code, and these instructions.

IMPORTANT: The vent system must be installed as specified in these instructions for residential and non-HUD modular homes. The direct vent system is the only configuration that can be installed in a non-HUD modular home.

⚠ WARNING

This furnace may not be common vented with any other appliance, since it requires separate, properly sized air intake and vent lines. The furnace shall not be connected to any type of B, BW, or L vent or vent connector, and not connected to any portion of a factory-built or masonry chimney.

The furnace shall not be connected to a chimney flue serving a separate appliance designed to burn solid fuel.

⚠ CAUTION

When combustion air pipe is installed above a suspended ceiling or when it passes through a warm and humid space, the pipe may need insulated if 2 ft or more of pipe is exposed.

Vent piping must be insulated if it will be subjected to freezing temperatures such as routing through unheated areas or through an unused chimney.

COMBUSTION AIR/VENT PIPE SIZING

The size of pipe required is determined by the furnace model, the total length of pipe required, and the number of elbows required.

Table 5 lists the maximum equivalent length of pipe allowed for each model of furnace. The equivalent length of pipe for each elbow installed is listed in Table 7.

Note: The equivalent length of the vent system is the total length of straight pipe plus the equivalent length of all of the elbows.

Adhere to the following rules:

- Drain, waste, and vent (DWV) elbows with a long radius (sweep) are recommended. Standard DWV elbows can be used, but because they have a longer equivalent length, they reduce the total length of pipe that is allowed. Short radius (plumbing or pressure) elbows are not allowed for venting. The standard dimensions of the acceptable elbows are shown in Figure 18.
- The maximum equivalent length listed in Table 5 is for the vent piping and the air intake piping separately. For example, if the table allows 65 equivalent ft for a particular model, the vent can have 65 equivalent ft of pipe, and the combustion air intake can have another 65 equivalent ft of pipe.
- Three vent terminal elbows (two for the vent and one for the combustion air intake) are already accounted for and do not need to be included in the equivalent length calculation.
- All PVC or ABS combustion air and vent pipe must conform to American National Standards Institute (ANSI) and American Society for Testing and Materials (ASTM) standards D1785 (Schedule 40 PVC), D2665 (PVC-DWV), F891 (PVC-DWV Cellular Core), D2261 (ABS-DWV) or F628 (Schedule 40 ABS). Pipe cement and primer must conform to ASTM Standard D2546 (PVC) or D2235 (ABS). If ABS pipe is used, any joint where ABS pipe is joined to PVC pipe must be glued with cement that is approved for use with BOTH materials. Metallic materials must not be used for venting or air intake.
- If a flexible connector is used in the vent system, it must be made of a material that is resistant to acidic exposure and to at least 225°F (107°C) temperature. Flexible connectors are also allowed in the combustion air pipe.
- All models are supplied with 2 in. (5.1 cm) vent connections. When the pipe must be increased to 3 in. (7.6 cm) diameter, the transition from 2 in. to 3 in. must be done as close to the furnace as possible. The 2 in. to 3 in. increase must be installed in the vertical position to avoid creating an area that pools water.
- In Canada, vents must be certified to ULC S636, Standard for Type BH Gas Venting Systems.
- In Canada, the first 3 ft (91.4 cm) of the vent must be readily accessible for inspection.
- For single-pipe systems, it is best practice to install the combustion air coupling provided and install approximately 18 in. (46 cm) of PVC pipe on the furnace.
- The minimum vent length for all models is 5 ft (1.5 m).

POLYPROPYLENE VENT/INTAKE PIPING

The ULC S636 approved polypropylene (PP) vent piping materials listed below have been tested and approved for use with this furnace. DO NOT mix parts made by different manufacturers. The entire vent/air intake system must be made from pipe, fittings, and termination made by the same manufacturer. Only single-wall rigid polypropylene pipe is approved for these furnaces. Use of flexible polypropylene pipe is not allowed.

Selkirk Polyflue (Hart &Cooley) part numbers

- Horizontal concentric termination - 2 in. - 2PF-HCT
- Horizontal concentric termination - 3 in. - 3PF-HCT
- Locking band - PF-LB

Consult the Polyflue installation instructions for assembly details. For other Polyflue pipe and fitting part numbers, visit www.polyflue.com.

Duravent Polypro part numbers

- Adapter to air intake coupling - 2PPS-ADL
- Adapter connector - PPS-PAC
- Twin pipe horizontal termination - 2 in. - 2PPS-HTPL
- Twin pipe horizontal termination - 3 in. - 3PPS-HTPL

Consult the Polypro installation instructions for assembly details. For other Polypro pipe and fitting part numbers, visit www.duravent.com.

Centrotherm Innoflue part numbers

- Adapter to air intake coupling - ISAGL0202
- Adapter to draft inducer blower - ISAAL0202
- Low profile wall termination - 2 in. - ISLPT0202
- Low profile wall termination - 3 in. - ISLPT0303

Consult the Innoflue installation instructions for assembly details. For other Innoflue pipe and fitting part numbers, visit www.centrotherm.us.com.

Table 5: Maximum Equivalent Pipe Length

Elevation Sea level–2000		
Model Input (BTUH)	Pipe Size (in.)	Max. Equivalent Length (ft)
60,000	2	65
60,000	3	90
60,000	4	150
80,000	2	65
80,000	3	90
80,000	4	150
100,000	2	30
100,000	3	90
100,000	4	150
Elevation 2001–4000		
Model Input (BTUH)	Pipe Size (in.)	Max. Equivalent Length (ft)
60,000	2	55
60,000	3	80
60,000	4	145
80,000	2	55
80,000	3	80
80,000	4	145
100,000	2	20
100,000	3	80
100,000	4	145
Elevation 4001–5000		
Model Input (BTUH)	Pipe Size (in.)	Max. Equivalent Length (ft)
60,000	2	50
60,000	3	75
60,000	4	140
80,000	2	50
80,000	3	75
80,000	4	140
100,000	2	15
100,000	3	75
100,000	4	140
Elevation 5001–7800		
Model Input (BTUH)	Pipe Size (in.)	Max. Equivalent Length (ft)
60,000	2	45
60,000	3	70
60,000	4	135
80,000	2	35
80,000	3	70
80,000	4	135
100,000	2	10
100,000	3	70
100,000	4	135

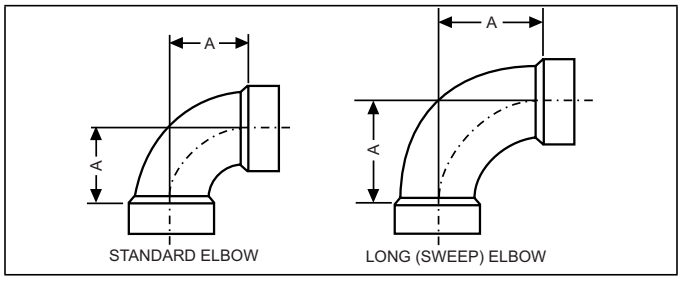

Figure 18: Elbow Dimensions

Table 6: Elbow Dimensions

Elbow	A Dimension (Illustrated in Figure 18)
2 in. Standard	2 5/16 in.
3 in. Standard	3 1/16 in.
2 in. Sweep	3 1/4 in.
3 in. Sweep	4 1/16 in.

Note: Dimensions are those required in Standard ASTM D-3311.

Table 7: Equivalent Length of Fittings

Fitting	Equivalent Length
2 in. 90° sweep elbow	5 ft of 2 in. pipe
2 in. 45° sweep elbow	2 1/2 ft of 2 in. pipe
2 in. 90° standard elbow	7 ft of 2 in. pipe
2 in. 45° standard elbow	3 1/2 ft of 2 in. pipe
3 in. 90° sweep elbow	5 ft of 3 in. pipe
3 in. 45° sweep elbow	2 1/2 ft of 3 in. pipe
3 in. 90° standard elbow	7 ft of 3 in. pipe
3 in. 45° standard elbow	3 1/2 ft of 3 in. pipe
4 in. 90° elbow (sweep or standard)	5 ft of 4 in. pipe
4 in. 45° elbow (sweep or standard)	2 1/2 ft of 4 in. pipe
2 in. corrugated connector	10 ft of 2 in. pipe
3 in. corrugated connector	10 ft of 3 in. pipe
4 in. corrugated connector	10 ft of 4 in. pipe

Example:

An 80,000 BTUH furnace requires 32 ft of pipe and five 90º elbows. Using 2 in. pipe and standard elbows, the total equivalent length is:

32 ft of 2 in. pipe =	32 equivalent ft
5 - 90º standard 2 in. elbows = (5 x 7) =	35 equivalent ft
Total =	67 equivalent ft of 2 in. pipe

This exceeds the 65 ft maximum equivalent length of 2 in. pipe allowed for that model and is <u>not</u> acceptable.

By using sweep elbows, the total equivalent length is:

32 ft of 2 in. pipe =	32 equivalent ft
5 - 90º sweep 2 in. elbows = (5 x 5) =	25 equivalent ft
Total =	57 equivalent ft of 2 in. pipe

This is less than the 65 ft maximum equivalent length of 2 in. pipe allowed for that model and is acceptable.

Alternatively, using 3 in. pipe and standard elbows, the total equivalent length is:

32 ft of 3 in. pipe =	32 equivalent ft
5 - 90º standard 3 in. elbows = (5 x 7) =	35 equivalent ft
Total =	67 equivalent ft of 3 in. pipe

This is less than the 90 ft maximum equivalent length of 3 in. pipe allowed for that model and is acceptable.

Table 8: Combustion Air Intake and Vent Connection Size at Furnace (All Models)

FURNACE VENT CONNECTION SIZES	
Furnace Input	All
Intake Pipe Size	2 in. (5.1 cm)
Vent Pipe Size	2 in. (5.1 cm)

IMPORTANT: Furnace vent pipe connections are sized for 2 in. (5.1 cm) pipe. Any pipe size change must be made outside the furnace casing in a vertical pipe section to allow proper drainage of condensate. An offset using two 45º (degree) elbows is required for plenum clearance when the vent is increased to 3 in. (7.6 cm).

IMPORTANT: Accessory concentric vent/intake termination kits 1CT0302 and 1CT0303, and for Canadian applications 1CT0302-636 and 1CT0303-636 are available and approved for use with these furnaces. Horizontal sidewall vent terminations kits 1HT0901 and 1HT0902 are also approved for use with these furnaces.

COMBUSTION AIR AND VENT PIPING ASSEMBLY

The final assembly procedure for the combustion air and vent piping is as follows:

1. Cut piping to the correct length beginning at the furnace.
2. Deburr the piping inside and outside.
3. Chamfer (bevel) the outer edges of the piping.
4. Dry-fit the vent piping assembly from the furnace to the outside termination, checking for proper fit, support, and slope.
5. Dry-fit the combustion air piping assembly, checking for proper fit, support, and slope on the following systems:
   a. Sealed combustion air systems from the furnace to the outside termination
   b. Ventilated combustion air systems from the furnace to the attic or crawl space termination

⚠ CAUTION

Solvent cements are flammable and must be used in well-ventilated areas only. Keep them away from heat, sparks and open flames. Do not breathe vapors and avoid contact with skin and eyes.

6. Disassemble the combustion air and vent piping and apply cement primer and the cement per the manufacturer's instructions. Primer and cement must conform to ASTM D2564 for PVC or ASTM D2235 for ABS piping.
7. All joints must provide a permanent airtight and watertight seal.
8. Install the combustion air and vent piping such that it has a 1/4 in./ft (21 mm/m) grade so that condensate flows back toward the furnace. Piping must be supported with pipe hangers to prevent sagging.
9. Seal around the openings where the combustion air and/or vent piping pass through the roof or sidewalls.

COMBUSTION AIR/VENTING

IMPORTANT: The vent must be installed with the minimum required clearances, and must comply with local codes and requirements.

VENT CLEARANCES

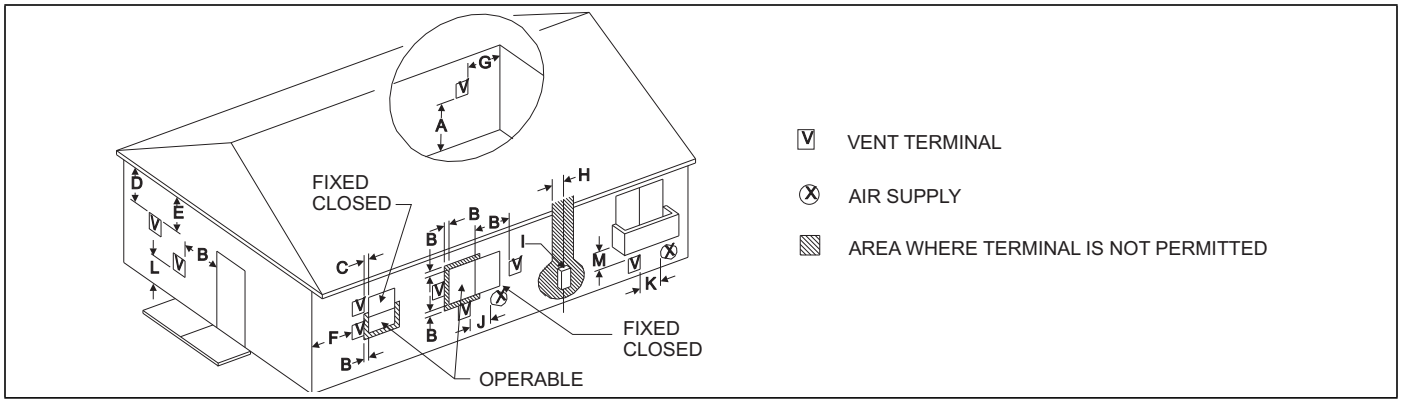

Figure 19: Home Layout

Direct Vent Terminal Clearances	Canadian Installations[1,3]	US Installation[2,3]
A. Clearance above grade, veranda, porch, deck, or balcony	12 in. (30.5 cm)	12 in. (30.5 cm)
B. Clearance to window or door that can be opened	12 in. (30.5 cm) for models ≤100,000 BTUH (30 kW) 36 in. (91.4 cm) for models >100,000 BTUH (30 kW)	Two-pipe (direct vent) applications: 12 in. (30.5 cm)†† Single-pipe applications: 4 ft (1.2 m)
C. Clearance to permanently closed window	12 in. (30.5 cm)	12 in. (30.5 cm)
D. Vertical clearance to ventilated soffit located above the terminal within a horizontal distance of 2 ft (61 cm) from the center line of the terminal	12 in. (30.5 cm) or in accordance with local installation codes and the requirements of the gas supplier	12 in. (30.5 cm) or in accordance with local installation codes and the requirements of the gas supplier
E. Clearance to unventilated soffit	12 in. (30.5 cm) or in accordance with local installation codes and the requirements of the gas supplier	12 in. (30.5 cm) or in accordance with local installation codes and the requirements of the gas supplier
F. Clearance to outside corner	12 in. (30.5 cm) or in accordance with local installation codes and the requirements of the gas supplier	12 in. (30.5 cm) or in accordance with local installation codes and the requirements of the gas supplier
G. Clearance to inside corner	3 ft (91.4 cm)	3 ft (91.4 cm)
H. Clearance to each side of center line extended above meter/regulator assembly	Above a meter/regulator assembly within 3 ft (91.4 cm) horizontally of the vertical center-line of the regulator vent outlet to a maximum vertical distance of 15 ft (4.5 m) above the meter/regulator assembly	Above a meter/regulator assembly within 3 ft (91 cm) horizontally of the vertical center-line of the regulator vent outlet to a maximum vertical distance of 15 ft (4.5 m) above the meter/regulator assembly
I. Clearance to service regulator vent outlet	3 ft (91.4 cm)	3 ft (91.4 cm) or in accordance with local installation codes and the requirements of the gas supplier
J. Clearance to non-mechanical air supply inlet to building or the combustion air inlet to any other appliance	12 in. (30.5 cm) for models ≤100,000 BTUH (30 kW) 36 in. (91 cm) for models >100,000 BTUH (30 kW)	Two-pipe (direct vent) applications: 12 in. (30.5 cm) Single-pipe applications: 4 ft (1.2 m)
K. Clearance to a mechanical supply inlet	6 ft (1.83 m)	3 ft (91.4 cm) above if within 10 ft (3 m) horizontally
L. Clearance above paved sidewalk or paved driveway located on public property	7 ft (2.13 m)†	7 ft (2.13 m) or in accordance with local installation codes and the requirements of the gas supplier
M. Clearance under veranda, porch, deck, or balcony	12 in. (30.5 cm)‡	12 in. (30.5 cm) or in accordance with local installation codes and the requirements of the gas supplier

1. In accordance with the current CSA B149.1-00, Natural Gas and Propane Installation Code.
2. In accordance with the current ANSI Z223.1 / NFPA 54, National Gas Code.
3. In accordance with the current ANSI Z21.47 * CSA 2.3 American National Standard.

† A vent must not terminate directly above a sidewalk or paved driveway that is located between two single family dwellings and serves both dwellings.

†† 12 in. (30.5 cm) up from the bottom edge of the structure for two-pipe (direct vent) applications per ANSI Z223.1 / NFPA 54, National Gas Code.

‡ Permitted only if veranda, porch, deck, or balcony is fully open on a minimum of two sides beneath the floor and the distance between the top of the vent termination and the underside of the veranda, porch, or deck is greater than 12 in. (30.5 cm) as specified in CSA B149.1-00.

Notes: A vent must not terminate less than 12 in. (30.5 cm) above a grade level.
Any fresh air or make up inlet for dryer or furnace area is considered to be forced air inlet.
Avoid areas where condensate drippage may cause problems such as above planters, patios, or adjacent to windows where steam can cause fogging.
Fit a terminus of a vent with a cap in accordance with the vent manufacturer's installation instructions or the installation instructions for a special venting system.
Responsibility for the provision of proper adequate venting and air supply for application rests with the installer.
Vent must extend high enough above building or a neighboring obstruction so wind from any direction does not create a positive pressure in the vicinity of the vent.

IMPORTANT: Consideration must be given for degradation of building materials by flue gases. Sidewall termination may require sealing or shielding of building surfaces with a corrosion resistant material to protect against combustion product corrosion. Consideration must be given to wind direction to prevent flue products and/or condensate from being blown against the building surfaces. If a metal shield is used, it must be a stainless steel material at a minimum dimension of 20 in. (51 cm). It is recommended that a retaining type collar be used that is attached to the building surface to prevent movement of the vent pipe.

VENT SYSTEM

Install this furnace using one of the following vent configurations:

- Horizontal vent system. This vent system can be installed completely horizontal or combinations of horizontal, vertical, or offset using elbows.
- Vertical vent system. This vent system can be installed completely vertical or a combination of horizontal, vertical, or offset using elbows.

VENT APPLICATIONS AND TERMINATION

When selecting the location for a combustion air/vent termination, consider the following:

- Observe all clearances listed in the VENT CLEARANCES section in these instructions.
- Termination must be positioned where vent vapors do not damage plants, shrubs, or air conditioning equipment.
- Termination must be located where it is not affected by wind gusts, light snow, or airborne leaves and does not allow recirculation of flue gases.
- Termination must be located where it is not subject to damage or exposure to flying stones and balls.
- Termination must be positioned where vent vapors are not objectionable.
- Horizontal portions of the vent system must slope upwards and be supported to prevent sagging.
- Direct vent systems must be installed so the vent and the combustion air pipes terminate in the same atmospheric zone. See Figures 21 and 22.

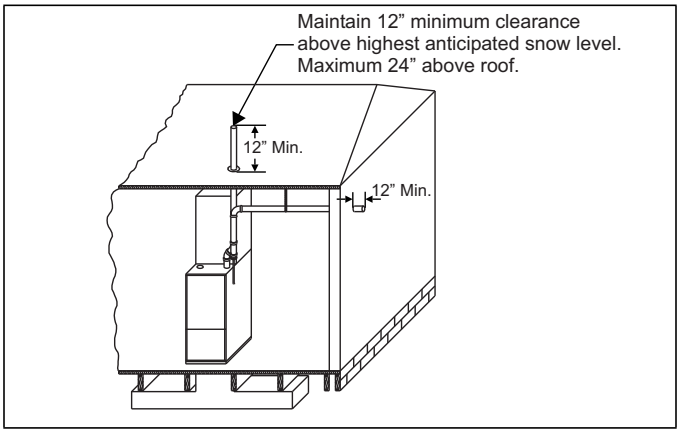

Figure 20: Termination Configuration - 1 Pipe

⚠ WARNING

Condensation in Intake Pipe

Installations where the furnace and intake pipe are to be located in a conditioned space and in a region that may have hot, humid weather extending several consecutive days will have condensate form in the intake pipe. Use of the supplied intake drain will ensure that any condensate will be safely diverted away from the internal components of the furnace. Proper venting installation (of both intake and exhaust) and sealing any equipment air leaks that might contact the intake pipe will help reduce condensation.

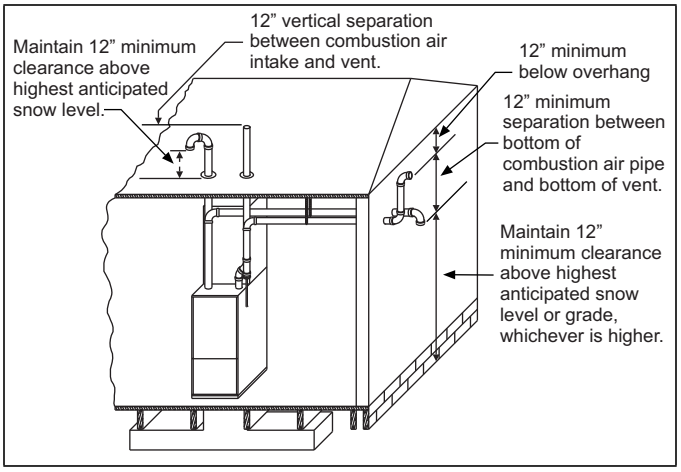

Figure 21: Termination Configuration - 2 Pipe

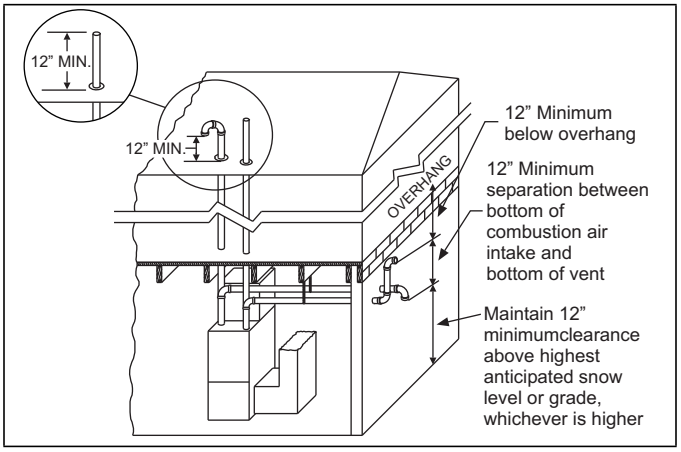

Figure 22: Termination Configuration - 2 Pipe Basement

VENTING MULTIPLE UNITS

Multiple units can be installed in a space or structure as either a single-pipe configuration or a two-pipe configuration.

The combustion air side of the single-pipe configuration shown in Figures 20 and 28 is referred to in these instructions as ambient combustion air supply. Follow the instructions for ambient combustion air installations, paying particular attention to the information on air source from inside the building in the Ambient Combustion Air Supply section. The vent for a single-pipe system must be installed as specified in the VENT APPLICATIONS AND TERMINATION section with both vents terminating as shown in Figures 23 to 24. Each furnace must have a separate vent pipe. Under NO circumstances can the two vent pipes be tied together.

The combustion air side of the two-pipe configuration shown in Figures 23 and 24 can be installed so the combustion air pipe terminates as described in the Outdoor Combustion Air section or the Ventilated Combustion Air section. Follow the instructions for outdoor combustion air or ventilated combustion air and the instructions for installing the vent system with the vent terminating as shown in Figures 23 and 24. The two-pipe system must have a separate combustion air pipe and a separate vent pipe for each furnace. Under NO circumstances can the two combustion air or vent pipes be tied together. The combustion air and vent pipes must terminate in the same atmospheric zone.

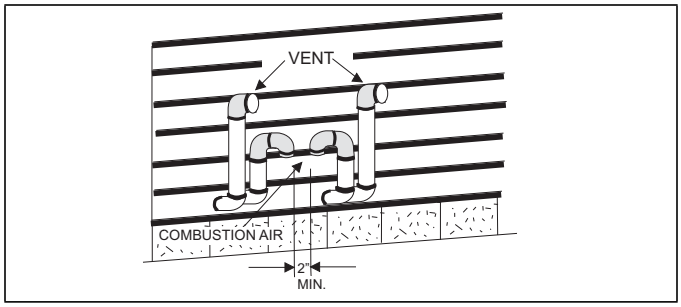

Figure 23: Double Horizontal Combustion Air Intake and Vent Termination

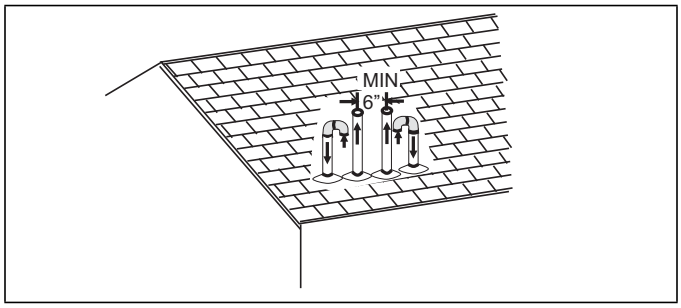

Figure 24: Double Vertical Combustion Air Intake and Vent Termination

DOWNWARD VENTING

In some applications, it may be necessary to run the vent pipe and air intake downwards. If this is to be done, adhere to the following rules:

- A condensate trap hose must be connected to both the air intake pipe and the vent pipe at the lowest part of the horizontal run.
- The condensate drain trap must have a trap of a minimum of 6 in.
- The total vertical downward distance must not exceed 16 ft.
- The condensate drain hose must be connected to a condensate drain pump, to an open or vented drain, or into the condensate drain line from the furnace.
- The condensate drain lines must not pass through unconditioned spaces where the temperature may fall below freezing.
- The condensate drain lines must be primed at the initial start-up before the start of heating season.

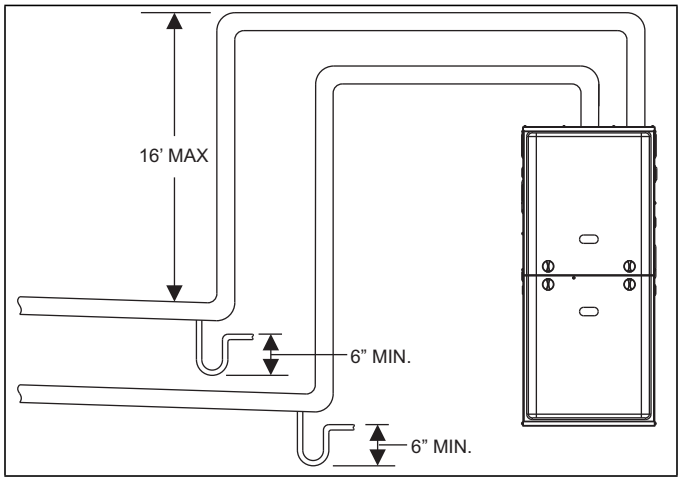

Figure 25: Downward Venting

COMBUSTION AIR SUPPLY

All installations must comply with Section 5.3, Air for Combustion and Ventilation of the National Fuel Gas Code, ANSI Z223.1 or Sections 7.2, 7.3, or 7.4 of CAN/CGA B149.1 or B149.2 Installation Code - latest editions.

Install this furnace using one of the following combustion air intake configurations.

- **OUTDOOR COMBUSTION AIR:** This is a direct vent configuration where the combustion air is supplied through a PVC or ABS pipe that is connected to the PVC coupling attached to the furnace and is terminated in the same atmospheric zone as the vent. This type of installation is approved on all models. See Figures 21 and 22.
- **AMBIENT COMBUSTION AIR:** Combustion air is supplied from the area surrounding the furnace through openings in the furnace casing. The combustion air and the vent pipes are not terminated in the same atmospheric zone. See Figure 20 for vent terminations. See the Ambient Combustion Air Supply section for proper installation. See Figure 28.
- **VENTILATED COMBUSTION AIR:** Combustion air is supplied through a PVC or ABS pipe that is connected to the PVC coupling attached to the burner box and is terminated in a ventilated attic or crawl space. The combustion air and the vent pipes are not terminated in the same atmospheric zone. See Figure 29 for attic and crawl space termination. Only the combustion air intake can terminate in the attic. The vent must terminate outside.

Outdoor Combustion Air

Combustion Air Intake/Vent Connections

This installation requires combustion air to be brought in from outdoors. This requires a correctly sized pipe (shown in Figure 25) that brings air in from the outdoors to the furnace combustion air intake collar on the burner box. The second pipe (shown in Figure 25) is the furnace vent pipe.

NOTICE

An optional plastic birdscreen is shipped in the loose parts bag with every furnace. This can be installed in the intake collar to prevent any small objects from entering the furnace. The birdscreen cannot be used if the intake drain is installed.

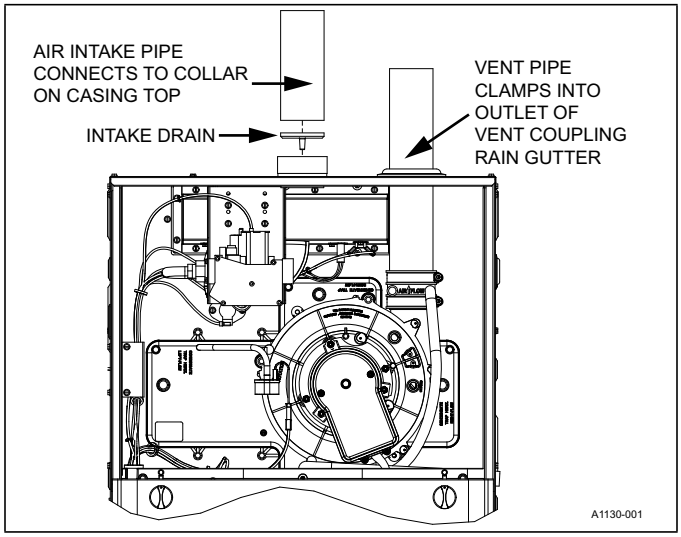

Figure 26: Direct Vent Air Intake Connection and Vent Connection

The combustion air intake pipe must be located either through the wall (horizontal or side vent) or through the roof (vertical vent). Care must be taken to locate side vented systems where trees or shrubs do not block or restrict supply air from entering the terminal.

The terminal assembly must be located as far as possible from a swimming pool or a location where swimming pool chemicals might be stored. Make sure the terminal assembly follows the outdoor clearances listed in the VENT APPLICATIONS AND TERMINATION section.

Ambient Combustion Air Supply

This type of installation draws the air required for combustion from within the space surrounding the appliance and from areas or rooms adjacent to the space surrounding the appliance. This can be from within the space in a non-confined location or it can be brought into the furnace area from outdoors through permanent openings or ducts. It is not piped directly into the furnace. Provide a single, correctly sized pipe from the furnace vent connector to the outdoors. It is best practice to attach the supplied intake coupling and 18 in. of pipe to the furnace to prevent accidental blockage of the combustion air intake.

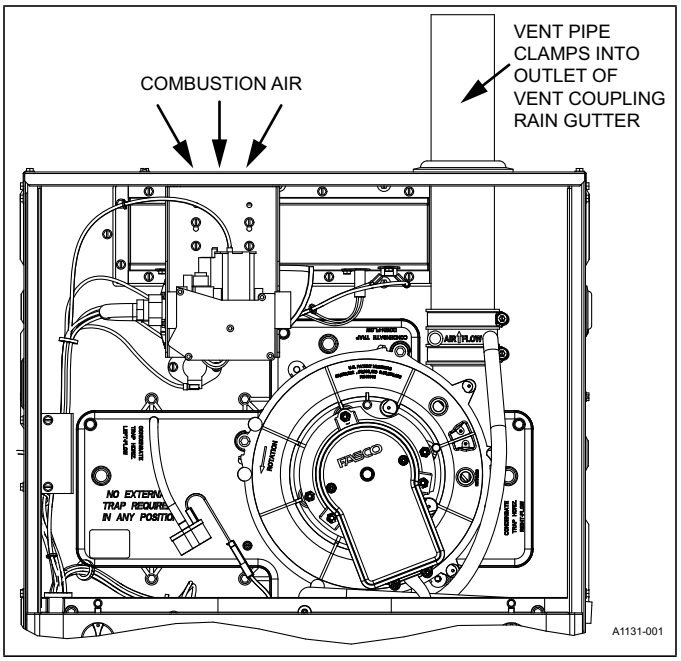

Figure 27: Combustion Airflow Path Through the Furnace Casing

⚠ WARNING

This type of installation requires that the supply air to the appliance(s) be of a sufficient amount to support all of the appliance(s) in the area. Operation of a mechanical exhaust, such as an exhaust fan, kitchen ventilation system, clothes dryer or fireplace may create conditions requiring special attention to avoid unsatisfactory operation of gas appliances. A venting problem or a lack of supply air will result in a hazardous condition, which can cause the appliance to soot and generate dangerous levels of CARBON MONOXIDE, which can lead to serious injury, property damage, and/or death.

An **unconfined space** is not less than 50 cu. ft (1.42 m^3) per 1,000 BTU/hr (0.293 kW/h) input rating for all of the appliances installed in that area.

Rooms communicating directly with the space containing the appliances are considered part of the unconfined space, if doors are furnished with openings or louvers.

A **confined space** is an area with less than 50 cu. ft (1.42 m^3) per 1,000 BTU/hr (0.293 kW/h) input rating for all of the appliances installed in that area. The following must be considered to obtain proper air for combustion and ventilation in confined spaces.

Dampers, Louvers, and Grilles

The blocking effects of louvers, grilles, and screens must be given consideration in calculating free area. If the free area of a specific louver or grille is not known, see Table 9 to estimate free area.

Table 9: Estimated Free Area

Wood or Metal Louvers or Grilles	Wood 20–25%* Metal 60–70% *
Screens+	1/4 in. (6.4 mm) mesh or larger 100%

* Do not use less than 1/4 in. (6.4 mm) mesh.

\+ Free area of louvers and grille varies widely. Follow the louver or grille manufacturer's instructions.

- The free area of a supply air opening must be calculated by subtracting the blockage area of all fixed louvers grilles or screens from the gross area of the opening.
- Apertures in a fixed louver, grille, or screen must have no dimension smaller than 1/4 in. (6.4 mm).
- A manually operated damper or manually adjustable louvers are not permitted for use.
- An automatically operated damper or automatically adjustable louvers must be interlocked so the main burner can not operate unless either the damper or the louver is in the fully open position.

⚠ WARNING

When a Category I furnace is removed or replaced, the original venting system may no longer be correctly sized to properly vent the attached appliances.

An improperly sized vent system can cause CARBON MONOXIDE to spill into the living space causing personal injury and/or death.

Table 10: Unconfined Space Minimum Area

BTUH Input Rating	Minimum Free Area Required for Each Opening
60,000	60 in^2 (387 cm^2)
80,000	80 in^2 (516 cm^2)
100,000	100 in^2 (645 cm^2)

Table 11: Free Area

BTUH Input Rating	Minimum Free Area Required for Each Opening		
	Horizontal Duct (2,000 BTUH)	Vertical Duct or Opening to Outside (4,000 BTUH)	Round Duct (4,000 BTUH)
60,000	30 in^2 (193 cm^2)	15 in^2 (97 cm^2)	5 in. (13 cm)
80,000	40 in^2 (258 cm^2)	20 in^2 (129 cm^2)	5 in. (13 cm)
100,000	50 in^2 (322 cm^2)	25 in^2 (161 cm^2)	6 in. (15 cm)

EXAMPLE: Determining Free Area.

Appliance 1 Appliance 2 Total Input
100,000 + 30,000 = (130,000 ÷ 4,000) = 32.5 sq. in. vertical
Appliance 1 Appliance 2 Total Input
100,000 + 30,000 = (130,000 ÷ 2,000) = 65 sq. in. horizontal

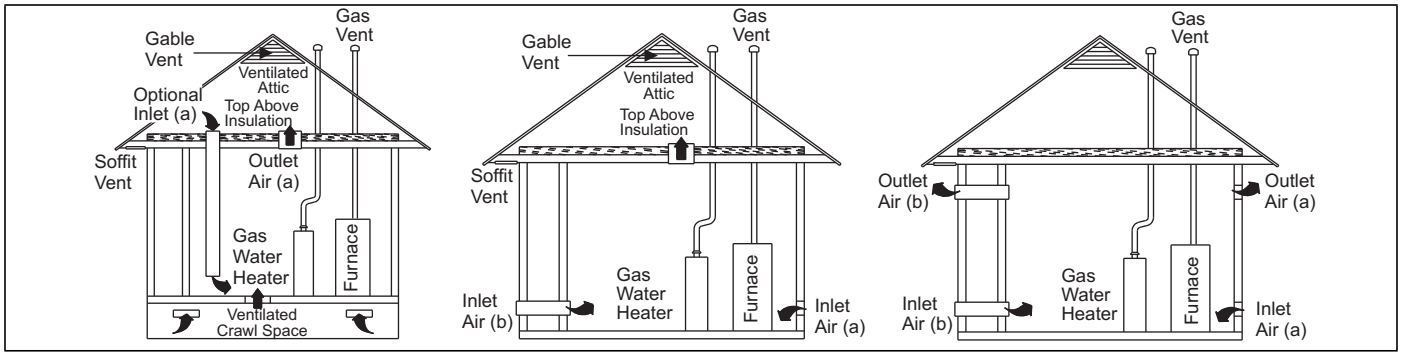

Figure 28: Ambient Combustion Air

Air Supply Openings and Ducts

- An opening can be used in lieu of a duct to provide the outside air supply to an appliance unless otherwise permitted by the authority having jurisdiction. The opening must be located within 12 in. (30.5 cm) horizontally from the burner level of the appliance. See the Combustion Air Source from Outdoors section and the COMBUSTION AIR AND VENT SAFETY section for additional information, and see the venting safety check procedure on the following page.
- The duct must be either metal or a material meeting the class 1 requirements of CAN4-S110 Standard for Air Ducts.
- The duct must be least the same cross-sectional area as the free area of the air supply inlet opening to which it connects.
- The duct must terminate within 12 in. (30.5 cm) above and 24 in. (61 cm) horizontally from the burner level of the appliance having the largest input.
- A square or rectangular shaped duct must only be used when the required free area of the supply opening is 9 in^2 (58.06 cm^2) or larger. When a square or rectangular duct is used, its small dimension must not be less than 3 in. (7.6 cm).
- An air inlet supply from outdoors must be equipped with a means to prevent the direct entry of rain and wind. Such means must not reduce the required free area of the air supply opening.
- An air supply inlet opening from the outdoors must be located not less than 12 in. (30.5 cm) above the outside grade level.

Combustion Air Source from Outdoors

- Two permanent openings, one within 12 in. (30.5 cm) of the top and one within 12 in. (30.5 cm) of the bottom of the confined space, must communicate directly or by means of ducts with the outdoors, crawl spaces, or attic spaces.
- One permanent opening, commencing within 12 in. (30.5 cm) of the top of the enclosure, is permitted where the equipment has clearances of at least 1 in. (2.54 cm) from the sides and back and 6 in. (15.2 cm) from the front of the appliance. The opening must communicate directly with the outdoors and have a minimum free area of:
  - 1 $in.^2$/3,000 BTU/hr (700mm2/kW) of the total input rating of all equipment located in the enclosure
  - Not less than the sum of all vent connectors in the confined space
- The duct must be least the same cross-sectional area as the free area of the air supply inlet opening to which it connects.
- The blocking effects of louvers, grilles, and screens must be given consideration in calculating free area. If the free area of a specific louver or grille is not known, see Table 9.

Ventilated Combustion Air

The ventilated attic space or crawl space from which the combustion air is taken must comply with the requirements specified in the Combustion Air Source from Outdoors section in these instructions or in Section 5.3, Air for Combustion and Ventilation of the National Fuel Gas Code, ANSI Z223.1 (latest edition). This type of installation requires two correctly sized pipes. One pipe brings combustion air from a correctly ventilated attic space or crawl space and the second pipe extends from the furnace vent connection (top right of unit) to the exterior of the building. See Table 5 for intake pipe sizing, allowable length, and elbow usage. Follow all notes, procedures, and required materials in the COMBUSTION AIR/VENT PIPE SIZING section when installing the combustion air pipe from the unit and into a ventilated attic space or crawl space.

Note: Do not terminate vent pipe in an attic or crawl space.

Ventilated Combustion Air Termination

See Figure 29 for required attic termination for the combustion air intake pipe. For attic termination, use two 90° elbows with the open end in a downward position. Make sure to maintain 12 in. (30.5 cm) clearance above any insulation, flooring, or other material.

A crawl space combustion air installation consists of a straight pipe from the PVC coupling on the burner box that extends into the crawl space and terminates with a 1/4 in.(6.4 mm) mesh screen and no elbows.

⚠ WARNING

CARBON MONOXIDE POISONING HAZARD

Failure to follow the steps outlined below for each appliance connected to the venting system being placed into operation could result in carbon-monxide poisoning or death.

The following steps shall be followed for each appliance connected to the venting system being placed into operation, while all other appliances connected to the venting system are not in operation:

1. Inspect the venting system for proper size and horizontal pitch. Determine that there is no blockage, restriction, leakage, corrosion, or other deficiencies which could cause an unsafe condition
2. Close all building doors and windows and all doors.
3. Turn on clothes dryers and TURN ON any exhaust fans, such as range hoods and bathroom exhausts, so they shall operate at maximum speed. Open the fireplace dampers. Do not operate a summer exhaust fan.
4. Follow the lighting instructions. Place the appliance being inspected in operation. Adjust thermostat so the appliance shall operate continuously.
5. Test each appliance (such as a water heater) equipped with a draft hood for spillage (down-draft or no draft) at the draft hood relief opening after 5 min of main burner operation. Appliances that do not have draft hoods need to be checked at the vent pipe as close to the appliance as possible. Use a combustion analyzer to check the CO_2 and CO levels of each appliance. Use a draft gauge to check for a downdraft or inadequate draft condition.
6. After it has been determined that each appliance properly vents when tested as outlined above, return doors, windows, exhaust fans, fireplace dampers, and any other gas burning appliance to their normal condition.
7. If improper venting is observed during any of the above tests, a problem exists with either the venting system or the appliance does not have enough combustion air (Supply Air from outside) to complete combustion. This condition must be corrected before the appliance can function safely.
8. Any corrections to the venting system and/or to the supply (outside) air system must be in accordance with the National Fuel Gas Code Z223.1 or CAN/CGA B149.1 Natural Gas and Propane Installation Code (latest editions). If the vent system must be resized, follow the appropriate tables in Appendix G of the above codes or for this appliance.

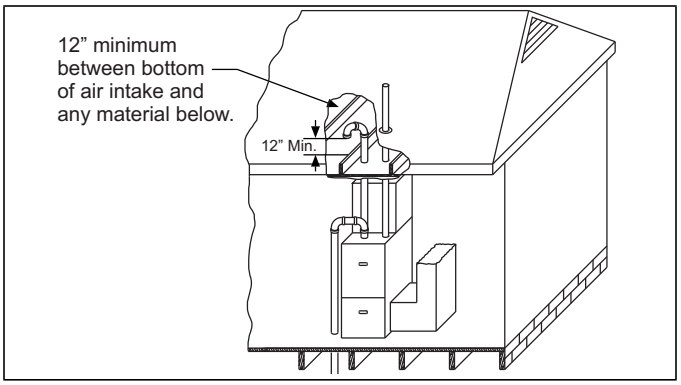

Figure 29: Attic and Crawl Space Combustion Air Termination

Specially Engineered Installations

The above requirements are permitted to be waived where special engineering, approved by the authority having jurisdiction, provides an adequate supply of air for combustion and ventilation.

⚠ WARNING

Be sure to instruct the owner not to block this intake pipe.

SECTION VIII: START-UP AND ADJUSTMENTS

The following start-up checks **MUST** be performed by the furnace installer on every new furnace installation:

1. Gas piping leak check
2. Ignition check
3. Furnace input rate check
4. Air temperature rise check

Instructions on how to perform each of these required installation checks are listed in the sections below.

IMPORTANT: All electrical connections made in the field and in the factory must be checked for proper tightness.

When the gas supply is initially connected to the furnace, the gas piping may be full of air. To purge this air, loosen the ground union until the odor of gas is detected. When gas is detected, immediately retighten the union and check for leaks. Allow 5 min for any gas to dissipate before continuing with the start-up procedure. Make sure that proper ventilation is available to dilute and carry away any vented gas.

GAS PIPING LEAK CHECK

⚠ WARNING

FIRE OR EXPLOSION HAZARD

Failure to follow the safety warnings exactly could result in serious injury, death, or property damage.

Never test for gas leaks with an open flame. Use a commercially available soap solution made specifically for the detection of leaks to check all connections. A fire or explosion may result causing property damage, personal injury, or loss of life.

IMPORTANT: Burner ignition may not be satisfactory on first startup due to residual air in the gas line or until gas manifold pressure is adjusted. The ignition control makes three attempts to light before locking out.

When the gas supply is first connected to the furnace, loosen the ground union until the odor of gas is detected. When gas is detected, immediately tighten the union and check for gas leaks. Allow 5 min for any gas to dissipate before continuing with the startup procedure. Make sure that proper ventilation is available to dilute and carry away any vented gas.

With the furnace in operation, check all of the pipe joints, gas valve connections, and manual valve connections for leakage using an approved gas detector, a non-corrosive leak detection fluid, or other leak detection methods. Take appropriate action to stop any leak. If a leak persists, replace the faulty component.

The furnace and its equipment shutoff valve must be disconnected from the gas supply during any pressure testing of that system at test pressures in excess of 0.5 psig (3.45 kPa).

The furnace must be isolated from the gas supply piping system by closing the equipment shutoff valve during any pressure testing of the gas supply system.

IGNITION CHECK

This furnace lights reliably and without undue ignition noise if the gas-air mixture in the burner is correct. In most cases, it is not necessary to make any adjustments to the factory settings. However, if the burner does not light after several attempts, it may be necessary to adjust the gas flow rate. Before attempting to adjust the gas flow rate, make sure that the other necessary conditions for ignition are met (for example, the gas valve is turned on, the main gas cock is open, and the igniter comes on). If the burner does not light or lights and immediately goes out, increase the gas pressure at the gas valve. If the burner does not light even after the manifold pressure has reached 4.0 in., you may have abnormally low gas heating value and it is necessary to change the main gas orifice to a larger size.

IGNITION SYSTEM SEQUENCE

1. Turn the gas supply ON at external valve and main gas valve.
2. Set the thermostat above room temperature to call for heat.
3. System start-up occurs as follows:
   a. The induced draft blower starts and runs for several seconds to bring fresh combustion air into the combustion chamber. Then the induced draft blower shuts off and the hot surface igniter glows for about 17 s.
   b. After this warm up, the induced draft blower starts again and the ignition module opens the main gas valve.
   c. After flame is established, the supply air blower starts in about 30 s.

⚠ WARNING

HOT SURFACE IGNITION SYSTEM

Do not attempt to light this furnace by hand (with a match or any other means). There may be a potential shock hazard from the components of the hot surface ignition system. The furnace can only be lit automatically by its hot surface ignition system.

CALCULATING THE FURNACE INPUT

NOTICE

DO NOT set manifold pressure less than 3.0 in. W.C. or more than 4.0 in. W.C. for natural gas at sea level. If manifold pressure is outside this range, change main burner orifices.

NOTICE

If orifice hole appears damaged or it is suspected to have been redrilled, check orifice hole with a numbered drill bit of correct size. Never redrill an orifice. A burr-free and squarely aligned orifice hole is essential for proper flame characteristics.

⚠ CAUTION

DO NOT bottom out gas valve regulator adjusting screw. This can result in unregulated manifold pressure and result in excess overfire and heat exchanger failures.

Verify natural gas input rate by clocking meter.

1. Turn off all other gas appliances and pilots.
2. Run furnace for a minimum of 3 min in heating operation.
3. Measure time (in seconds) for gas meter to complete one revolution and note reading. The 2 cubic feet dial provides a more accurate measurement of gas flow.
4. See Table 12 for cubic feet of gas per hour.
5. Multiply cubic feet per hour by heating value (BTU/cu. ft) to obtain input.

If clocked rate does not match the input rate from the unit nameplate. follow the steps in the next section to adjust the manifold pressure. Repeat Steps 2 to 5 until correct input is achieved.

⚠ CAUTION

Be sure to relight any gas appliances that were turned off at the start of this input check.

Table 12: Gas Rate (CU FT/HR) at Full Input

Seconds For One Revolution	Size of Test Dial		
	1 Cu Ft	2 Cu Ft	5 Cu Ft
10	360	720	1800
11	327	655	1636
12	300	600	1500
13	277	555	1385
14	257	514	1286
15	240	480	1200
16	225	450	1125
17	212	424	1059
18	200	400	1000
19	189	379	947
20	180	360	900
21	171	343	857
22	164	327	818
23	157	313	783
24	150	300	750
25	144	288	720
26	138	277	692
27	133	267	667
28	129	257	643
29	124	248	621
30	120	240	600
31	116	232	581
32	113	225	563
33	109	218	545
34	106	212	529
35	103	206	514
36	100	200	500
37	97	195	486
38	95	189	474
39	92	185	462
40	90	180	450
41	88	176	439
42	86	172	429
43	84	167	419
44	82	164	409
45	80	160	400
46	78	157	391
47	76	153	383
48	75	150	375
49	73	147	367
50	72	144	360
51	71	141	355
52	69	138	346
53	68	136	340
54	67	133	333

Seconds For One Revolution	Size of Test Dial		
	1 Cu Ft	2 Cu Ft	5 Cu Ft
55	65	131	327
56	64	129	321
57	63	126	316
58	62	124	310
59	61	122	305
60	60	120	300
62	58	116	290
64	56	112	281
66	54	109	273
68	53	106	265
70	51	103	257
72	50	100	250
74	48	97	243
76	47	95	237
78	46	92	231
80	45	90	225
82	44	88	220
84	43	86	214
86	42	84	209
88	41	82	205
90	40	80	200
92	39	78	196
94	38	76	192
96	38	75	188
98	37	74	184
100	36	72	180
102	35	71	178
104	35	69	173
106	34	68	170
108	33	67	167
110	33	65	164
112	32	64	161
116	31	62	155
120	30	60	150
124	29	58	145
128	28	56	141
133	27	54	135
138	26	52	130
144	25	50	125
150	24	48	120
157	23	46	115
164	22	44	110
171	21	42	105
180	20	40	100

ADJUSTMENT OF MANIFOLD GAS PRESSURE AND INPUT RATE

Inlet and manifold gas pressure can be measured by connecting the U tube manometer to the gas valve with a piece of tubing. Follow the appropriate section in the instructions below. See Figure 30 for the locations of the pressure ports on the gas valve.

Turn gas off at the ball valve or gas cock on gas supply line before the gas valve. Find the pressure ports on the gas valve marked Out P and In P.

1. The manifold pressure must be taken at the port marked OUT P.
2. The gas line pressure must be taken at the port marked IN P.
3. Using a 3/32 in. (2.4 mm) hex head wrench, loosen the set screw by turning it one turn counter clockwise. DO NOT REMOVE THE SET SCREW FROM THE PRESSURE PORT.

Read the inlet gas pressure

Connect the positive side of the manometer to the IN P tap on the gas valve. Do not connect any tubing to the negative side of the manometer, because it references atmospheric pressure. See Figures 30 and 31 for connection details.

1. Turn on gas and electrical supplies and follow the operating instructions to place the unit back in operation.

Table 13: Inlet Gas Pressure Range

INLET GAS PRESSURE RANGE	
	Natural Gas
Minimum*	4.5 in. W.C. (1.12 kPa)
Maximum	10.5 in. W.C. (2.61 kPa)

IMPORTANT: The inlet gas pressure operating range table specifies what the minimum and maximum gas line pressures must be for the furnace to operate correctly. The gas line pressure **MUST BE** a minimum of:

- 7 in. W.C. (1.74 kPA)

This is in order to obtain the BTU input specified on the rating plate and/or the nominal manifold pressure specified in these instructions and on the rating plate.

2. Once the correct gas inlet pressure has been established (see Table 13), turn the gas valve to OFF and turn the electrical supply switch to OFF. Remove the flexible tubing from the gas valve pressure tap and tighten the pressure tap plug using the 3/32 in. (2.4 mm) hex head wrench.
3. Turn on the electrical and gas supplies, and with the burners in operation, check for gas leakage around the gas valve pressure port using an approved non-corrosive gas leak detection fluid or other non-flammable leak detection methods.

Read the manifold gas pressure

Connect the positive side of the manometer to the OUT P tap on the gas valve. Do not connect any tubing to the negative side of the manometer, because it references atmospheric pressure. See Figures 30 and 31 for connection details.

IMPORTANT: The cap for the pressure regulator must be removed entirely to gain access to the adjustment screw. Loosening or tightening the cap does not adjust the flow of gas.

1. See Figure 30 for location of pressure regulator adjustment cap and adjustment screws on main gas valve.
2. Turn on gas and electrical supplies and follow the operating instructions to place the unit back in operation.
3. Adjust manifold pressure by adjusting gas valve regulator screw for the appropriate gas per the following:

Table 14: Nominal Manifold Pressure

NOMINAL MANIFOLD PRESSURE	
Natural Gas	3.5 in. W.C. (0.87 kPa)

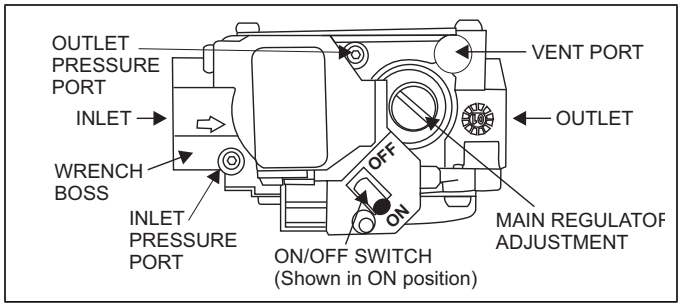

Figure 30: Gas Valve

IMPORTANT: If gas valve regulator is turned in (clockwise), manifold pressure increases. If screw is turned out (counterclockwise), manifold pressure decreases.

4. After the manifold pressure has been adjusted, re-calculate the furnace input to make sure you have not exceeded the specified input on the rating plate. See the CALCULATING THE FURNACE INPUT section.
5. Once the correct BTU (kW) input has been established, turn the gas valve to OFF and turn the electrical supply switch to OFF. Remove the flexible tubing from the gas valve pressure tap and tighten the pressure tap plug using the 3/32 in. (2.4 mm) hex head wrench.
6. Turn on the electrical and gas supplies, and with the burners in operation, check for gas leakage around the gas valve pressure port using an approved non-corrosive gas leak detection fluid or other non-flammable leak detection methods.

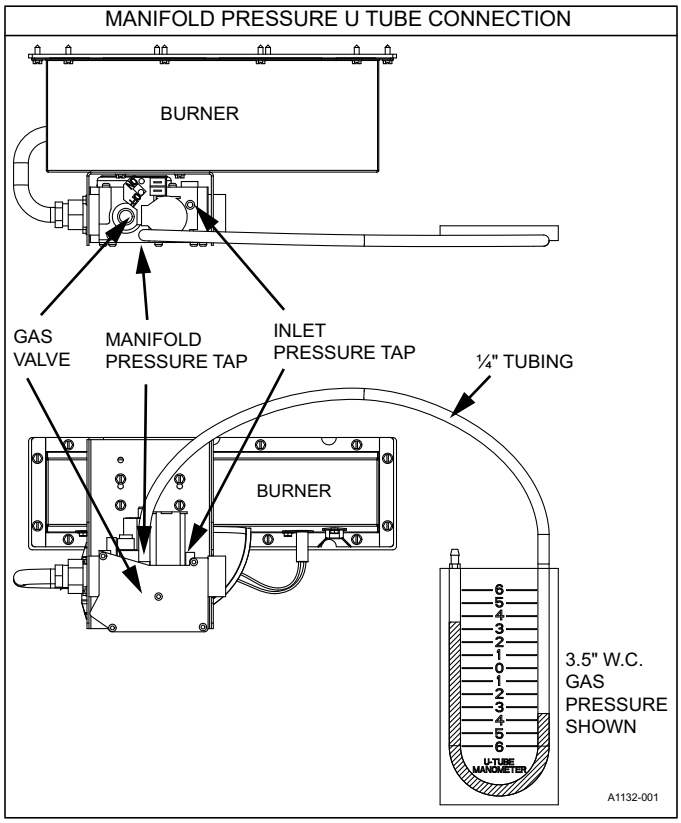

Figure 31: Reading Gas Pressure

ADJUSTMENT OF TEMPERATURE RISE

⚠ DANGER

The temperature rise, or temperature difference between the return air and the supply (heated) air from the furnace, must be within the range shown on the furnace rating plate and within the application limitations shown in Table 4.

The supply air temperature cannot exceed the **"Maximum Supply Air Temperature"** specified in these instructions and on the furnace rating plate. Under NO circumstances can the furnace be allowed to operate above the Maximum Supply Air Temperature. Operating the furnace above the Maximum Supply Air Temperature will cause premature heat exchanger failure, high levels of Carbon Monoxide, a fire hazard, personal injury, property damage, and/or death.

After about 5 min of operation, determine the furnace temperature rise. Take readings of both the return air and the heated air in the ducts about 6 ft (1.83 m) from the furnace, where they are not affected by radiant heat. Increase the blower speed to decrease the temperature rise. Decrease the blower speed to increase the rise.

This furnace has a standard ECM motor. The blower motor speed taps are located on the furnace control board in the blower compartment. See Figure 32 and refer to the unit wiring label to change the blower speed. Place all unused motor leads on the PARK terminals. Two PARK terminals are provided. To use the same speed tap for heating and cooling, the terminals must be jumpered together. This control changes blower speeds based on other 24-V thermostat inputs (Y, W) respectively.

ADJUSTMENT OF FAN CONTROL SETTINGS

This furnace is equipped with a time-on/time-off heating fan control. The fan on delay is fixed at 30 s. The fan off delay has four settings (A = 60 s, B = 90 s, C = 120 s, and D = 180 s). The fan off delay is factory set to 120 s. The fan-off setting must be long enough to adequately cool the furnace, but not so long that cold air is blown into the heated space. The fan-off timing can be adjusted by positioning the jumper on two of the four pins as shown in Figure 32.

The furnace is also equipped with a cooling fan on time delay. The cooling fan on delay has two settings (A = 6 s, B = 24 s). The cooling fan on delay can be adjusted by positioning the COOL jumper as shown in Figure 32.

TAKING A FLUE GAS SAMPLE

If it is necessary to obtain a flue gas sample for analysis, it is permissible to drill a small hole in the plastic flue pipe for a sample probe, provided that the vent piping is PVC and the hole is correctly sealed afterwards. If using a polypropylene vent system, the vent system's manufacturer test port fitting must be used. **DO NOT** drill a test port hole in polypropylene piping. Use the following procedure:

1. Drill an 11/32 in. hole in the side wall of the PVC vent pipe. If the hole is in a horizontal section of the vent pipe, make sure that it is located away from the bottom where condensation may be flowing back toward the furnace.
2. Operate the furnace for a minimum of 10 min to ensure stable operation of the combustion process.
3. Sample the flue gas as necessary to obtain CO readings.
4. Using a 1/8 in. pipe tap, cut threads into the sampling hole of the PVC pipe.
5. Use high temp RTV as a sealant on the threads of a 1/8 in. brass MPT plug and insert it three turns into the hole to correctly seal it.

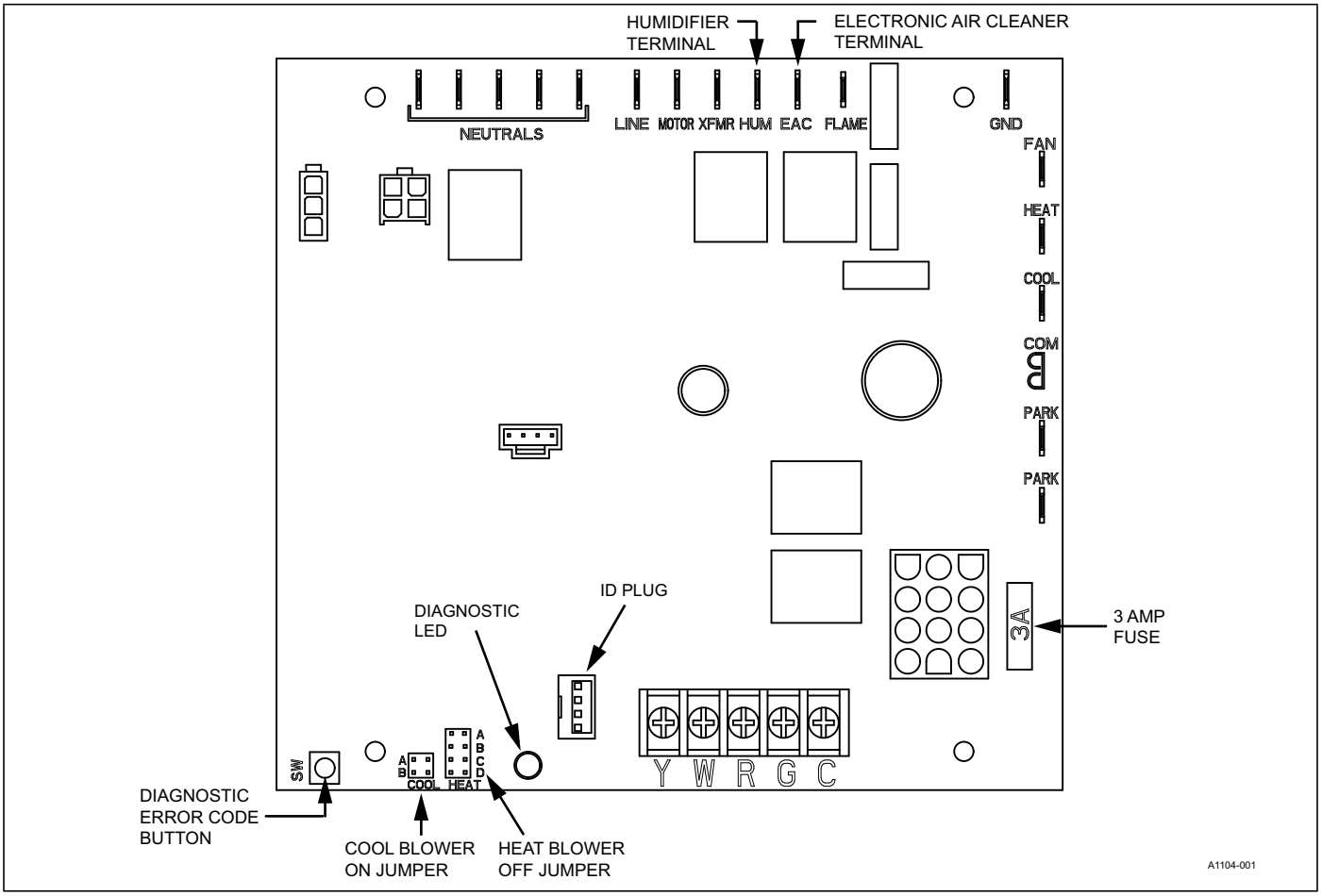

Figure 32: Furnace Control Board

Table 15: Blower Performance CFM - Any Position (Without Filter)

Models	Speed	Airflow Data (SCFM)							
		External Static Pressure (in. H_2O)							
		0.1	0.2	0.3	0.4	0.5	0.6	0.7	0.8
TL9E060B12	High	1319	1287	1265	1232	1204	1171	1134	1098
	Medium High	1128	1100	1073	1039	997	958	919	871
	Medium	952	918	882	846	801	762	717	681
	Medium Low	771	734	694	643	601	559	513	461
	Low	710	675	632	584	540	491	445	397
TL9E080C16	High	1745	1711	1679	1642	1607	1569	1529	1486
	Medium High	1569	1527	1493	1458	1422	1380	1342	1299
	Medium	1355	1324	1285	1247	1209	1177	1133	1083
	Medium Low	1132	1090	1053	1011	977	923	887	825
	Low	968	925	875	832	790	722	650	607
TL9E100C20	High	2171	2123	2092	2038	1995	1944	1893	1853
	Medium High	1815	1766	1721	1676	1632	1583	1535	1499
	Medium	1596	1555	1501	1453	1412	1384	1335	1288
	Medium Low	1377	1316	1276	1223	1170	1131	1076	1029
	Low	1256	1204	1149	1102	1058	1008	953	856

Notes:
Airflow expressed in standard cubic feet per minute (SCFM).
Motor voltage at 115 V.

SECTION IX: SAFETY CONTROLS

CONTROL CIRCUIT FUSE

A 3-A fuse is provided on the control circuit board to protect the 24-V transformer from overload caused by control circuit wiring errors. This is an ATO 3, automotive type fuse and is located on the control board.

BLOWER DOOR SAFETY SWITCH

⚠ CAUTION

Main power to the unit must still be interrupted at the main power disconnect switch before any service or repair work is to be done to the unit. Do not rely upon the interlock switch as a main power disconnect.

Blower and burner must never be operated without the blower panel in place.

This unit is equipped with an electrical interlock switch mounted in the burner compartment. This switch interrupts all power at the unit when the panel covering the blower compartment is removed.

Electrical supply to this unit is dependent upon the panel that covers the blower compartment being in place and correctly positioned.

AUXILIARY LIMIT SWITCH

These controls are mounted on the burner assembly. If the temperature in the area surrounding burner exceeds its setpoint, the gas valve is de-energized. The operation of this control indicates a malfunction in the combustion air blower or heat exchanger or a blocked vent pipe connection. Corrective action is required. These are manual reset controls that must be reset before operation can continue.

PRESSURE SENSOR

This furnace is supplied with a pressure sensor, which monitors the flow through the combustion air/vent piping and condensate drain system.

LIMIT CONTROLS

There is a high temperature limit control located on the furnace vestibule panel near the gas valve. This is an automatic reset control that provides over temperature protection due to reduced airflow. This may be caused by the following:

- A dirty filter
- Indoor fan motor failure
- Too many supply or return registers closed or blocked off

The control module locks out if the limit trips five consecutive times. If this occurs, the control resets and attempts ignition again after 1 h.

SECTION X: NORMAL OPERATION AND DIAGNOSTICS

NORMAL OPERATION SEQUENCE

The following describes the sequence of operation of the furnace. Refer to Owners Manual for component location.

Continuous Blower

Cooling/heating thermostats have a fan switch that has an ON and AUTO position. In the ON position, the thermostat circuit is completed between terminals R and G. The motor operates continuously on the speed tap wire that is connected to the FAN terminal on the furnace control board. To obtain a different circulating fan (continuous blower) speed, change the wire connected to the FAN connection with one of the speed tap wires located on the PARK terminals.

Intermittent Blower - Cooling

Cooling/heating thermostats have a fan switch that has an ON and AUTO position. In the AUTO position, the thermostat circuit is completed between terminals R and G when there is a call for cooling. The motor operates on the speed tap wire that is connected to the COOL cooling terminal on the control board. The fan off setting is fixed at 60 s to improve cooling efficiency.

Heating Cycle

When the thermostat switch is set on HEAT and the fan is set on AUTO, and there is a call for heat, a circuit is completed between terminals R and W of the thermostat. The induced draft blower starts and runs for several seconds to bring fresh combustion air into the combustion chamber. Then the induced draft blower shuts off and the hot surface igniter glows for about 17 s. After this warm up, the induced draft blower starts again and the ignition module opens the main gas valve. The blower motor energizes 30 s after the gas valve opens, if a flame is detected. Normal furnace operation continues until the thermostat circuit between R and W is opened, which causes the ignition system and gas valve to de-energize and the burner flames to be extinguished. The vent motor operates for 15 s and the blower motor operates for the amount of time set by the fan-off delay jumper located on the control board. See Figure 32. The heating cycle is now complete, and ready for the start of the next heating cycle.

If the flame is not detected within 7 s of the gas valve opening, the gas valve is shut off and a retry operation begins. Also, if the flame is lost for 2 s during the 10-s stabilization period, the gas valve is shut off and a retry operation begins. During a retry operation, the vent motor starts a 15-s inter-purge and the ignitor warm-up time is extended to 27 s. If the flame is established for more than 10 s after ignition during a retry, the control clears the ignition attempt (retry) counter. If three retries occur during a call for heat, the furnace shuts down for 1 h. If at the end of the 1-h shut down there is a call for heat, the furnace initiates a normal start cycle. If the problem has not been corrected, the furnace locks out after three retries.

A momentary loss of gas supply, a flame blowout, or a faulty flame probe circuit results in a disruption in the flame and is sensed within 1.0 s. The gas valve de-energizes and the control begins a recycle operation. A normal ignition sequence begins after a 15-s inter-purge. If during the five recycles, the gas supply does not return, or the fault condition is not corrected, the ignition control locks out for 60 min.

During burner operation, a momentary loss of power for 50 milliseconds or longer de-energizes the gas valve. When the power is restored, the gas valve remains de-energized and the ignition sequence immediately restarts.

TROUBLESHOOTING

Make the following visual checks before troubleshooting:

1. Check that the power to the furnace and the ignition control module is ON.
2. Check that the manual shut-off valves in the gas line to the furnace are open.
3. Make sure all wiring connections are secure.
4. Review the sequence of operation. Start the system by setting the thermostat above the room temperature. Observe the system's response, then use the NORMAL OPERATION SEQUENCE section to check the system's operation.

⚠ WARNING

Never bypass any safety control to allow furnace operation. To do so will allow furnace to operate under potentially hazardous conditions.

Do not try to repair controls. Replace defective controls with OEM Source 1 Parts.

Never adjust pressure switch to allow furnace operation.

FURNACE CONTROL DIAGNOSTICS

The furnace has built-in, self-diagnostic capability. A blinking LED light on the control board can flash red, green, or amber to indicate various conditions. The control continuously monitors its own operation and the operation of the system. If a fault occurs, the LED light indicates the fault code.

The flash codes listed below have the following timing: the LED light turns on for 1/4 s and turns off for 1/4 s. This pattern is repeated the number of times equal to the code. There is a 1.5-s pause between codes. For example, the 6 Red Flashes code means the LED light flashes on and off six times and then remains off for 1.5 s. This pattern repeats as long as the fault condition remains.

Steady on Green: Indicates normal operation with no thermostat calls.

1 Green Flash: Indicates normal operation with a thermostat call for heat.

2 Green Flashes: Indicates normal operation with a thermostat call for cooling.

3 Green Flashes: Indicates normal operation with a thermostat call for continuous fan.

LED Steady Off: If the LED light does not flash at all, check for power to the control board. If the control board is correctly powered, the control board may need to be replaced.

Steady on Red: Indicates a control failure. Turn off the power to the furnace and turn on the power to the furnace again. If the fault code returns, the control board must be replaced. The control board is not field-repairable.

1 Red Flash: Indicates system lockout due to too many retries.

2 Red Flashes: Indicates a pressure switch null error. The pressure sensor is sensing pressure when there should not be any pressure. Check for a faulty pressure sensor or miswiring.

3 Red Flashes: Indicates a pressure switch span error. The pressure sensor is not sensing the correct pressure. Check for the following:

- Faulty inducer
- Blocked vent pipe
- Broken pressure sensor hose
- Disconnected pressure sensor or inducer wires
- Faulty pressure sensor

4 Red Flashes: Indicates the high limit switch is open. The main limit switch has opened its normally closed contacts. The control operates the supply air blower and inducer while the open limit condition exists. Check for the following:

- Dirty filter
- Incorrectly sized duct system
- Incorrect blower speed setting
- Incorrect firing rate
- Loose limit switch wiring
- Faulty blower motor

If the main limit switch opens five times within a single call for heat, the control indicates 4 Red Flashes and enters a 1-h soft lockout.

5 Red Flashes: Indicates flame is present with the gas valve off. The control board has sensed a flame during a period when the gas valve is not supposed to be open. Check for miswiring. The control enters a hard lockout. After the problem is corrected, you must turn off the power and turn on the power again to reset the control.

6 Red Flashes: Indicates the auxiliary limit switch is open. The limit switch mounted on the burner box is open, indicating an overheating condition in the burner. Check for a blocked vent or an overfired condition.

7 Red Flashes: Indicates a gas valve short circuit. The control board has sensed that the gas valve circuit is shorted. Check for miswiring of the gas valve or a shorted gas valve wire.

1 Amber Flash: Indicates low flame current. The flame current being sensed by the flame sensor has dropped below the normal level. The furnace continues to operate in this condition, but if the flame current continues to drop, the burners shut down. Check for a dirty flame sensor.

2 Amber Flashes: Indicates ID plug failure. The furnace is equipped with an ID plug on the control board that is used to transmit model-specific information to the board. If this error occurs, it means that the control is unable to detect the ID plug. The furnace does not operate correctly without the correct ID plug installed.

3 Amber Flashes: Indicates the control fuse is open. The low-voltage fuse on the control board has opened or is missing.

Rapid Red Flashes: Indicates incorrect line voltage polarity. The polarity of the incoming power to the furnace is reversed.

Soft Lockout: The control includes a soft lockout that resets automatically after 1 h. This provides protection to an unoccupied structure if a temporary condition causes a furnace malfunction, for example, if a temporary interruption in gas supply prevents the furnace from lighting. The control keeps trying to light each hour and resumes normal operation if the gas supply is restored.

Hard Lockout: Some fault conditions result in a hard lockout, and you must turn off the power to the control and turn on the power to the control again to reset the control. The control does not automatically restart.

IGNITION CONTROL FLAME SENSE LEVELS
Normal flame sense current range: 3–10 microamps
Low flame signal warning starts at 3.0 microamps
Low flame sense lockout point: 1.0 microamps

DIAGNOSTIC FAULT CODE STORAGE AND RETRIEVAL

The control in the furnace is equipped with memory that stores up to five error codes to allow a service technician to diagnose problems more easily. This memory is retained even if power to the furnace is lost.

Note: This feature must only be used by a qualified service technician.

If more than five error codes have occurred since the last reset, only the five most recent are retained. The furnace control board has an **SW** button that is used to retrieve error codes. This function only works if there are no active thermostat signals, so any call for heating, cooling, or continuous fan must be terminated before attempting to retrieve error codes.

To retrieve the error codes, press the **SW** button. The LED on the control flashes the error codes that are in memory, starting with the most recent. There is a 2-s pause between each flash code. After the error codes have all been displayed, the LED resumes the normal slow green flash after a 5-s pause. To repeat the series of error codes, press the **SW** button again.

If there are no error codes in memory, the LED flashes two green flashes. To clear the memory, press and hold the **SW** button for more than 5 s. The LED flashes three green flashes when the memory has been cleared, then resumes the normal slow green flash after a 5-s pause.

SECTION XI: REPLACEMENT PARTS LIST

DESCRIPTION
MOTOR
BLOWER, COMBUSTION
MOTOR, DIRECT DRIVE BLOWER
ELECTRICAL
CONTROL, FURNACE
CONTROL, TEMPERATURE
IGNITER
SENSOR, FLAME
SWITCH, DOOR
SWITCH, LIMIT
SENSOR, PRESSURE
TRANSFORMER
VALVE, GAS
AIR MOVING
HOUSING, BLOWER
WHEEL, BLOWER
FABRICATED PARTS
BRACKET, BLOWER TRACK (2 required)
BURNER, MAIN GAS
HEAT EXCHANGER ASSEMBLY
PANEL, BLOCKOFF
PAN, BOTTOM
PANEL, DOOR (2 required)

DESCRIPTION
FABRICATED PARTS Continued
PANEL, TOP
RAIL, BLOWER (2 required)
SHELF, BLOWER
MISCELLANEOUS
BAG, PARTS
BRACKET, DOOR
DIAGRAM, WIRING
FERRULE (3 required)
GASKET, FOAM (Door) (1.5 ft required)
GROMMET (3 required)
HARNESS, WIRING
HOSE, CONDENSATE
HOSE, RAIN GUTTER
KNOB, QUARTER TURN (4 required)
MOTOR MOUNT
ORIFICE, BURNER
PAN, CONDENSATE
PLUG, SEAL, 7/8 in.
PLUG, SEAL, 2-3/8 in.
PLUG, VENT PIPE
SIGHT GLASS, OVAL (2 required)
TUBING, SILICON

REPLACEMENT PART CONTACT INFORMATION

This is a generic parts list. To request a complete parts list, see the contact information below.

Visit our website at www.source1parts.com to do the following:

- Search for a part or browse the catalog.
- Find a dealer or distributor.
- Access customer service contact information as follows.
    a. Click the **Brand Links** button.
    b. Click the **Customer Service** button.

You can contact us by mail. Just send a written request to the following address:

Johnson Controls Ducted Systems
Consumer Relations
5005 York Drive
Norman, OK 73069

SECTION XII: WIRING DIAGRAM

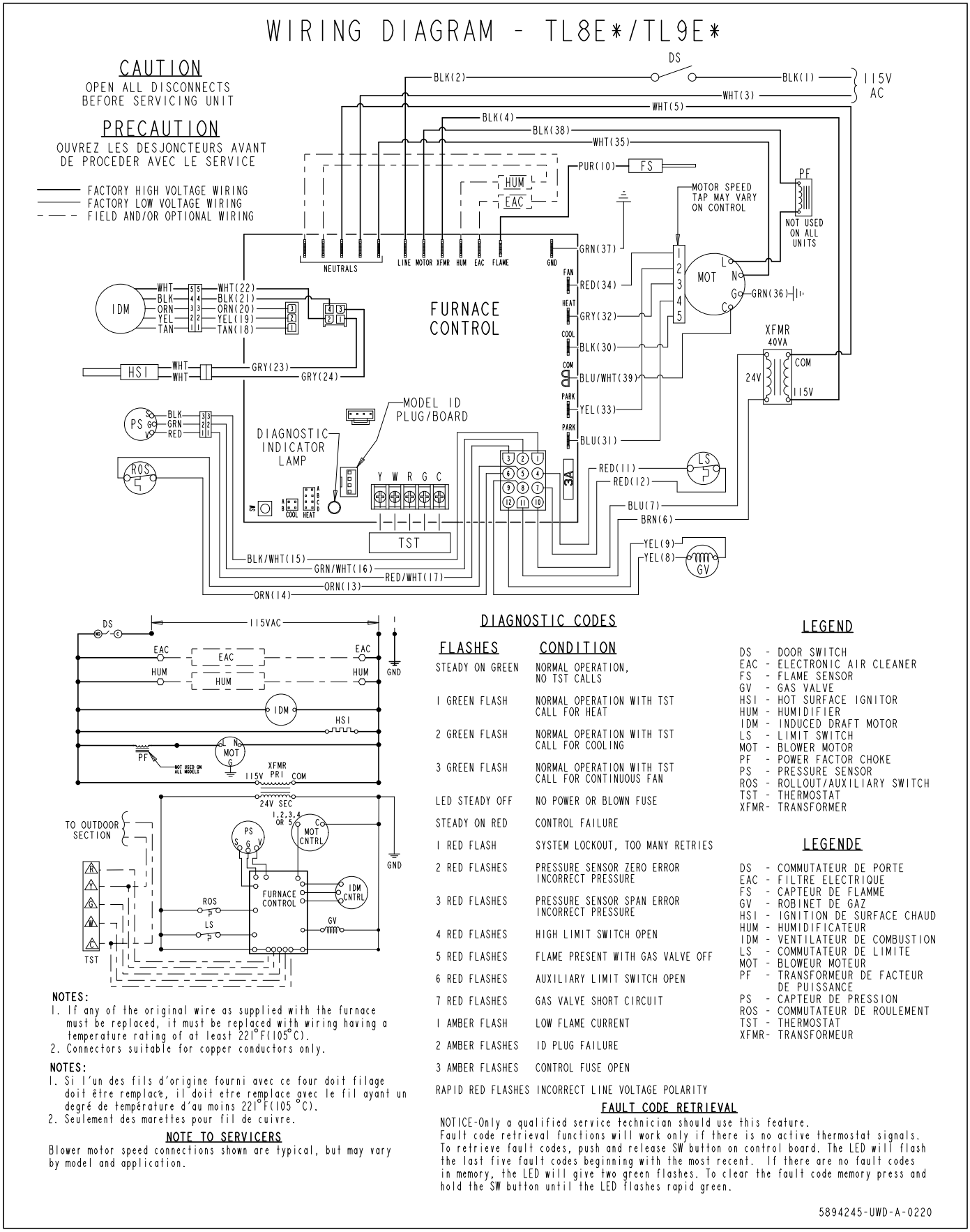

NOTES:

1. If any of the original wire as supplied with the furnace must be replaced, it must be replaced with wiring having a temperature rating of at least 221°F(105°C).
2. Connectors suitable for copper conductors only.

NOTES:

1. Si l'un des fils d'origine fourni avec ce four doit filage doit être remplace, il doit etre remplace avec le fil ayant un degré de température d'au moins 221°F(105 °C).
2. Seulement des marettes pour fil de cuivre.

NOTE TO SERVICERS

Blower motor speed connections shown are typical, but may vary by model and application.

DIAGNOSTIC CODES

FLASHES	CONDITION
STEADY ON GREEN	NORMAL OPERATION, NO TST CALLS
1 GREEN FLASH	NORMAL OPERATION WITH TST CALL FOR HEAT
2 GREEN FLASH	NORMAL OPERATION WITH TST CALL FOR COOLING
3 GREEN FLASH	NORMAL OPERATION WITH TST CALL FOR CONTINUOUS FAN
LED STEADY OFF	NO POWER OR BLOWN FUSE
STEADY ON RED	CONTROL FAILURE
1 RED FLASH	SYSTEM LOCKOUT, TOO MANY RETRIES
2 RED FLASHES	PRESSURE SENSOR ZERO ERROR INCORRECT PRESSURE
3 RED FLASHES	PRESSURE SENSOR SPAN ERROR INCORRECT PRESSURE
4 RED FLASHES	HIGH LIMIT SWITCH OPEN
5 RED FLASHES	FLAME PRESENT WITH GAS VALVE OFF
6 RED FLASHES	AUXILIARY LIMIT SWITCH OPEN
7 RED FLASHES	GAS VALVE SHORT CIRCUIT
1 AMBER FLASH	LOW FLAME CURRENT
2 AMBER FLASHES	ID PLUG FAILURE
3 AMBER FLASHES	CONTROL FUSE OPEN
RAPID RED FLASHES	INCORRECT LINE VOLTAGE POLARITY

LEGEND

DS - DOOR SWITCH
EAC - ELECTRONIC AIR CLEANER
FS - FLAME SENSOR
GV - GAS VALVE
HSI - HOT SURFACE IGNITOR
HUM - HUMIDIFIER
IDM - INDUCED DRAFT MOTOR
LS - LIMIT SWITCH
MOT - BLOWER MOTOR
PF - POWER FACTOR CHOKE
PS - PRESSURE SENSOR
ROS - ROLLOUT/AUXILIARY SWITCH
TST - THERMOSTAT
XFMR- TRANSFORMER

LEGENDE

DS - COMMUTATEUR DE PORTE
EAC - FILTRE ELECTRIQUE
FS - CAPTEUR DE FLAMME
GV - ROBINET DE GAZ
HSI - IGNITION DE SURFACE CHAUD
HUM - HUMIDIFICATEUR
IDM - VENTILATEUR DE COMBUSTION
LS - COMMUTATEUR DE LIMITE
MOT - BLOWEUR MOTEUR
PF - TRANSFORMEUR DE FACTEUR DE PUISSANCE
PS - CAPTEUR DE PRESSION
ROS - COMMUTATEUR DE ROULEMENT
TST - THERMOSTAT
XFMR- TRANSFORMEUR

FAULT CODE RETRIEVAL

NOTICE-Only a qualified service technician should use this feature. Fault code retrieval functions will work only if there is no active thermostat signals. To retrieve fault codes, push and release SW button on control board. The LED will flash the last five fault codes beginning with the most recent. If there are no fault codes in memory, the LED will give two green flashes. To clear the fault code memory press and hold the SW button until the LED flashes rapid green.

5894245-UWD-A-0220

Figure 33: Wiring Diagram

SECTION XIII: START-UP SHEET

33" 95% AFUE ECM Single Stage Ultra-Low NOx Gas Furnace Start Up Sheet

Proper furnace start up is critical to customer comfort and equipment longevity

Start-Up Date

Technician Performing Start-Up

Installing Contractor Name

Owner Information

Name

Address

City

State or Province

Zip or Postal Code

Equipment Data

Furnace Model

Furnace Serial

Indoor Coil Model

Indoor Coil Serial

Outdoor Unit Model

Outdoor Unit Serial

Furnace Configuration

◯ Upflow ◯ Horizontal Left ◯ Horizontal Right

Filter, Thermostat, Accessories

Filter Type

Filter Size

Filter Location(s)

Thermostat Type

Other System Equipment and Accessories

Connections -- All Per Installation Instructions and Local Code

☐ Unit is level ☐ Gas piping is connected (including drip leg) ☐ Supply plenum and return air are connected

☐ Vent system is connected

Condensate Management

☐ Condensate tubing is correctly installed for the furnace position

☐ Condensate trap is installed ☐ Condensate drain is connected

Venting

Intake Size # of 90 Degree Ells # 0f 45 Degree Ells Length

Exhaust Size # of 90 Degree Ells # 0f 45 Degree Ells Length

☐ Venting system is the proper size, within the limitations of the chart in the installation instructions, properly connected to the furnace, and properly pitched

Electrical: Line Voltage

☐ Polarity is correct (black is L1 (hot), white is N (neutral) ☐ Ground wire is connected

Line voltage value to furnace (volts AC)

Electrical: Low Voltage

☐ Thermostat wiring is complete ☐ Thermostat heat anticipator set to .40 (if present)

Low voltage value between "R" and "C" on furnace control board (volts AC)

Continued on next Page

Gas Side

Inlet Gas Pressure (in. w.c.") ☐ Manifold Gas Pressure (in. w.c.") ☐ CO_2 in Vent ☐

Calculated input in btuh - clock the gas meter (Nat Gas Only) ☐ CO in Vent ☐

Air Side: System External Static Pressure

Supply static before indoor coil (in w.c.") ☐ Supply static after indoor coil (in w.c.") ☐

Return Static (in w.c.") before filter ☐ Return Static (in w.c.") after filter (furnace side) ☐

Total External Static Pressure ☐

Air Side: Heating

Heat Blower Speed Selected ◯ 5-Red (Low) ◯ 4-Yel (Med Lo) ◯ 3-Gray (Med) ◯ 2-Blue (Med High) ◯ 1-Black (High)

Temperature rise in degrees F ☐

Air Side: Cooling

Cool Blower Speed Selected ◯ 5-Red (Low) ◯ 4-Yel (Med Lo) ◯ 3-Gray (Med) ◯ 2-Blue (Med High) ◯ 1-Black (High)

Cooling CFM delivery (use Blower Performance Data Chart) ☐

Air Side: Continuous Fan

Blower Speed Selected ◯ 5-Red (Low) ◯ 4-Yel (Med Lo) ◯ 3-Gray (Med) ◯ 2-Blue (Med High) ◯ 1-Black (High)

Cycle Test

- ☐ Operate the furnace through several heating cycles from the thermostat, noting and correcting any problems
- ☐ Operate the furnace through continuous fan cycles from the thermostat, noting and correcting any problems
- ☐ Operate the furnace through cooling cycles (as applicable), noting and correcting any problems

Clean Up

- ☐ Installation debris disposed of and furnace area cleaned up?

Owner Education

- ☐ Give owner the owner's manual provided
- ☐ Explain operation of system to equipment owner
- ☐ Explain the importance of regular filter replacement and equipment maintenance
- ☐ Explain thermostat use and programming (if applicable) to owner

Additional Job Detail

Subject to change without notice. Published in U.S.A.
Copyright © 2020 by Johnson Controls. All rights reserved.

5894307-UIM-B-0920
Supersedes: 5894307-UIM-A-0320

York International Corp.
5005 York Drive
Norman, OK 73069