INSTALLATION MANUAL

R-410A
ZR SERIES W/SMART EQUIPMENT™

6-1/2 - 12-1/2 Ton

60 Hertz

Table of contents

General . . . 2
Installation . . . 5
Preceding installation . . . 5
Limitations . . . 6
Unit components . . . 7
Location . . . 8
Clearances . . . 8
Rigging and handling . . . 8
Ductwork . . . 15
Side panels . . . 15
Condensate drain . . . 16
Compressors . . . 16
Filters . . . 16
Power and control wiring . . . 17
Optional electric heat . . . 30
Optional gas heat . . . 30
Options and accessories . . . 32
Economizer sequences . . . 33
Dry bulb changeover . . . 33
Single enthalpy changeover . . . 33
Dual enthalpy changeover . . . 33
Auto . . . 33
Free cooling operation . . . 33
Power exhaust . . . 34
Smart Equipment™ economizer board . . . 35
Airflow performance . . . 42
Air balance . . . 46
Checking air quantity . . . 46
Operation . . . 50
Cooling sequence of operation . . . 50
Cooling operation errors . . . 51
Reheat mode sequence of operation . . . 52
Electric heating sequence of operations . . . 53
Electric heat operation errors . . . 54
Gas heating sequence of operations . . . 54
Gas heating operation errors . . . 55
Cooling start-up . . . 56
Gas heat start-up . . . 57
Checking gas heat input . . . 57
Charging the unit . . . 59
Navigation components for the Smart Equipment™ control board . . . 59
Smart Equipment™ unit control board . . . 60
Start-up sheet . . . 67

List of tables

1 Component location table . . . 7
2 ZR078-150 unit limitations . . . 8
3 Weights and dimensions . . . 9
4 ZR078-150 unit accessory weights . . . 10
5 ZR078-150 unit physical dimensions . . . 11
6 ZR078-150 unit clearances . . . 11
7 Side duct dimensions . . . 13
8 Left/end duct dimensions . . . 13
9 Roof curb components . . . 14
10 Control wire sizes . . . 19
11 Electrical data . . . 20
12 ZR078-150 physical data . . . 28
13 Electric heat minimum supply air . . . 30
14 Gas application data . . . 30
15 Gas pipe sizing - capacity of pipe . . . 31
16 Gas heat minimum supply air . . . 31
17 Supply air limitations . . . 39
18 Altitude/temperature correction factors . . . 40
19 Airflow performance - side duct application . . . 42
20 Airflow performance - bottom duct application . . . 44
21 RPM selection . . . 45
22 Indoor blower specifications . . . 46
23 Power exhaust specifications . . . 46
24 Motor sheave datum diameters . . . 48
25 Additional static resistance . . . 49
26 Dehumidification sequence in normal and alternate mode . . . 53
27 Electric heat limit setting 50 in. cabinet . . . 54
28 Electric heat limit setting 42 in. cabinet . . . 54
29 Electric heat anticipator setpoints . . . 54
30 Gas heat limit control settings . . . 56
31 Gas heat anticipator setpoints . . . 56
32 Gas rate cubic feet per hour . . . 58
33 Gas heat stages . . . 58
34 Cable for FC buses and SA buses in order of preference . . . 66
35 Ignition control flash codes . . . 66

List of figures

1 Unit shipping bracket . . . 5
2 Condenser covering . . . 5
3 Compressor section . . . 5
4 Component location . . . 7
5 Unit 4 point load weight . . . 9
6 Unit 6 point load weight . . . 9
7 Center of gravity . . . 9
8 ZR078-120 physical dimensions . . . 10
9 ZR150 physical dimensions . . . 10
10 ZR078-150 unit bottom duct openings . . . 11
11 ZR078-150 unit electrical entry . . . 12
12 ZR078-120 unit side duct openings . . . 12
13 ZR150 unit side duct openings . . . 13
14 ZR078-150 unit/end left duct opening . . . 13
15 ZR078-150 roof curb . . . 14
16 ZR078-150 transition roof curb . . . 14
17 Side panels with hole plugs . . . 15
18 Return down flow plenum with panel . . . 15
19 Discharge panel in place . . . 15
20 Save side panels for economizer hood tops . . . 16
21 Condensate drain . . . 16
22 Typical field wiring disconnect - cooling unit with or without electric heat . . . 18
23 Typical field wiring disconnect - cooling unit with gas heat . . . 18
24 Typical low voltage field wiring . . . 19
25 Side entry gas piping . . . 30
26 Bottom entry gas piping . . . 31
27 SE-ECO1001-0 economizer controller . . . 35
28 Belt adjustment . . . 39
29 Altitude/temperature correction factors . . . 40
30 Dry coil delta P . . . 47
31 Cooling operation piping schematic - circuit #1 shown . . . 52
32 Reheat operation piping schematic - circuit #1 shown . . . 53
33 Typical flame . . . 59
34 Typical gas valve . . . 59
35 Unit control board . . . 60

General

ZR078-150 units are single package air conditioners with optional gas heating designed for outdoor installation on a rooftop or slab and for non-residential use. The units can be equipped with factory or field-installed electric heaters for heating applications.

The units are completely assembled on rigid, permanently attached base rails. All piping, refrigerant charge, and electrical wiring is factory installed and tested. The units require electric power, gas supply (where applicable), and duct connections. The electric heaters have nickel-chrome elements and use single-point power connection.

Safety considerations

⚠ This is a safety alert symbol. When you see this symbol on labels or in manuals, be alert to the potential for personal injury.

This is a safety alert symbol. When you see this symbol on labels or in manuals, be alert to the potential for personal injury.

Understand and pay particular attention the signal words **DANGER**, **WARNING** or **CAUTION**.

DANGER indicates an **imminently** hazardous situation, which, if not avoided, **will result in death or serious injury.**

WARNING indicates a **potentially** hazardous situation, which, if not avoided, **could result in death or serious injury.**

CAUTION indicates a potentially hazardous situation, which, if not avoided **may result in minor or moderate injury.** It is also used to alert against unsafe practices and hazards involving only property damage.

⚠WARNING

Improper installation may create a condition where the operation of the product could cause personal injury or property damage. Improper installation, adjustment, alteration, service or maintenance can cause injury or property damage. Refer to this manual for assistance or for additional information, consult a qualified contractor, installer or service agency.

⚠ CAUTION

This product must be installed in strict compliance with the installation instructions and any applicable local, state and national codes including, but not limited to building, electrical, and mechanical codes.

⚠WARNING

Before you perform service or maintenance operations on the unit, turn off the main power switch to unit. Electrical shock could cause personal injury. Improper installation, adjustment, alteration, service or maintenance can cause injury or property damage. Refer to this manual. For assistance or additional information consult a qualified installer, service agency, or the gas supplier.

⚠ CAUTION

This system uses R-410A Refrigerant which operates at higher pressures than R-22. No other refrigerant may be used in this system. Gage sets, hoses, refrigerant containers and recovery systems must be designed to handle R-410A. If you are unsure, consult the equipment manufacturer. Failure to use R-410A compatible servicing equipment may result in property damage or injury.

⚠WARNING

If the information in this manual is not followed exactly, a fire or explosion may result causing property damage, personal injury or loss of life.

Do not store or use gasoline or other flammable vapors and liquids in the vicinity of this or any other appliance.

What to do if you smell gas

- Do not try to light any appliance.
- Do not touch any electrical switch.
- Do not use any phone in your building.
- Immediately call your gas supplier from a neighbor's phone. Follow the gas supplier's instructions.
- If you cannot reach your gas supplier, call the fire department.

Installation and service must be performed by a qualified installer, service agency, or the gas supplier.

Due to system pressure, moving parts, and electrical components, the installation and servicing of air conditioning equipment can be hazardous. Only qualified, trained service personnel must install, repair, or service this equipment. Untrained personnel can perform basic maintenance functions of cleaning coils and filters, and replacing filters.

Observe all the precautions in the literature, labels, and tags that accompany the equipment whenever you work on air conditioning equipment. Be sure to follow all other applicable safety precautions and codes including ANSI Z223.1 or CSA-B149.1- latest edition.

Wear safety glasses and work gloves. Use quenching cloth and have a fire extinguisher available during brazing operations.

Inspection

As soon as you receive a unit, you must inspect it for possible damage during transit. If damage is evident, note the extent of the damage on the carrier's freight bill. You must make a separate request for inspection by the carrier's agent in writing.

⚠ CAUTION

This product must be installed in strict compliance with the enclosed installation instructions and any applicable local, state and national codes including, but not limited to, building, electrical, and mechanical codes.

The furnace and its individual shut-off valve must be disconnected from the gas supply piping system during any pressure testing at pressures in excess of 1/2 PSIG.

Pressures greater than 1/2 PSIG will cause gas valve damage resulting in a hazardous condition. If it is subjected to a pressure greater than 1/2 PSIG, the gas valve must be replaced.

The furnace must be isolated from the gas supply piping system by closing its individual manual shut-off valve during any pressure testing of the gas supply piping system at test pressures equal to or less than 1/2 PSIG

Reference

Additional information is available in the following reference forms:

- Technical Guide - ZF/ZJ/ZR 037-150
- General Installation - ZR078-150
- Smart Equipment™ Control Quick Start Guide
- Economizer Accessory -
  Downflow Factory Installed
  Downflow Field Installed
  Horizontal Field Installed
- Motorized Outdoor Air Damper
- Manual Outdoor Air Damper (0-100%)
- Manual Outdoor Air Damper (0-35%)
- Gas Heat Propane Conversion Kit
- Gas Heat High Altitude Kit (Natural Gas)
- Gas Heat High Altitude Kit (Propane)
- –60°F Gas Heat Kit
- Electric Heater Accessory 50 in. cabinet
- Electric Heater Accessory 42 in. cabinet

Renewal parts

Contact your local Ducted Systems parts distribution center for authorized replacement parts.

Approvals

The design is certified by CSA as follows:

- For use as a cooling only unit, cooling unit with supplemental electric heat or a forced air furnace.
- For outdoor installation only.
- For installation on combustible material and may be installed directly on combustible flooring or, in the U.S., on wood flooring or Class A, Class B or Class C roof covering materials.
- For use with natural gas. The unit can be converted to LP with a kit.

⚠ CAUTION

This product must be installed in strict compliance with the enclosed installation instructions and any applicable local, state, and national codes including, but not limited to, building, electrical, and mechanical codes.

⚠ WARNING

Improper installation may create a condition where the operation of the product could cause personal injury or property damage.

⚠ CAUTION

This system uses R-410A Refrigerant which operates at higher pressures than R-22. No other refrigerant may be used in this system.

Nomenclature

6.5-12.5 Ton ZR Model Number Nomenclature

Z	R	090	C	00	A	2	A	1	A	A	A	1	A	1

Product Category
- Z = A/C, Single Pkg., R-410A

Product Identifier
- R = Pkg AC Reheat

Nominal Cooling Capacity
- 078 = 6.5 Ton
- 090 = 7.5 Ton
- 102 = 8.5 Ton
- 120 = 10.0 Ton
- 150 = 12.5 Ton

Heat Type
- C = Cooling Only
- E = Electric Heat

Two Stage Natural Gas Heat Options
- N = 2 Stage Gas Aluminized Steel
- S = 2 Stage Gas Stainless Steel

Heat Capacity
- 00 = Cooling Only

Gas MBH Input (Unit Size Allowed)
- 12 = 120 MBH Input (078, 090, 102)
- 18 = 180 MBH Input (078,090,102,120,150)
- 24 = 240 MBH Input (120,150)

Electric Heat (Unit Size Allowed)
- 09 = 9 KW (078,090,102)
- 18 = 18 KW (078,090,102,120,150)
- 24 = 24 KW (061, 078,090,102,120,150)
- 36 = 36 KW (078,090,102,120,150)
- 54 = 54 KW (120,150)

Blower Option
- B = Standard Static
- D = High Static
- E = VFD/VAV Std Static
- G = VFD/VAV High Static
- H = VFD/VAV w/Bypass Std Static
- K = VFD/VAV w/Bypass High Static
- L = VFD/VAV Customer Std Static
- N = VFD/VAV Customer High Static
- P = VFD IntelliSpeed Std Static
- R = VFD IntelliSpeed High Static
- S = VFD w/Byp IntelliSp Std Static
- U = VFD w/Byp IntelliSp Hi Static
- V = VFD Cust IntelliSp Std Static
- X = VFD Cust IntelliSp Hi Static

Voltage
- 2 = 208/230-3-60
- 4 = 460-3-60
- 5 = 575-3-60

Outdoor Air Option
- A = No Economizer
- B = Economizer w/Barometric RLF
- D = Economizer w/Power EXH
- H = Motorized Damper

Service Options
- 1 = No Service Options
- 2 = DSC (Disconnect Switch)
- 3 = NCO (Non-PWR Conv. Outlet)
- 4 = PCO (Powered Conv. Outlet)
- 5 = DSC,NCO
- 6 = DSC,PCO

Sensors
- A = No Sensors
- B = PHM (Phase Monitor)
- C = DFS (Dirty Filter Switch)
- D = SSD (Supply Air Smoke DET)
- E = RSD (Return Air Smoke DET)
- F = PHM,DFS
- G = PHM,SSD
- H = PHM,RSD
- J = DFS,SSD
- K = DFS,RSD
- L = SSD,RSD
- M = PHM,DFS,SSD
- N = PHM,DFS,RSD
- P = PHM,SSD,RSD
- Q = DFS,SSD,RSD
- R = PHM,DFS,SSD,RSD

Controls Option
- A = Stand Alone Smart Equipment™
- C = BACnet MSTP,Mdbs,N2 COM Card
- D = CPC Control, DFS, APS
- F = Fault Detection Diagnostics
- G = Novar UCM Ctrl, DFS, APS
- H = Hnywll Excel 10 CTRL,DFS,APS
- M = VERASYS SINGLE ZONE
- N = VERASYS CHANGE OVER BYPASS
- P = VERASYS VAV
- Q = VERASYS SINGLE ZONE W/FDD
- R = VERASYS COBP W/FDD
- T = VERASYS VAV W/FDD

Refrigeration
- A = Standard Refrigeration
- B = ECC (E-Coat Cond Coil)
- C = EEC (E-Coat Evap Coil)
- F = ECC,EEC

Additional Options
- 1 = STD Throwaway Filter
- 2 = 2" Pleated Filters (Merv 8)
- 3 = 4" Pleated Filters (Merv 13)
- 4 = Coil Guard (CG), STD Filter
- 5 = 2" Pleated Filter,CG
- 6 = 4" Pleated Filter,CG

Cabinet Options
- A = Std Cabinet
- E = SSD (SST Drain Pan)
- R = Reverse Drain Pan

Product Generation
- 1 = First Generation

Installation

Installation safety information

Read the following instructions before you install this appliance. This is an outdoor combination heating and cooling unit. The installer must assure that these instructions are made available to the consumer. The installer must instruct the consumer to retain the instructions for future reference.

- Refer to the unit rating plate for the approved type of gas for this product.
- Install this unit only in a location and position as specified on Page 8 of these instructions.
- Never test for gas leaks with an open flame. Use commercially available soap solution made specifically for the detection of leaks when you check all connections. See Pages 5, 32, 32 and 57 of these instructions.
- Always install the furnace to operate within the furnace's intended temperature-rise range with the duct system and within the allowable external static pressure range. This information is specified on the unit name/rating plate and specified on Page 58 of these instructions.
- This equipment is not to be used for the temporary heating of buildings or structures under construction.

⚠WARNING

FIRE OR EXPLOSION HAZARD

Failure to follow the safety warning exactly could result in serious injury, death, or property damage.

Never test for gas leaks with an open flame. Use a commercially available soap solution made specifically for the detection of leaks to check all connections. A fire or explosion may result causing property damage, personal injury, or loss of life.

Preceding installation

1. Remove the two screws that hold the brackets in the front, rear, and compressor side fork-lift slots. See Figure 1

Item	Description
A	Bracket screws
B	Bracket

Figure 1: Unit shipping bracket

2. Turn each bracket toward the ground. The protective plywood covering drops to the ground.
3. Remove the condenser coil protective covering.
4. Remove the toolless doorknobs and instruction packet, see Figure 3.

Item	Description
A	Condenser coil protective covering
B	Barometric relief hood in shipping location (if included)

Figure 2: Condenser covering

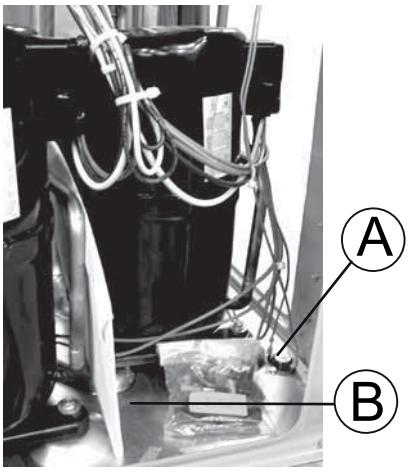

Item	Description
A	Toolless doorknob
B	Installation instruction packet

Figure 3: Compressor section

5. If a factory option convenience outlet is installed, you must install the weatherproof outlet in the field. The cover is located behind the filter access panel.
   a. Remove the shipping label that covers the convenience outlet.
   b. Follow the instructions on the back of the weatherproof cover box.
   c. Attach the cover to the unit with the four screws provided.

⚠CAUTION

208/230-3-60 and 380/415-3-50 units with a factory-installed powered convenience outlet option are wired for 230v and 415v power supply respectively. Change the tap on the transformer for 208-3-60 or 380-3-50 operation. See the unit wiring diagram.

Limitations

These units must be installed in accordance with the following:

In the U.S.A.:

1. National Electrical Code, ANSI/NFPA No. 70 - latest edition
2. National Fuel Gas Code, ANSI Z223.1 - latest edition
3. Gas-Fired Central Furnace Standard, ANSI Z21.47a. - latest edition
4. Local building codes
5. Local gas utility requirements

In Canada:

1. Canadian Electrical Code, CSA C22.1
2. Installation Codes, CSA - B149.1
3. Local plumbing and waste water codes
4. Other applicable local codes

Refer to unit application data found in this document.

After the installation is complete, you must adjust gas fired units to obtain a temperature rise within the range specified on the unit rating plate.

If components are added to a unit to meet local codes, they are installed at the dealer's and/or customer's expense.

The size of the unit for the proposed installation must be based on a heat loss/heat gain calculation made according to the methods of the Air Conditioning Contractors of America (ACCA).

This furnace is not to be used for temporary heating of buildings or structures under construction.

⚠ CAUTION

The Smart Equipment™ control board used in this product can effectively operate the cooling system down to 0°F when this product is applied in a comfort cooling application for people. An economizer is typically included in this type of application. When you apply this product for process cooling applications (such as computer rooms or switchgear), please call the applications department for Ducted Systems @ 1-877-874-SERV for guidance. Additional accessories may be needed for stable operation at temperatures below 30°F.

Unit components

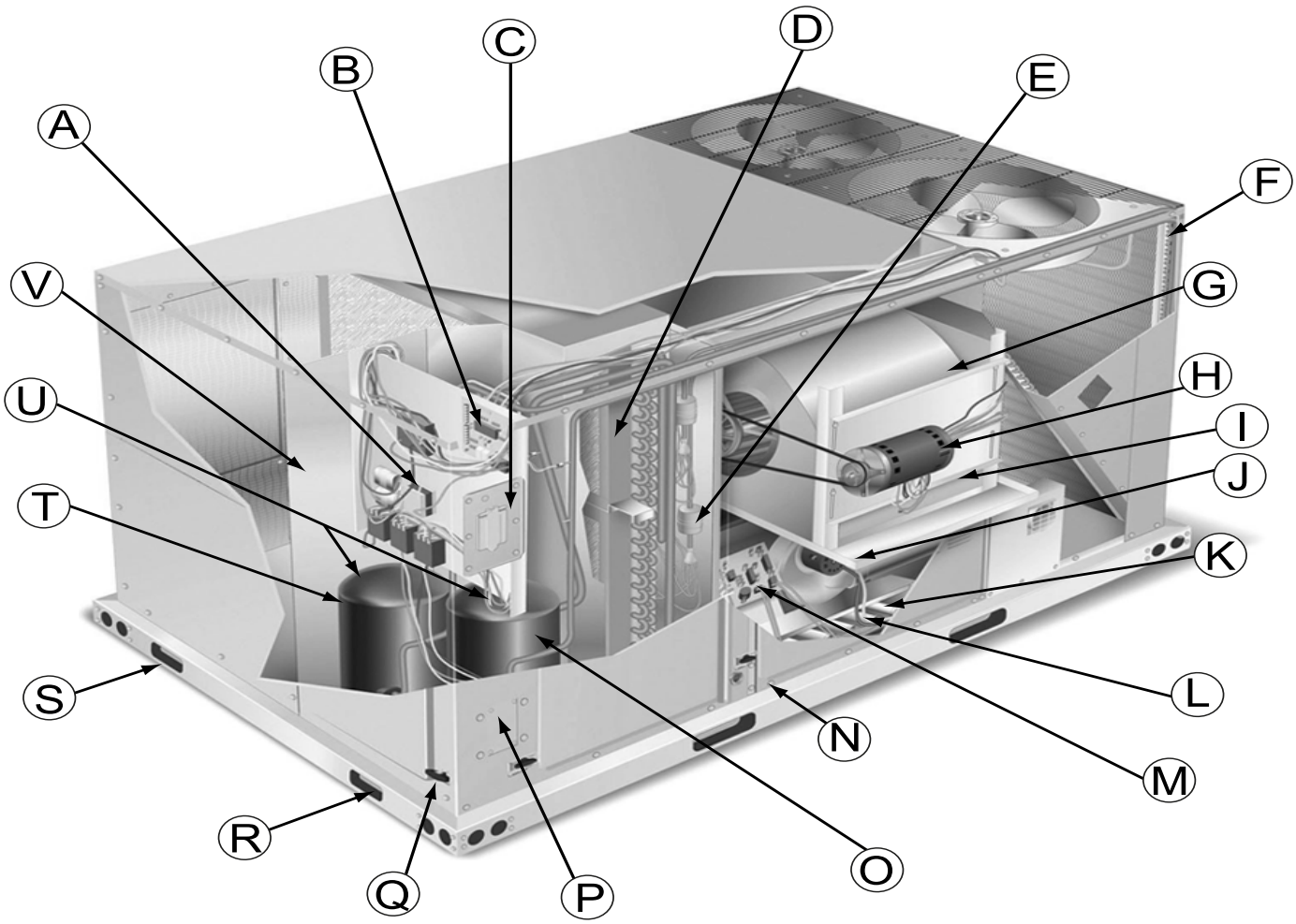

Figure 4: Component location

Figure 4 shows the ZR120 model. Table 1 lists the components of the unit.

Table 1: Component location table

Item	Description
A	Terminal block for high-voltage connection
B	Smart Equipment™ control board with screw connector for thermostat wiring and network connections
C	Disconnect location (optional disconnect switch)
D	Filter access (2 in. or 4 in. filter options)
E	Filter drier (solid core)
F	Micro-channel aluminum tube/aluminum fin condenser
G	Slide-out motor and blower assembly for easy adjustment and service
H	Belt-drive blower motor
I	VFD Location (optional)
J	Power ventor motor
K	20-gauge aluminized steel tubular heat exchanger for long life (stainless steel option)

Item	Description
L	Two-stage gas heating to maintain warm, comfortable temperature
M	Intelligent control board for safe and efficient operation
N	Slide out drain pan with 1 inch NPT, female connection
O	Compressor #1 access (high-efficiency compressor)
P	Side entry power and control knockouts
Q	Toolless door latch
R	Roof curbs in eight-inch and fourteen-inch heights[1]
S	Base rails with forklift slots (three sides) and lifting holes
T	Compressor #2 access (high-efficiency compressor)
U	Dual stage cooling for maximum comfort
V	Second model nameplate inside hinged access panel

1. Roof curbs for transitioning from Sunline™ footprint to the ZR Series footprints are also available (field-installed accessory).

Table 2: ZR078-150 unit limitations

Size (tons)	Model	Unit voltage	Unit limitations		
			Applied voltage		Outdoor DB temp
			Minimum	Maximum	Maximum (°F)
078 (6.5)	ZR	208/230-3-60	187	252	125
		460-3-60	432	504	125
		575-3-60	540	630	125
090 (7.5)	ZR	208/230-3-60	187	252	125
		460-3-60	432	504	125
		575-3-60	540	630	125
102 (8.5)	ZR	208/230-3-60	187	252	125
		460-3-60	432	504	125
		575-3-60	540	630	125
120 (10)	ZR	208/230-3-60	187	252	125
		460-3-60	432	504	125
		575-3-60	540	630	125
150 (12.5)	ZR	208/230-3-60	187	252	125
		460-3-60	432	504	125
		575-3-60	540	630	125

⚠WARNING

Excessive exposure of the furnace to contaminated combustion air may result in equipment damage or personal injury. Typical contaminates include the following items:

- Permanent wave solution
- Chlorinated waxes and cleaners
- Chlorine based swimming pool chemicals
- Water softening chemicals
- Carbon tetrachloride
- Halogen type refrigerants
- Cleaning solvents (for example, perchloroethylene)
- Printing inks
- Paint removers
- Varnishes
- Hydrochloric acid
- Cements and glues
- Anti static fabric softeners for clothes dryers
- Masonry acid washing materials

Location

Use the following guidelines to select a suitable location for these units:

- The unit is designed for *outdoor installation only*.
- Condenser coils must have an unlimited supply of air. Where a choice of location is possible, position the unit on either the north or east side of the building.
- Suitable for mounting on roof curb.
- For ground level installation, use a level concrete slab with a minimum thickness of 4 inches. The length and width must be at least 6 inches greater than the unit base rails. Do not tie the slab to the building foundation.
- Roof structures must be able to support the weight of the unit and its options and accessories. The unit must be installed on a solid, level roof curb or appropriate angle iron frame.
- Maintain level tolerance to 1/2 inch across the entire width and length of the unit.

Clearances

All units require particular clearances for proper operation and service. The installer must make provisions for adequate combustion and ventilation air in accordance with section 5.3 of Air for Combustion and Ventilation of the National Fuel Gas Code, ANSI Z223.1 – latest edition (in the U.S.A.), or Sections 7.2, 7.3, or 7.4 of Gas Installation Codes, CSA-B149.1 (in Canada) - latest edition, and/or applicable provisions of the local building codes. See Table 6 for the clearances required for combustible construction, servicing, and proper unit operation.

⚠WARNING

Do not permit overhanging structures or shrubs to obstruct the condenser air discharge outlet, combustion air inlet, or vent outlets.

Rigging and handling

Exercise care when you move the unit. Do not remove any packaging until the unit is near the place of installation. To rig the unit, attach chain or cable slings to the lifting holes provided in the base rails. You must use spreader bars across the top of the unit. The spreader bars must have a length that exceeds the largest dimension across the unit.

⚠ CAUTION

If a unit is installed on a roof curb other than a Ducted Systems roof curb, you must apply gasketing to all surfaces that come in contact with the unit underside.

⚠ CAUTION

Before lifting the unit, make sure that the unit weight is distributed equally on the rigging cables so that it lifts evenly.

Units may be moved or lifted with a forklift. Slotted openings in the base rails are provided for this purpose.

THE LENGTH OF THE FORKS MUST BE A MINIMUM OF 60 INCHES.

⚠ CAUTION

All panels must be secured in place when the unit is lifted.

The condenser coils must be protected from rigging cable damage with plywood or other suitable material.

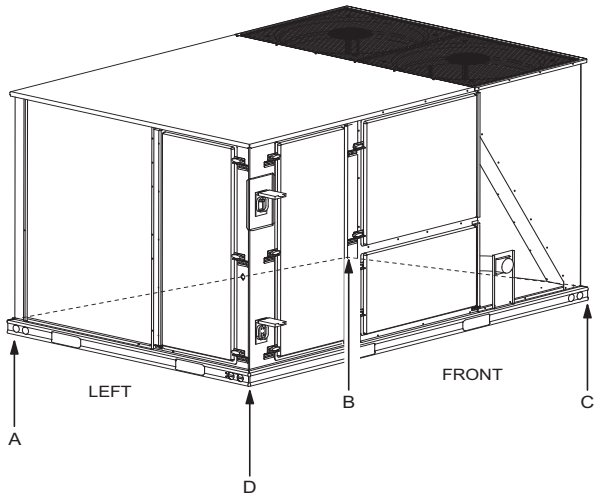

Figure 5: Unit 4 point load weight

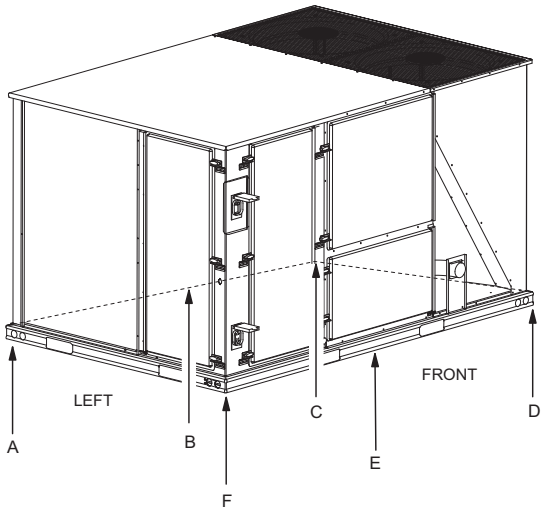

Figure 6: Unit 6 point load weight

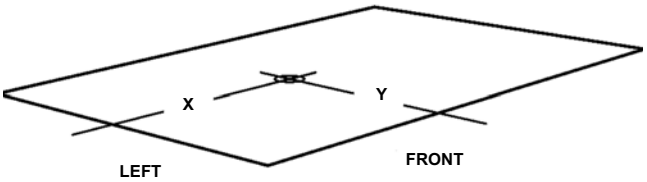

Figure 7: Center of gravity

Table 3: Weights and dimensions

Size (tons)	Model	Weight (lbs.)		Center of gravity		4 point load location (lbs.)				6 point load location (lbs.)					
		Shipping	Operating	X	Y	A	B	C	D	A	B	C	D	E	F
078 (6.5)	ZR	962	957	38	23	214	159	249	335	150	122	101	159	191	234
090 (7.5)	ZR	970	965	38	23	216	161	251	337	151	123	102	160	193	236
102 (8.5)	ZR	1205	1200	38	25.5	297	221	291	390	208	170	141	185	223	274
120 (10)	ZR	1205	1200	38	25.5	297	221	291	390	208	170	141	185	223	274
150 (12.5)	ZR	1470	1465	51	25.5	270	363	477	355	172	207	254	334	272	226

Table 4: ZR078-150 unit accessory weights

Unit accessory	Weight (lbs.)	
	Shipping	Operating
Economizer	90	85
Power Exhaust	155	150
Electric Heat[1]	80	80
Gas Heat[2]	110	110

1. Weight given is for the maximum heater size available (54KW).
2. Weight given is for the maximum number of tube heat exchangers available (8 tube).

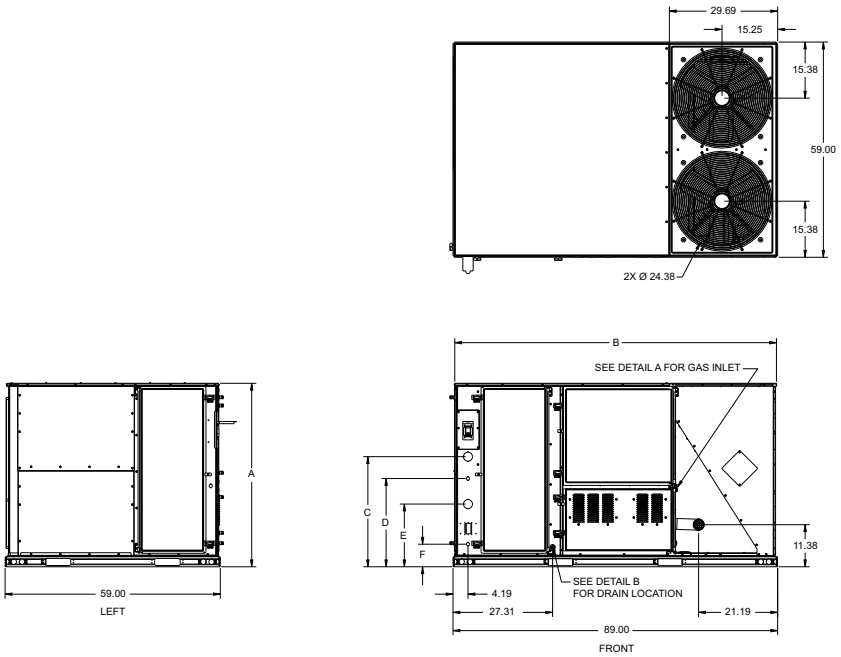

Figure 8: ZR078-120 physical dimensions

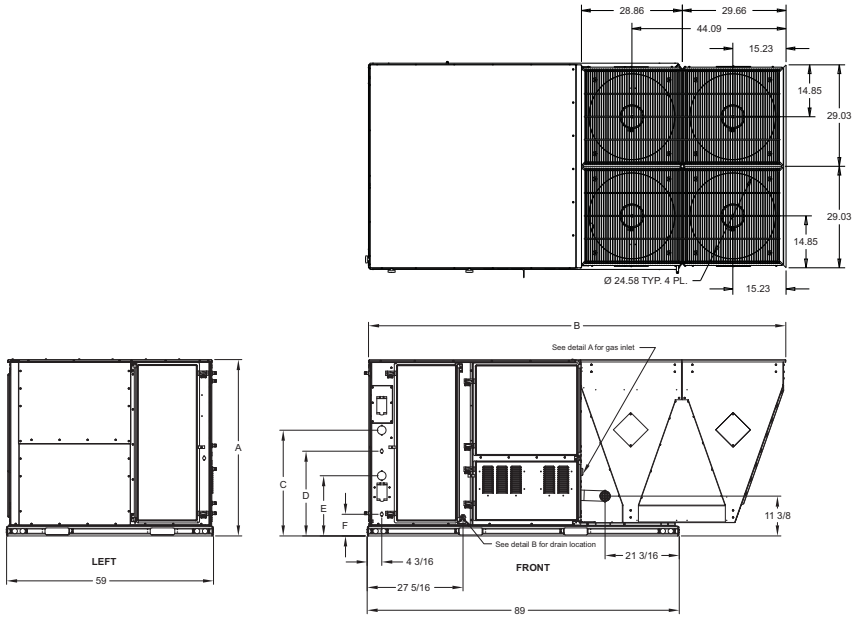

Figure 9: ZR150 physical dimensions

Table 5: ZR078-150 unit physical dimensions

Unit model number	Dimension (in.)					
	A	B	C	D	E	F
ZR078	42	89	22 1/8	18 3/16	15 3/16	6 3/16
ZR090	42	89	22 1/8	18 3/16	15 3/16	6 3/16
ZR102	50 3/4	89	30 3/16	24 3/16	17 3/16	6 3/16
ZR120	50 3/4	89	30 3/16	24 3/16	17 3/16	6 3/16
ZR150	50 3/4	119 1/2	30 3/16	24 3/16	17 3/16	6 3/16

Detail A

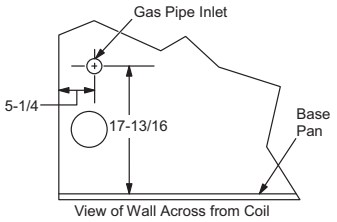

Detail B

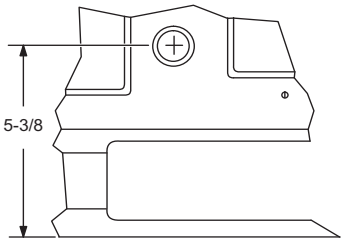

Table 6: ZR078-150 unit clearances

Direction	Distance (in.)	Direction	Distance (in.)
Top[1]	72	Right	12
Front	36	Left	36
Rear	36	Bottom[2]	0

1. Units must be installed outdoors. Make sure that overhanging structures or shrubs do not obscure the condenser air discharge outlet.
2. Units may be installed on combustable floors made from wood or class A, B or C roof covering materials.

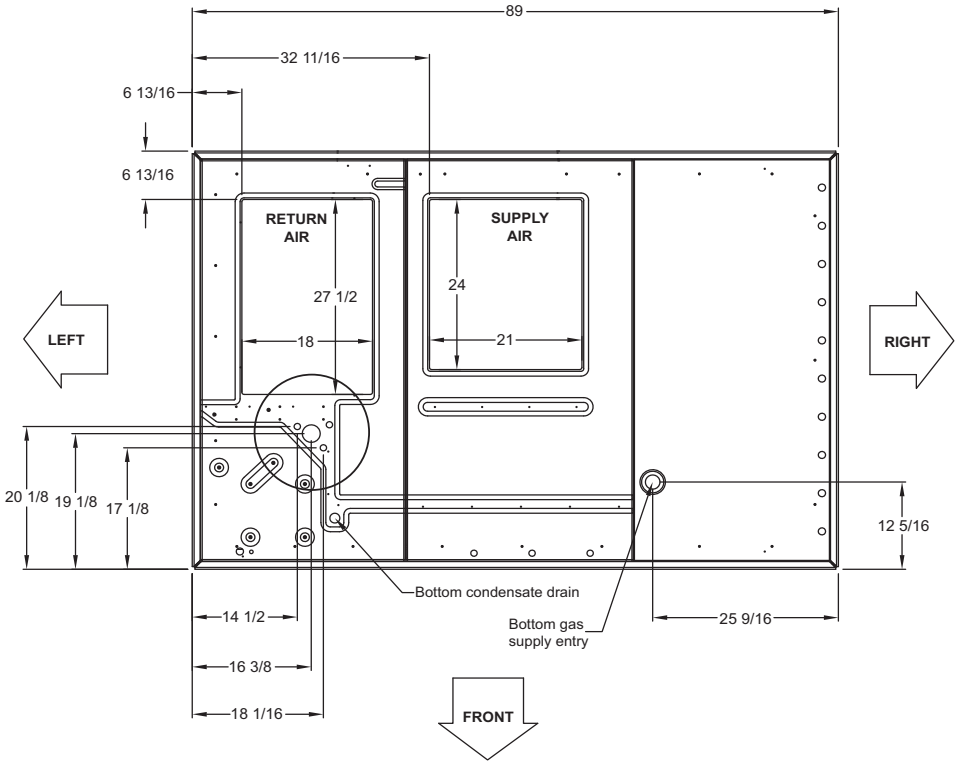

Figure 10: ZR078-150 unit bottom duct openings

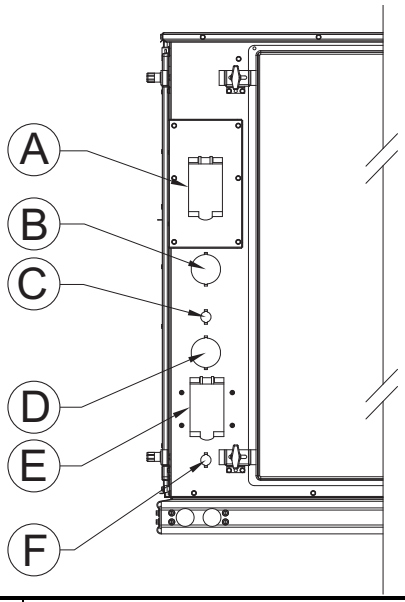

Item	Description
A	Disconnect switch cover
B	Power entry Ø 2-1/2
C	Control entry Ø 7/8
D	Power entry Ø 2-1/2
E	Convenience outlet cover
F	Convenience outlet power entry Ø 7/8

Figure 11: ZR078-150 unit electrical entry

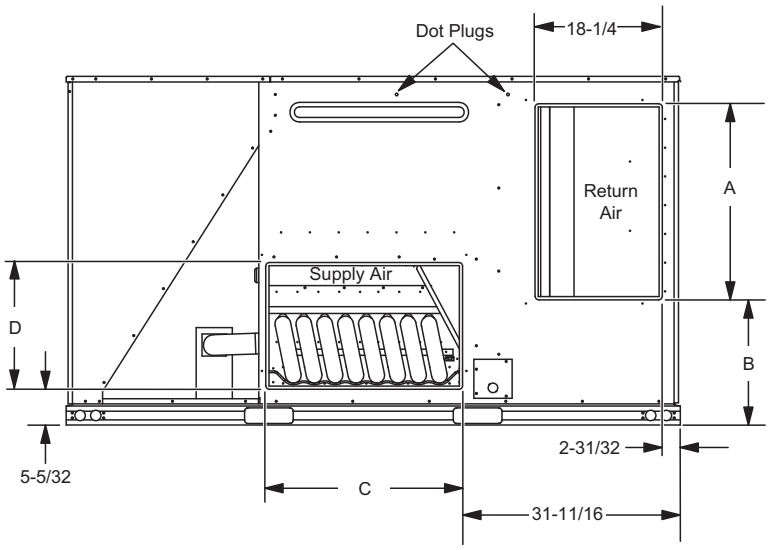

Figure 12: ZR078-120 unit side duct openings

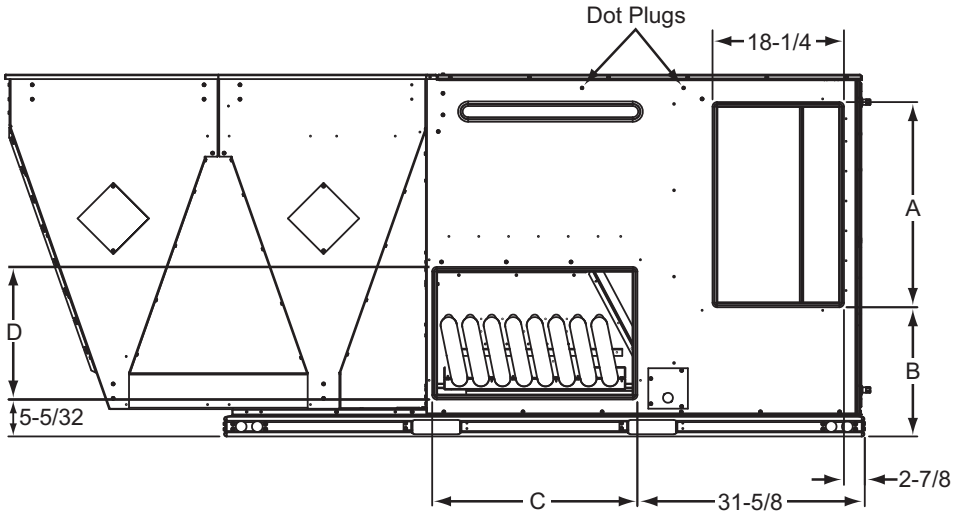

Figure 13: ZR150 unit side duct openings

Table 7: Side duct dimensions

Unit model number	Dimension (in.)			
	A	B	C	D
ZR078	27 3/4	12 1/16	27 1/2	16
ZR090	27 3/4	12 1/16	27 1/2	16
ZR102	28 1/4	18 1/16	28 1/4	18 1/4
ZR120	28 1/4	18 1/16	28 1/4	18 1/4
ZR150	28 1/4	18 1/16	28 1/4	18 1/4

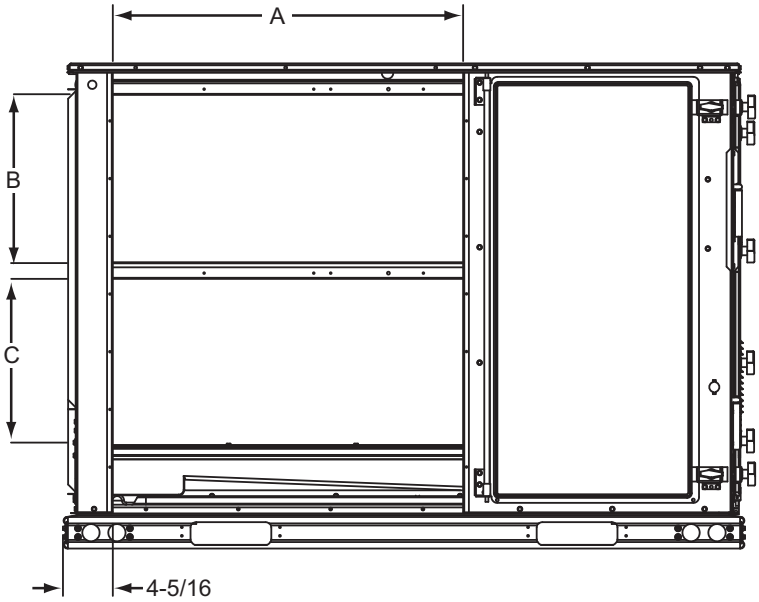

Figure 14: ZR078-150 unit/end left duct opening

Table 8: Left/end duct dimensions

Unit model number	Dimension (in.)		
	A	B	C
ZR078	30.357	13.365	22.516
ZR090	30.357	13.365	22.516
ZR102	30.358	22.580	22.330
ZR120	30.358	22.580	22.330
ZR150	30.358	22.580	22.330

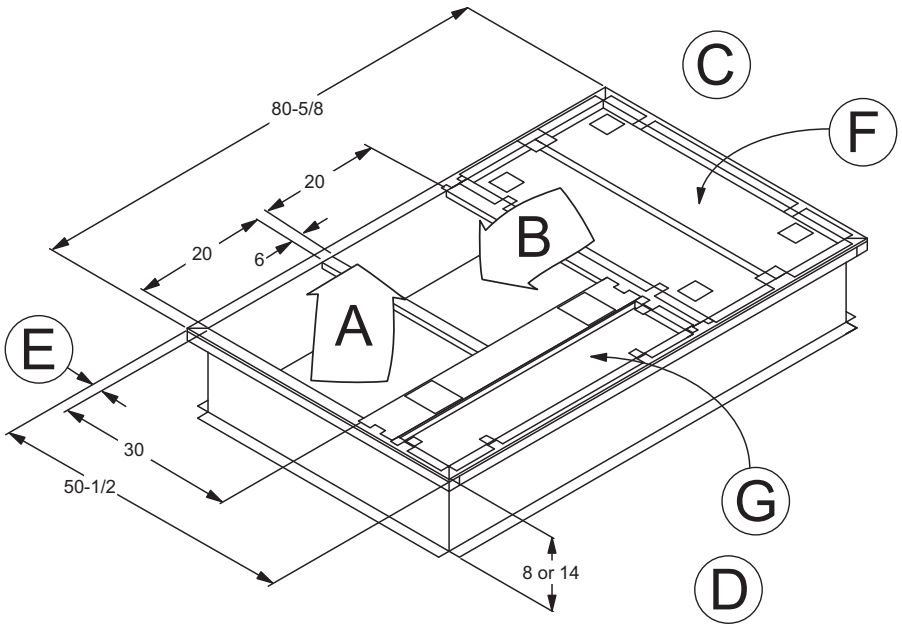

Figure 15: ZR078-150 roof curb

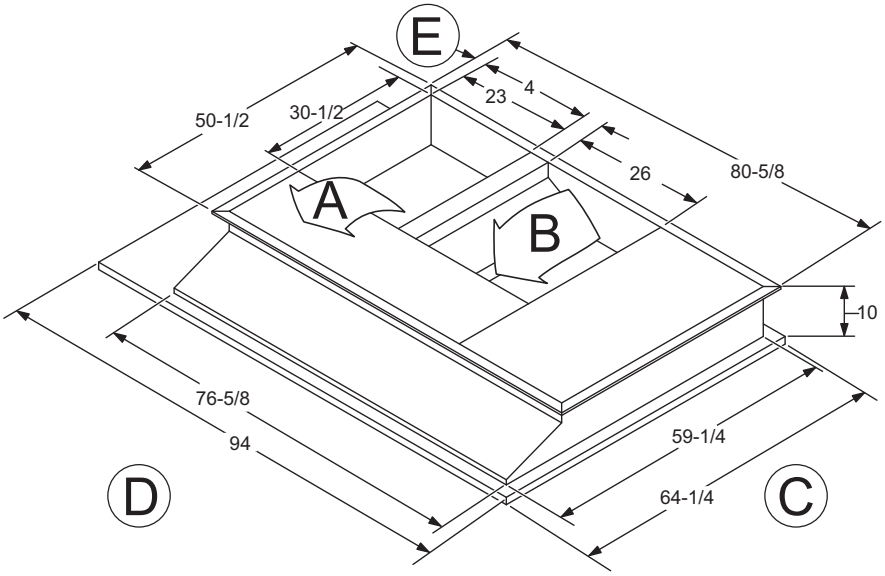

Figure 16: ZR078-150 transition roof curb

Roof curb components

Item	Description
A	Return air
B	Supply air
C	Right side of the unit
D	Front side of the unit
E	2 typ.
F	Insulated deck under the condenser section
G	Insulated deck under the compressor section

Ductwork

You must design and size ductwork according to the methods in Manual D of the Air Conditioning Contractors of America (ACCA) or as recommended by any other recognized authority such as ASHRAE or SMACNA. When you design the duct system, apply the following recommendations.

- Use a closed return duct system. This does not preclude the use of economizers or outdoor fresh air intake.
- Make the supply and return air duct connections at the unit with flexible joints to minimize noise.
- Design the supply and return air duct systems for the CFM and static pressure requirements of the job. Do not size them to match the dimensions of the duct connections on the unit.

See Figure 10 for bottom air duct openings. See Figures 12 and 13, and Table 7 for side air duct openings.

Duct covers

Units are shipped with the side duct openings covered.

For a bottom duct application, no duct cover changes are necessary.

For a side duct application, complete the following steps.

1. Remove the side duct covers.
2. Orient the supply panel with the painted surface up.
3. Slide the supply panel between the heat exchanger and the unit bottom. The painted surface must face the heat exchanger. The space is narrow but there is adequate room to install the panel.
4. Secure the supply panel with the factory-installed bracket and two screws.
5. Orient the return panel with the painted surface down.
6. Install the return panel over the corresponding side duct. the painted surface must face the down flow duct opening.
7. Secure the return panel with four screws.

⚠ CAUTION

When you fasten ductwork to the side duct flanges on the unit, insert the screws through duct flanges only. DO NOT insert the screws through the casing. You must insulate and water-proof outdoor ductwork.

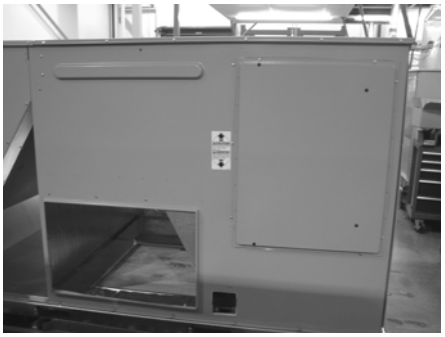

Figure 17: Side panels with hole plugs

Note: Note the orientation of the panel with the insulation side facing up.

Figure 18: Return down flow plenum with panel

Figure 19: Discharge panel in place

Side panels

Units are shipped with side panels to cover the area where an economizer or motorized damper may be installed. You must keep these panels to use them as tops for the economizer rain hoods (see Figure 20).

Figure 20: Save side panels for economizer hood tops

Condensate drain

The side condensate drain is reversible and maybe re-oriented to the rear of the cabinet to facilitate condensate piping. A condensate drain connection is available through the base pan for piping inside the roof curb.

Note: Plumbing must conform to local codes.

To install the connection, complete the following steps.

1. Trap the connection according to Figure 21.

Note: You must protect the trap and drain lines from freezing.

2. Install the condensate drain line from the 1 inch NPT female connection on the unit to an open drain. Use a sealing compound on male pipe threads.

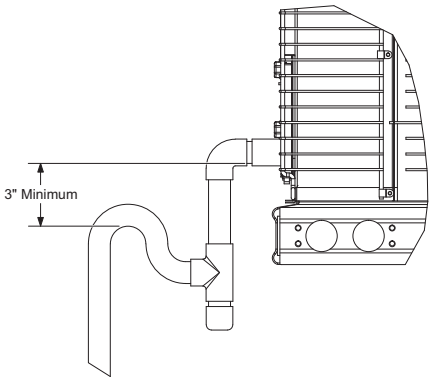

Figure 21: Condensate drain

Compressors

The scroll compressor used in this product is specifically designed to operate with R-410A refrigerant and cannot be interchanged.

⚠ CAUTION

This system uses R-410A refrigerant which operates at higher pressures than R-22. No other refrigerant may be used in this system.

The compressor also uses a polyolester (POE oil), Mobil 3MA POE. This oil is extremely hygroscopic, meaning it absorbs water readily. POE oil can absorb 15 times as much water as other oils designed for HCFC and CFC refrigerants. Take all the necessary precautions to avoid exposure of the oil to the atmosphere.

⚠ CAUTION

Do not leave the system open to the atmosphere. Unit damage could occur due to moisture being absorbed by the **POE oil** in the system. This type of oil is highly susceptible to moisture absorption

POE (polyolester) compressor lubricants are known to cause long term damage to some synthetic roofing materials.

⚠ CAUTION

Exposure, even if immediately cleaned up, may cause embrittlement (leading to cracking) to occur in one year or more. When you perform any service that may risk exposure of compressor oil to the roof, take precautions to protect the roofing.

Procedures that risk oil leakage include, but are not limited to the following:

- Compressor replacement
- Repairing refrigerant leaks
- Replacing refrigerant components such as the filter drier, pressure switch, metering device or coil

Units are shipped with compressor mountings that are factory-adjusted and ready for operation.

⚠ CAUTION

Do not loosen compressor mounting bolts.

Filters

Two-inch filters are supplied with each unit. One-inch filters may be used with no modification to the filter racks.

Always install filters ahead of evaporator coil. Keep the filters clean and replace them with filters of the same size and type. Dirty filters reduce the capacity of the unit and result in frosted

coils or safety shutdown. See the physical data tables for the number and size of filters needed for the unit.

Do not operate the unit without filters properly installed.

⚠ CAUTION

Make sure that panel latches are properly positioned on the unit to maintain an airtight seal.

Power and control wiring

Field wiring to the unit, fuses, and disconnects must conform to provisions of National Electrical Code (NEC), ANSI/NFPA No. 70 – Latest Edition (in U.S.A.), current Canadian Electrical Code C221, and/or local ordinances. The unit must be electrically grounded in accordance with NEC and CEC as specified above and/or local codes.

Voltage tolerances must be maintained at the compressor terminals during starting and running conditions. The voltage tolerances are indicated on the unit rating plate and in Table 2.

⚠ CAUTION

208/230-3-60 and 380/415-3-50 units control transformers are factory wired for 230v and 415v power supply respectively. Change the tap on the transformer for 208-3-60 or 380-3-50 operation. See the unit wiring diagram.

The internal wiring harnesses furnished with this unit are an integral part of the design certified unit. Field alteration to comply with electrical codes is not required.

If any of the wire supplied with the unit must be replaced, replacement wire must be of the type shown on the wiring diagram and the same minimum gauge as the replaced wire.

A disconnect must be utilized for these units. Factory-installed disconnects are available.

⚠ CAUTION

Avoid damage to internal components if you drill holes to install a disconnect.

Note: Not all local codes allow the installation of a disconnect on the unit. Confirm compliance with local code before you install a disconnect on the unit.

Electrical line must be sized properly to carry the load.

Note: Use copper conductors only.

Each unit must be wired with a separate branch circuit fed directly from the meter panel and properly fused.

See Figures 22, 23, and 24 for typical field wiring. Refer to the appropriate unit wiring diagram mounted inside the control doors for control circuit and power wiring information.

⚠ CAUTION

When you connect electrical power and control wiring to the unit, you must use water-proof connectors so that water or moisture cannot be drawn into the unit during normal operation. These water-proofing conditions also apply when you install a field-supplied disconnect switch.

Power wiring detail

Units are factory wired for the voltage shown on the unit nameplate. See Table 10, *Electrical data,* on page 20 to size power wiring, fuses, and the disconnect switch.

Power wiring is brought into the unit through the side of the unit or the basepan inside the curb.

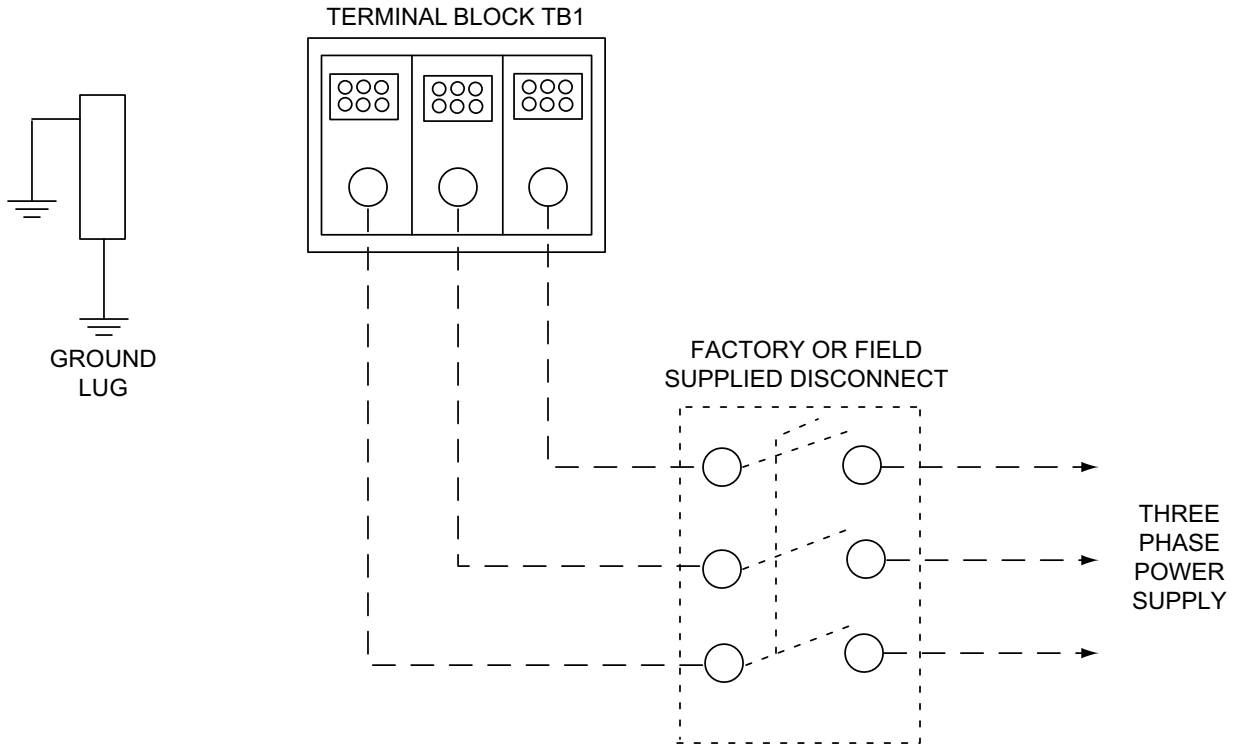

Figure 22: Typical field wiring disconnect - cooling unit with or without electric heat

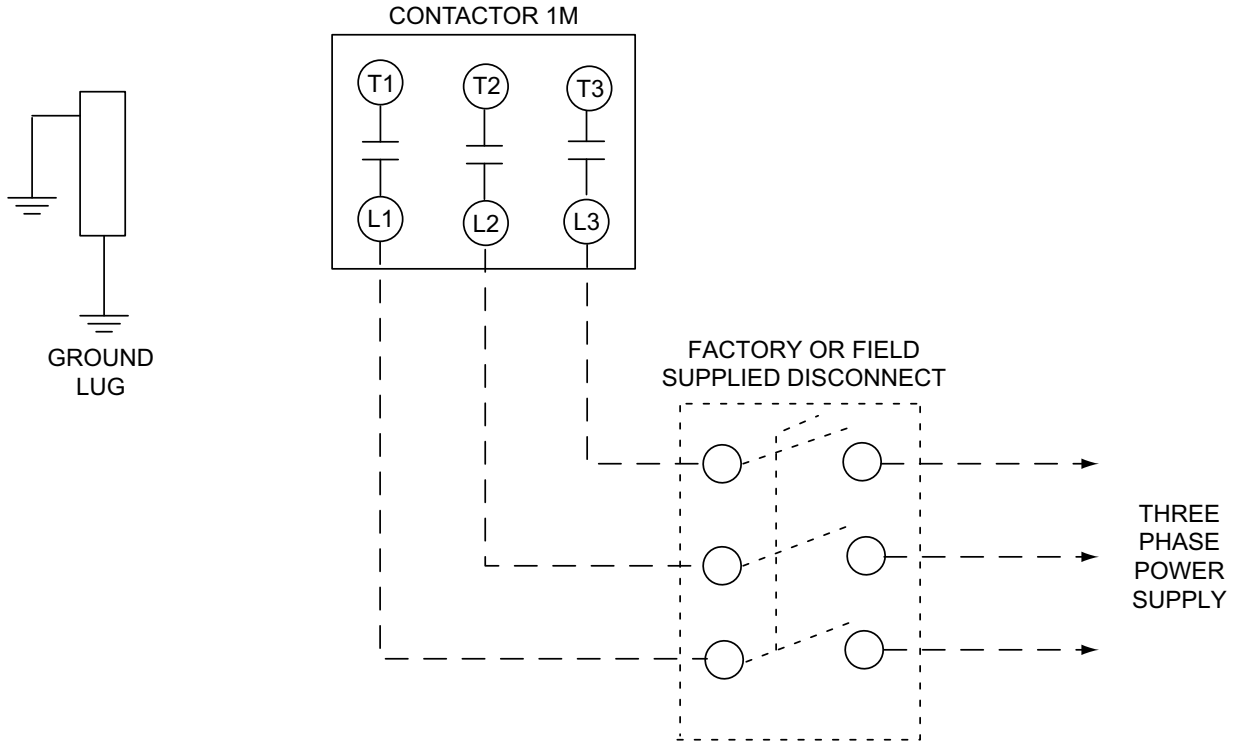

Figure 23: Typical field wiring disconnect - cooling unit with gas heat

Thermostat wiring

Install the thermostat on an inside wall approximately 56 inches above the floor. The thermostat must not be subject to drafts, sun exposure, or heat from electrical fixtures or appliances.

Follow the manufacturer's instructions enclosed with thermostat for the general installation procedure. Use color-coded, insulated wires to connect the thermostat to the unit. See Table 9 for control wire sizing and maximum length.

Table 9: Control wire sizes

Wire size	Maximum length[1]
18 AWG	150 feet

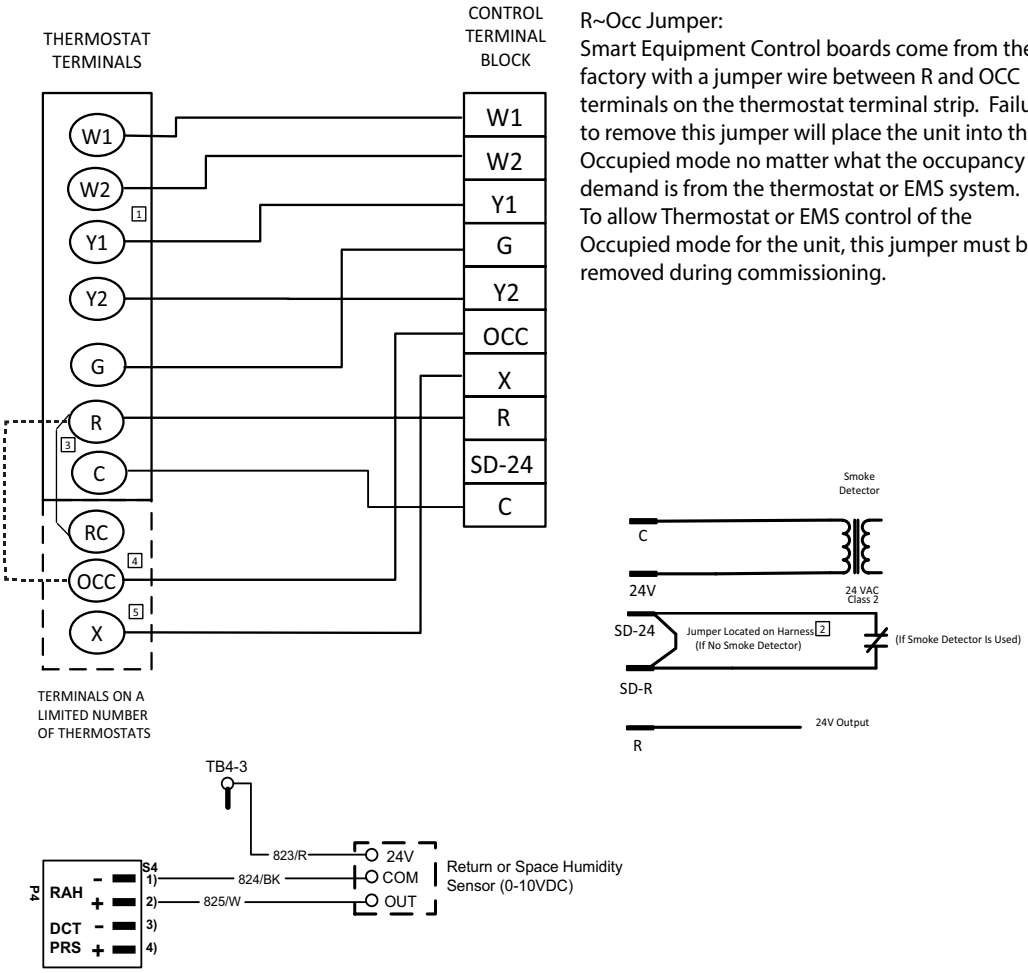

R~Occ Jumper:
Smart Equipment Control boards come from the factory with a jumper wire between R and OCC terminals on the thermostat terminal strip. Failure to remove this jumper will place the unit into the Occupied mode no matter what the occupancy demand is from the thermostat or EMS system. To allow Thermostat or EMS control of the Occupied mode for the unit, this jumper must be removed during commissioning.

1 Second stage heating not required on single stage heating units.
2 Jumper is required if there is no Smoke Detector circuit.
3 Jumper is required for any combination of R, RC, or RH.
4 OCC is an output from the thermostat to indicate the Occupied condition.
5 X is an input to the thermostat to display Error Status conditions.

Figure 24: Typical low voltage field wiring

⚠ CAUTION

208/230-3-60 and 380/415-3-50 units control transformers are factory wired for 230v and 415v power supply respectively. Change the tap on the transformer for 208-3-60 or 380-3-50 operation. See the unit wiring diagram.

Table 10: Electrical data

ZR078-150 standard motor - without powered convenience outlet

Size (tons)	Volt	Compressors (each)			OD fan motors (each)	Supply blower motor	Pwr exh motor	Pwr conv outlet	Electric heat option				MCA[1] (amps)	MCA[1] with pwr exh (amps)	Max fuse[2]/ breaker[3] size (amps)	Max fuse[2]/ breaker[3] size with pwr exh (amps)
		RLA	LRA	MCC	FLA	FLA	FLA	FLA	Model	kW	Stages	Amps				
078 (6.5)	208	13.5	88.0	21.1	2.1	5.2	5.5	0.0	None	-	-	-	39.8	45.3	50	50
									E09	6.8	1	18.9	39.8	45.3	50	50
									E18	13.5	2	37.5	53.3	60.2	60	70
									E24	18.0	2	50.0	69.0	75.8	70	80
									E36	25.5	2	70.8	95.0	101.9	100	110
	230	13.5	88.0	21.1	2.1	5.2	5.5	0.0	None	-	-	-	39.8	45.3	50	50
									E09	9.0	1	21.7	39.8	45.3	50	50
									E18	18.0	2	43.3	60.6	67.5	70	70
									E24	24.0	2	57.7	78.7	85.5	80	90
									E36	34.0	2	81.8	108.7	115.6	110	125
	460	6.0	44.0	9.3	1.3	2.6	2.2	0.0	None	-	-	-	18.6	20.8	20	25
									E09	9.0	1	10.8	18.6	20.8	20	25
									E18	18.0	2	21.7	30.3	33.1	35	35
									E24	24.0	2	28.9	39.3	42.1	40	45
									E36	34.0	2	40.9	54.4	57.1	60	60
	575	4.9	34.0	7.7	0.7	2.0	1.8	0.0	None	-	-	-	14.3	16.1	15	20
									E09	9.0	1	8.7	14.3	16.1	15	20
									E18	18.0	2	17.3	24.2	26.4	25	30
									E24	24.0	2	23.1	31.4	33.6	35	35
									E36	34.0	2	32.7	43.4	45.6	45	50
090 (7.5)	208	13.1	83.1	20.5	2.1	5.2	5.5	0.0	None	-	-	-	38.9	44.4	50	50
									E09	6.8	1	18.9	38.9	44.4	50	50
									E18	13.5	2	37.5	53.3	60.2	60	70
									E24	18.0	2	50.0	69.0	75.8	70	80
									E36	25.5	2	70.8	95.0	101.9	100	110
	230	13.1	83.1	20.5	2.1	5.2	5.5	0.0	None	-	-	-	38.9	44.4	50	50
									E09	9.0	1	21.7	38.9	44.4	50	50
									E18	18.0	2	43.3	60.6	67.5	70	70
									E24	24.0	2	57.7	78.7	85.5	80	90
									E36	34.0	2	81.8	108.7	115.6	110	125
	460	6.1	41.0	9.5	1.3	2.6	2.2	0.0	None	-	-	-	18.8	21.0	20	25
									E09	9.0	1	10.8	18.8	21.0	20	25
									E18	18.0	2	21.7	30.3	33.1	35	35
									E24	24.0	2	28.9	39.3	42.1	40	45
									E36	34.0	2	40.9	54.4	57.1	60	60
	575	4.4	33.0	6.8	0.7	2.0	1.8	0.0	None	-	-	-	13.2	15.0	15	15
									E09	9.0	1	8.7	13.3	15.6	15	20
									E18	18.0	2	17.3	24.2	26.4	25	30
									E24	24.0	2	23.1	31.4	33.6	35	35
									E36	34.0	2	32.7	43.4	45.6	45	50
102 (8.5)	208	14.5	98.0	22.6	2.1	6.8	5.5	0.0	None	-	-	-	43.6	49.1	50	60
									E09	6.8	1	18.9	43.6	49.1	50	60
									E18	13.5	2	37.5	55.3	62.2	60	70
									E24	18.0	2	50.0	71.0	77.8	80	80
									E36	25.5	2	70.8	97.0	103.9	100	110
	230	14.5	98.0	22.6	2.1	6.8	5.5	0.0	None	-	-	-	43.6	49.1	50	60
									E09	9.0	1	21.7	43.6	49.1	50	60
									E18	18.0	2	43.3	62.6	69.5	70	70
									E24	24.0	2	57.7	80.7	87.5	90	90
									E36	34.0	2	81.8	110.7	117.6	125	125
	460	6.3	55.0	9.9	1.3	3.4	2.2	0.0	None	-	-	-	20.1	22.3	25	25
									E09	9.0	1	10.8	20.1	22.3	25	25
									E18	18.0	2	21.7	31.3	34.1	35	35
									E24	24.0	2	28.9	40.3	43.1	45	45
									E36	34.0	2	40.9	55.4	58.1	60	60
	575	6.0	41.0	9.4	0.7	2.4	1.8	0.0	None	-	-	-	17.2	19.0	20	25
									E09	9.0	1	8.7	17.2	19.0	20	25
									E18	18.0	2	17.3	24.7	26.9	25	30
									E24	24.0	2	23.1	31.9	34.1	35	35
									E36	34.0	2	32.7	43.9	46.1	45	50

ZR078-150 standard motor - without powered convenience outlet (continued)

Size (tons)	Volt	Compressors (each)			OD fan motors (each)	Supply blower motor	Pwr exh motor	Pwr conv outlet	Electric heat option				MCA[1] (amps)	MCA[1] with pwr exh (amps)	Max fuse[2]/ breaker[3] size (amps)	Max fuse[2]/ breaker[3] size with pwr exh (amps)
		RLA	LRA	MCC	FLA	FLA	FLA	FLA	Model	kW	Stages	Amps				
120 (10)	208	16.0	110.0	24.9	3.0	6.8	5.5	0.0	None	-	-	-	48.9	54.4	60	70
									E18	13.5	2	37.5	55.3	62.2	60	70
									E24	18.0	2	50.0	71.0	77.8	80	80
									E36	25.5	2	70.8	97.0	103.9	100	110
									E54	40.6	2	112.7	149.4	156.2	150	175
	230	16.0	110.0	24.9	3.0	6.8	5.5	0.0	None	-	-	-	48.9	54.4	60	70
									E18	18.0	2	43.3	62.6	69.5	70	70
									E24	24.0	2	57.7	80.7	87.5	90	90
									E36	34.0	2	81.8	110.7	117.6	125	125
									E54	54.0	2	129.9	138.4	145.3	150	175
	460	7.8	52.0	12.1	1.6	3.4	2.2	0.0	None	-	-	-	24.2	26.4	30	30
									E18	18.0	2	21.7	31.3	34.1	35	35
									E24	24.0	2	28.9	40.3	43.1	45	45
									E36	34.0	2	40.9	55.4	58.1	60	60
									E54	54.0	2	65.0	69.2	72.0	80	80
	575	5.7	38.9	8.9	1.4	2.4	1.8	0.0	None	-	-	-	17.9	19.7	20	25
									E18	18.0	2	17.3	24.7	26.9	25	30
									E24	24.0	2	23.1	31.9	34.1	35	35
									E36	34.0	2	32.7	43.9	46.1	45	50
									E54	54.0	2	52.0	55.0	57.2	60	60
150 (12.5)	208	22.4	149.0	35.0	2.1	9.6	5.5	0.0	None	-	-	-	68.4	73.9	90	90
									E18	13.5	2	37.5	68.4	73.9	90	90
									E24	18.0	2	50.0	74.5	81.3	90	90
									E36	25.5	2	70.8	100.5	107.4	110	110
									E54	40.6	2	112.7	152.9	159.7	175	175
	230	22.4	149.0	35.0	2.1	9.6	5.5	0.0	None	-	-	-	68.4	73.9	90	90
									E18	18.0	2	43.3	68.4	73.9	90	90
									E24	24.0	2	57.7	84.2	91.0	90	100
									E36	34.0	2	81.8	114.2	121.1	125	125
									E54	54.0	2	129.9	141.9	148.8	175	175
	460	10.6	75.0	16.5	1.3	4.7	2.2	0.0	None	-	-	-	33.6	35.8	40	45
									E18	18.0	2	21.7	33.6	35.8	40	45
									E24	24.0	2	28.9	42.0	44.7	45	45
									E36	34.0	2	40.9	57.0	59.7	60	60
									E54	54.0	2	65.0	70.8	73.6	80	80
	575	7.7	54.0	12.0	0.7	3.6	1.8	0.0	None	-	-	-	23.6	25.4	30	30
									E18	18.0	2	17.3	26.2	28.4	30	30
									E24	24.0	2	23.1	33.4	35.6	35	40
									E36	34.0	2	32.7	45.4	47.6	50	50
									E54	54.0	2	52.0	56.5	58.7	70	70

1. Minimum Circuit Ampacity.
2. Dual Element, Time Delay Type.
3. HACR type per NEC.

ZR078-150 high static motor - without powered convenience outlet

Size (tons)	Volt	Compressors (each)			OD fan motors (each)	Supply blower motor	Pwr exh motor	Pwr conv outlet	Electric heat option				MCA[1] (amps)	MCA[1] with pwr exh (amps)	Max fuse[2]/ breaker[3] size (amps)	Max fuse[2]/ breaker[3] size with pwr exh (amps)
		RLA	LRA	MCC	FLA	FLA	FLA	FLA	Model	kW	Stages	Amps				
078 (6.5)	208	13.5	88.0	21.1	2.1	6.8	5.5	0.0	None	-	-	-	41.4	46.9	50	60
									E09	6.8	1	18.9	41.4	46.9	50	60
									E18	13.5	2	37.5	55.3	62.2	60	70
									E24	18.0	2	50.0	71.0	77.8	80	80
									E36	25.5	2	70.8	97.0	103.9	100	110
	230	13.5	88.0	21.1	2.1	6.8	5.5	0.0	None	-	-	-	41.4	46.9	50	60
									E09	9.0	1	21.7	41.4	46.9	50	60
									E18	18.0	2	43.3	62.6	69.5	70	70
									E24	24.0	2	57.7	80.7	87.5	90	90
									E36	34.0	2	81.8	110.7	117.6	125	125
	460	6.0	44.0	9.3	1.3	3.4	2.2	0.0	None	-	-	-	19.4	21.6	25	25
									E09	9.0	1	10.8	19.4	21.6	25	25
									E18	18.0	2	21.7	31.3	34.1	35	35
									E24	24.0	2	28.9	40.3	43.1	45	45
									E36	34.0	2	40.9	55.4	58.1	60	60
	575	4.9	34.0	7.7	0.7	2.4	1.8	0.0	None	-	-	-	14.7	16.5	15	20
									E09	9.0	1	8.7	14.7	16.5	15	20
									E18	18.0	2	17.3	24.7	26.9	25	30
									E24	24.0	2	23.1	31.9	34.1	35	35
									E36	34.0	2	32.7	43.9	46.1	45	50
090 (7.5)	208	13.1	83.1	20.5	2.1	9.6	5.5	0.0	None	-	-	-	43.3	48.8	50	60
									E09	6.8	1	18.9	43.3	48.8	50	60
									E18	13.5	2	37.5	58.8	65.7	60	70
									E24	18.0	2	50.0	74.5	81.3	80	90
									E36	25.5	2	70.8	100.5	107.4	110	110
	230	13.1	83.1	20.5	2.1	9.6	5.5	0.0	None	-	-	-	43.3	48.8	50	60
									E09	9.0	1	21.7	43.3	48.8	50	60
									E18	18.0	2	43.3	66.1	73.0	70	80
									E24	24.0	2	57.7	84.2	91.0	90	100
									E36	34.0	2	81.8	114.2	121.1	125	125
	460	6.1	41.0	9.5	1.3	4.7	2.2	0.0	None	-	-	-	20.9	23.1	25	25
									E09	9.0	1	10.8	20.9	23.1	25	25
									E18	18.0	2	21.7	32.9	35.7	35	40
									E24	24.0	2	28.9	42.0	44.7	45	45
									E36	34.0	2	40.9	57.0	59.7	60	60
	575	4.4	33.0	6.8	0.7	3.6	1.8	0.0	None	-	-	-	14.8	16.6	15	20
									E09	9.0	1	8.7	15.3	17.6	20	20
									E18	18.0	2	17.3	26.2	28.4	30	30
									E24	24.0	2	23.1	33.4	35.6	35	40
									E36	34.0	2	32.7	45.4	47.6	50	50
102 (8.5)	208	14.5	98.0	22.6	2.1	9.6	5.5	0.0	None	-	-	-	46.4	51.9	60	60
									E09	6.8	1	18.9	46.4	51.9	60	60
									E18	13.5	2	37.5	58.8	65.7	60	70
									E24	18.0	2	50.0	74.5	81.3	80	90
									E36	25.5	2	70.8	100.5	107.4	110	110
	230	14.5	98.0	22.6	2.1	9.6	5.5	0.0	None	-	-	-	46.4	51.9	60	60
									E09	9.0	1	21.7	46.4	51.9	60	60
									E18	18.0	2	43.3	66.1	73.0	70	80
									E24	24.0	2	57.7	84.2	91.0	90	100
									E36	34.0	2	81.8	114.2	121.1	125	125
	460	6.3	55.0	9.9	1.3	4.7	2.2	0.0	None	-	-	-	21.4	23.6	25	25
									E09	9.0	1	10.8	21.4	23.6	25	25
									E18	18.0	2	21.7	32.9	35.7	35	40
									E24	24.0	2	28.9	42.0	44.7	45	45
									E36	34.0	2	40.9	57.0	59.7	60	60
	575	6.0	41.0	9.4	0.7	3.6	1.8	0.0	None	-	-	-	18.4	20.2	20	25
									E09	9.0	1	8.7	18.4	20.2	20	25
									E18	18.0	2	17.3	26.2	28.4	30	30
									E24	24.0	2	23.1	33.4	35.6	35	40
									E36	34.0	2	32.7	45.4	47.6	50	50

ZR078-150 high static motor - without powered convenience outlet (continued)

Size (tons)	Volt	Compressors (each)			OD fan motors (each)	Supply blower motor	Pwr exh motor	Pwr conv outlet	Electric heat option				MCA[1] (amps)	MCA[1] with pwr exh (amps)	Max fuse[2]/ breaker[3] size (amps)	Max fuse[2]/ breaker[3] size with pwr exh (amps)
		RLA	LRA	MCC	FLA	FLA	FLA	FLA	Model	kW	Stages	Amps				
120 (10)	208	16.0	110.0	24.9	3.0	9.6	5.5	0.0	None	-	-	-	51.7	57.2	60	70
									E18	13.5	2	37.5	58.8	65.7	60	70
									E24	18.0	2	50.0	74.5	81.3	80	90
									E36	25.5	2	70.8	100.5	107.4	110	110
									E54	40.6	2	112.7	152.9	159.7	175	175
	230	16.0	110.0	24.9	3.0	9.6	5.5	0.0	None	-	-	-	51.7	57.2	60	70
									E18	18.0	2	43.3	66.1	73.0	70	80
									E24	24.0	2	57.7	84.2	91.0	90	100
									E36	34.0	2	81.8	114.2	121.1	125	125
									E54	54.0	2	129.9	141.9	148.8	175	175
	460	7.8	52.0	12.1	1.6	4.7	2.2	0.0	None	-	-	-	25.5	27.7	30	35
									E18	18.0	2	21.7	32.9	35.7	35	40
									E24	24.0	2	28.9	42.0	44.7	45	45
									E36	34.0	2	40.9	57.0	59.7	60	60
									E54	54.0	2	65.0	70.8	73.6	80	80
	575	5.7	38.9	8.9	1.4	3.6	1.8	0.0	None	-	-	-	19.1	20.9	20	25
									E18	18.0	2	17.3	26.2	28.4	30	30
									E24	24.0	2	23.1	33.4	35.6	35	40
									E36	34.0	2	32.7	45.4	47.6	50	50
									E54	54.0	2	52.0	56.5	58.7	70	70
150 (12.5)	208	22.4	149.0	35.0	2.1	14.0	5.5	0.0	None	-	-	-	72.8	78.3	90	100
									E18	13.5	2	37.5	72.8	78.3	90	100
									E24	18.0	2	50.0	80.0	86.8	90	100
									E36	25.5	2	70.8	106.0	112.9	110	125
									E54	40.6	2	112.7	158.4	165.2	175	175
	230	22.4	149.0	35.0	2.1	14.0	5.5	0.0	None	-	-	-	72.8	78.3	90	100
									E18	18.0	2	43.3	72.8	78.5	90	100
									E24	24.0	2	57.7	89.7	96.5	90	100
									E36	34.0	2	81.8	119.7	126.6	125	150
									E54	54.0	2	129.9	147.4	154.3	175	175
	460	10.6	75.0	16.5	1.3	6.6	2.2	0.0	None	-	-	-	35.5	37.7	45	45
									E18	18.0	2	21.7	35.5	38.1	45	45
									E24	24.0	2	28.9	44.3	47.1	45	50
									E36	34.0	2	40.9	59.4	62.1	60	70
									E54	54.0	2	65.0	73.2	76.0	80	90
	575	7.7	54.0	12.0	0.7	5.2	1.8	0.0	None	-	-	-	25.2	27.0	30	30
									E18	18.0	2	17.3	28.2	30.4	30	35
									E24	24.0	2	23.1	35.4	37.6	40	40
									E36	34.0	2	32.7	47.4	49.6	50	50
									E54	54.0	2	52.0	58.5	60.7	70	70

1. Minimum Circuit Ampacity.
2. Dual Element, Time Delay Type.
3. HACR type per NEC.

ZR078-150 standard motor - with powered convenience outlet

Size (tons)	Volt	Compressors (each)			OD fan motors (each)	Supply blower motor	Pwr exh motor	Pwr conv outlet	Electric heat option				MCA[1] (amps)	MCA[1] with pwr exh (amps)	Max fuse[2]/ breaker[3] size (amps)	Max fuse[2]/ breaker[3] size with pwr exh (amps)
		RLA	LRA	MCC	FLA	FLA	FLA	FLA	Model	kW	Stages	Amps				
078 (6.5)	208	13.5	88.0	21.1	2.1	5.2	5.5	10.0	None	-	-	-	49.8	55.3	60	60
									E09	6.8	1	18.9	49.8	55.3	60	60
									E18	13.5	2	37.5	65.8	72.7	70	80
									E24	18.0	2	50.0	81.5	88.3	90	90
									E36	25.5	2	70.8	107.5	114.4	110	125
	230	13.5	88.0	21.1	2.1	5.2	5.5	10.0	None	-	-	-	49.8	55.3	60	60
									E09	9.0	1	21.7	49.8	55.3	60	60
									E18	18.0	2	43.3	73.1	80.0	80	80
									E24	24.0	2	57.7	91.2	98.0	100	100
									E36	34.0	2	81.8	121.2	128.1	125	150
	460	6.0	44.0	9.3	1.3	2.6	2.2	5.0	None	-	-	-	23.6	25.8	25	30
									E09	9.0	1	10.8	23.6	25.8	25	30
									E18	18.0	2	21.7	36.6	39.3	40	40
									E24	24.0	2	28.9	45.6	48.3	50	50
									E36	34.0	2	40.9	60.6	63.4	70	70
	575	4.9	34.0	7.7	0.7	2.0	1.8	4.0	None	-	-	-	18.3	20.1	20	25
									E09	9.0	1	8.7	18.3	20.6	20	25
									E18	18.0	2	17.3	29.2	31.4	30	35
									E24	24.0	2	23.1	36.4	38.6	40	40
									E36	34.0	2	32.7	48.4	50.6	50	60
090 (7.5)	208	13.1	83.1	20.5	2.1	5.2	5.5	10.0	None	-	-	-	48.9	54.4	60	60
									E09	6.8	1	18.9	48.9	54.4	60	60
									E18	13.5	2	37.5	65.8	72.7	70	80
									E24	18.0	2	50.0	81.5	88.3	90	90
									E36	25.5	2	70.8	107.5	114.4	110	125
	230	13.1	83.1	20.5	2.1	5.2	5.5	10.0	None	-	-	-	48.9	54.4	60	60
									E09	9.0	1	21.7	48.9	54.4	60	60
									E18	18.0	2	43.3	73.1	80.0	80	80
									E24	24.0	2	57.7	91.2	98.0	100	100
									E36	34.0	2	81.8	121.2	128.1	125	150
	460	6.1	41.0	9.5	1.3	2.6	2.2	5.0	None	-	-	-	23.8	26.0	25	30
									E09	9.0	1	10.8	23.8	26.0	25	30
									E18	18.0	2	21.7	36.6	39.3	40	40
									E24	24.0	2	28.9	45.6	48.3	50	50
									E36	34.0	2	40.9	60.6	63.4	70	70
	575	4.4	33.0	6.8	0.7	2.0	1.8	4.0	None	-	-	-	17.2	19.0	20	20
									E09	9.0	1	8.7	18.3	20.6	20	25
									E18	18.0	2	17.3	29.2	31.4	30	35
									E24	24.0	2	23.1	36.4	38.6	40	40
									E36	34.0	2	32.7	48.4	50.6	50	60
102 (8.5)	208	14.5	98.0	22.6	2.1	6.8	5.5	10.0	None	-	-	-	53.6	59.1	60	70
									E09	6.8	1	18.9	53.6	59.1	60	70
									E18	13.5	2	37.5	67.8	74.7	70	80
									E24	18.0	2	50.0	83.5	90.3	90	100
									E36	25.5	2	70.8	109.5	116.4	110	125
	230	14.5	98.0	22.6	2.1	6.8	5.5	10.0	None	-	-	-	53.6	59.1	60	70
									E09	9.0	1	21.7	53.6	59.1	60	70
									E18	18.0	2	43.3	75.1	82.0	80	90
									E24	24.0	2	57.7	93.2	100.0	100	100
									E36	34.0	2	81.8	123.2	130.1	125	150
	460	6.3	55.0	9.9	1.3	3.4	2.2	5.0	None	-	-	-	25.1	27.3	30	30
									E09	9.0	1	10.8	25.1	27.3	30	30
									E18	18.0	2	21.7	37.6	40.3	40	45
									E24	24.0	2	28.9	46.6	49.3	50	50
									E36	34.0	2	40.9	61.6	64.4	70	70
	575	6.0	41.0	9.4	0.7	2.4	1.8	4.0	None	-	-	-	21.2	23.0	25	25
									E09	9.0	1	8.7	21.2	23.0	25	25
									E18	18.0	2	17.3	29.7	31.9	30	35
									E24	24.0	2	23.1	36.9	39.1	40	40
									E36	34.0	2	32.7	48.9	51.1	50	60

ZR078-150 standard motor - with powered convenience outlet (continued)

Size (tons)	Volt	Compressors (each)			OD fan motors (each)	Supply blower motor	Pwr exh motor	Pwr conv outlet	Electric heat option				MCA[1] (amps)	MCA[1] with pwr exh (amps)	Max fuse[2]/ breaker[3] size (amps)	Max fuse[2]/ breaker[3] size with pwr exh (amps)
		RLA	LRA	MCC	FLA	FLA	FLA	FLA	Model	kW	Stages	Amps				
120 (10)	208	16.0	110.0	24.9	3.0	6.8	5.5	10.0	None	-	-	-	58.9	64.4	70	80
									E18	13.5	2	37.5	67.8	74.7	70	80
									E24	18.0	2	50.0	83.5	90.3	90	100
									E36	25.5	2	70.8	109.5	116.4	110	125
									E54	40.6	2	112.7	161.9	168.7	175	175
	230	16.0	110.0	24.9	3.0	6.8	5.5	10.0	None	-	-	-	58.9	64.4	70	80
									E18	18.0	2	43.3	75.1	82.0	80	90
									E24	24.0	2	57.7	93.2	100.0	100	100
									E36	34.0	2	81.8	123.2	130.1	125	150
									E54	54.0	2	129.9	150.9	157.8	175	175
	460	7.8	52.0	12.1	1.6	3.4	2.2	5.0	None	-	-	-	29.2	31.4	35	35
									E18	18.0	2	21.7	37.6	40.3	40	45
									E24	24.0	2	28.9	46.6	49.3	50	50
									E36	34.0	2	40.9	61.6	64.4	70	70
									E54	54.0	2	65.0	75.5	78.2	80	90
	575	5.7	38.9	8.9	1.4	2.4	1.8	4.0	None	-	-	-	21.9	23.7	25	25
									E18	18.0	2	17.3	29.7	31.9	30	35
									E24	24.0	2	23.1	36.9	39.1	40	40
									E36	34.0	2	32.7	48.9	51.1	50	60
									E54	54.0	2	52.0	60.0	62.2	70	70
150 (12.5)	208	22.4	149.0	35.0	2.1	9.6	5.5	10.0	None	-	-	-	78.4	83.9	100	100
									E18	13.5	2	37.5	78.4	83.9	100	100
									E24	18.0	2	50.0	87.0	93.8	100	100
									E36	25.5	2	70.8	113.0	119.9	125	125
									E54	40.6	2	112.7	165.4	172.2	175	175
	230	22.4	149.0	35.0	2.1	9.6	5.5	10.0	None	-	-	-	78.4	83.9	100	100
									E18	18.0	2	43.3	78.6	85.5	100	100
									E24	24.0	2	57.7	96.7	103.5	100	110
									E36	34.0	2	81.8	126.7	133.6	150	150
									E54	54.0	2	129.9	154.4	161.3	175	175
	460	10.6	75.0	16.5	1.3	4.7	2.2	5.0	None	-	-	-	38.6	40.8	45	50
									E18	18.0	2	21.7	39.2	41.9	45	50
									E24	24.0	2	28.9	48.2	51.0	50	60
									E36	34.0	2	40.9	63.2	66.0	70	70
									E54	54.0	2	65.0	77.1	79.8	90	90
	575	7.7	54.0	12.0	0.7	3.6	1.8	4.0	None	-	-	-	27.6	29.4	35	35
									E18	18.0	2	17.3	31.2	33.4	35	35
									E24	24.0	2	23.1	38.4	40.6	40	45
									E36	34.0	2	32.7	50.4	52.6	60	60
									E54	54.0	2	52.0	61.5	63.7	70	70

1. Minimum Circuit Ampacity.
2. Dual Element, Time Delay Type.
3. HACR type per NEC.

ZR078-150 high static motor - with powered convenience outlet

Size (tons)	Volt	Compressors (each)			OD fan motors (each)	Supply blower motor	Pwr exh motor	Pwr conv outlet	Electric heat option				MCA[1] (amps)	MCA[1] with pwr exh (amps)	Max fuse[2]/ breaker[3] size (amps)	Max fuse[2]/ breaker[3] size with pwr exh (amps)
		RLA	LRA	MCC	FLA	FLA	FLA	FLA	Model	kW	Stages	Amps				
078 (6.5)	208	13.5	88.0	21.1	2.1	6.8	5.5	10.0	None	-	-	-	51.4	56.9	60	70
									E09	6.8	1	18.9	51.4	56.9	60	70
									E18	13.5	2	37.5	67.8	74.7	70	80
									E24	18.0	2	50.0	83.5	90.3	90	100
									E36	25.5	2	70.8	109.5	116.4	110	125
	230	13.5	88.0	21.1	2.1	6.8	5.5	10.0	None	-	-	-	51.4	56.9	60	70
									E09	9.0	1	21.7	51.4	56.9	60	70
									E18	18.0	2	43.3	75.1	82.0	80	90
									E24	24.0	2	57.7	93.2	100.0	100	100
									E36	34.0	2	81.8	123.2	130.1	125	150
	460	6.0	44.0	9.3	1.3	3.4	2.2	5.0	None	-	-	-	24.4	26.6	30	30
									E09	9.0	1	10.8	24.4	26.8	30	30
									E18	18.0	2	21.7	37.6	40.3	40	45
									E24	24.0	2	28.9	46.6	49.3	50	50
									E36	34.0	2	40.9	61.6	64.4	70	70
	575	4.9	34.0	7.7	0.7	2.4	1.8	4.0	None	-	-	-	18.7	20.5	20	25
									E09	9.0	1	8.7	18.8	21.1	20	25
									E18	18.0	2	17.3	29.7	31.9	30	35
									E24	24.0	2	23.1	36.9	39.1	40	40
									E36	34.0	2	32.7	48.9	51.1	50	60
090 (7.5)	208	13.1	83.1	20.5	2.1	9.6	5.5	10.0	None	-	-	-	53.3	58.8	60	70
									E09	6.8	1	18.9	53.3	58.8	60	70
									E18	13.5	2	37.5	71.3	78.2	80	80
									E24	18.0	2	50.0	87.0	93.8	90	100
									E36	25.5	2	70.8	113.0	119.9	125	125
	230	13.1	83.1	20.5	2.1	9.6	5.5	10.0	None	-	-	-	53.3	58.8	60	70
									E09	9.0	1	21.7	53.3	58.8	60	70
									E18	18.0	2	43.3	78.6	85.5	80	90
									E24	24.0	2	57.7	96.7	103.5	100	110
									E36	34.0	2	81.8	126.7	133.6	150	150
	460	6.1	41.0	9.5	1.3	4.7	2.2	5.0	None	-	-	-	25.9	28.1	30	30
									E09	9.0	1	10.8	25.9	28.4	30	30
									E18	18.0	2	21.7	39.2	41.9	40	45
									E24	24.0	2	28.9	48.2	51.0	50	60
									E36	34.0	2	40.9	63.2	66.0	70	70
	575	4.4	33.0	6.8	0.7	3.6	1.8	4.0	None	-	-	-	18.8	20.6	20	25
									E09	9.0	1	8.7	20.3	22.6	25	25
									E18	18.0	2	17.3	31.2	33.4	35	35
									E24	24.0	2	23.1	38.4	40.6	40	45
									E36	34.0	2	32.7	50.4	52.6	60	60
102 (8.5)	208	14.5	98.0	22.6	2.1	9.6	5.5	10.0	None	-	-	-	56.4	61.9	70	70
									E09	6.8	1	18.9	56.4	61.9	70	70
									E18	13.5	2	37.5	71.3	78.2	80	80
									E24	18.0	2	50.0	87.0	93.8	90	100
									E36	25.5	2	70.8	113.0	119.9	125	125
	230	14.5	98.0	22.6	2.1	9.6	5.5	10.0	None	-	-	-	56.4	61.9	70	70
									E09	9.0	1	21.7	56.4	61.9	70	70
									E18	18.0	2	43.3	78.6	85.5	80	90
									E24	24.0	2	57.7	96.7	103.5	100	110
									E36	34.0	2	81.8	126.7	133.6	150	150
	460	6.3	55.0	9.9	1.3	4.7	2.2	5.0	None	-	-	-	26.4	28.6	30	30
									E09	9.0	1	10.8	26.4	28.6	30	30
									E18	18.0	2	21.7	39.2	41.9	40	45
									E24	24.0	2	28.9	48.2	51.0	50	60
									E36	34.0	2	40.9	63.2	66.0	70	70
	575	6.0	41.0	9.4	0.7	3.6	1.8	4.0	None	-	-	-	22.4	24.2	25	30
									E09	9.0	1	8.7	22.4	24.2	25	30
									E18	18.0	2	17.3	31.2	33.4	35	35
									E24	24.0	2	23.1	38.4	40.6	40	45
									E36	34.0	2	32.7	50.4	52.6	60	60

ZR078-150 high static motor - with powered convenience outlet (continued)

Size (tons)	Volt	Compressors (each)			OD fan motors (each)	Supply blower motor	Pwr exh motor	Pwr conv outlet	Electric heat option				MCA[1] (amps)	MCA[1] with pwr exh (amps)	Max fuse[2]/ breaker[3] size (amps)	Max fuse[2]/ breaker[3] size with pwr exh (amps)
		RLA	LRA	MCC	FLA	FLA	FLA	FLA	Model	kW	Stages	Amps				
120 (10)	208	16.0	110.0	24.9	3.0	9.6	5.5	10.0	None	-	-	-	61.7	67.2	70	80
									E18	13.5	2	37.5	71.3	78.2	80	80
									E24	18.0	2	50.0	87.0	93.8	90	100
									E36	25.5	2	70.8	113.0	119.9	125	125
									E54	40.6	2	112.7	165.4	172.2	175	175
	230	16.0	110.0	24.9	3.0	9.6	5.5	10.0	None	-	-	-	61.7	67.2	70	80
									E18	18.0	2	43.3	78.6	85.5	80	90
									E24	24.0	2	57.7	96.7	103.5	100	110
									E36	34.0	2	81.8	126.7	133.6	150	150
									E54	54.0	2	129.9	154.4	161.3	175	175
	460	7.8	52.0	12.1	1.6	4.7	2.2	5.0	None	-	-	-	30.5	32.7	35	40
									E18	18.0	2	21.7	39.2	41.9	40	45
									E24	24.0	2	28.9	48.2	51.0	50	60
									E36	34.0	2	40.9	63.2	66.0	70	70
									E54	54.0	2	65.0	77.1	79.8	90	90
	575	5.7	38.9	8.9	1.4	3.6	1.8	4.0	None	-	-	-	23.1	24.9	25	30
									E18	18.0	2	17.3	31.2	33.4	35	35
									E24	24.0	2	23.1	38.4	40.6	40	45
									E36	34.0	2	32.7	50.4	52.6	60	60
									E54	54.0	2	52.0	61.5	63.7	70	70
150 (12.5)	208	22.4	149.0	35.0	2.1	14.0	5.5	10.0	None	-	-	-	82.8	88.3	100	110
									E18	13.5	2	37.5	82.8	88.3	100	110
									E24	18.0	2	50.0	92.5	99.3	100	110
									E36	25.5	2	70.8	118.5	125.4	125	150
									E54	40.6	2	112.7	170.9	177.7	175	200
	230	22.4	149.0	35.0	2.1	14.0	5.5	10.0	None	-	-	-	82.8	88.3	100	110
									E18	18.0	2	43.3	84.1	91.0	100	110
									E24	24.0	2	57.7	102.2	109.0	110	110
									E36	34.0	2	81.8	132.2	139.1	150	150
									E54	54.0	2	129.9	159.9	166.8	175	175
	460	10.6	75.0	16.5	1.3	6.6	2.2	5.0	None	-	-	-	40.5	42.7	50	50
									E18	18.0	2	21.7	41.6	44.3	50	50
									E24	24.0	2	28.9	50.6	53.3	60	60
									E36	34.0	2	40.9	65.6	68.4	70	70
									E54	54.0	2	65.0	79.5	82.2	90	90
	575	7.7	54.0	12.0	0.7	5.2	1.8	4.0	None	-	-	-	29.2	31.0	35	35
									E18	18.0	2	17.3	33.2	35.4	35	40
									E24	24.0	2	23.1	40.4	42.6	45	45
									E36	34.0	2	32.7	52.4	54.6	60	60
									E54	54.0	2	52.0	63.5	65.7	70	70

1. Minimum Circuit Ampacity.
2. Dual Element, Time Delay Type.
3. HACR type per NEC.

Table 11: ZR078-150 physical data

Component	Models									
	ZR078		ZR090		ZR102		ZR120		ZR150	
Nominal tonnage	**6.5**		**7.5**		**8.5**		**10**		**12.5**	
AHRI cooling performance										
Gross capacity @ AHRI A point (Mbh)	80000		90000		105000		124000		157000	
AHRI net capacity (Mbh)	78000		88000		102000[1]/100000[2]		118000		150000	
EER	11.2		11.2		11.2		11.2		11.0	
IEER with Constant Volume[3]	12.5		12.5		12.4[1]/12.2[2]		11.4		11.4	
IEER with Intellispeed	13		14.0[1]/13.8[2]		13.2[1]/13.0[2]		12.9[1]/12.7[2]		13.2[1]/13.0[2]	
CFM	2200		2775		3350		3750		4450	
System power (KW)	6.96		7.77		9.11		10.71		13.39	
Refrigerant type	R-410A		R-410A		R-410A		R-410A		R-410A	
Refrigerant charge (lb-oz)										
System 1	9-0		6-12		11-10		8-11		20-0	
System 2	5-8		6-0		10-3		7-8		19-0	
AHRI heating performance										
Heating model	N12	N18	N12	N18	N12	N18	N18	N24	N18	N24
Heat input (K Btu)	120	180	120	180	120	180	180	240	180	240
Heat output (K Btu)	96	144	96	144	96	144	144	192	144	192
AFUE %	-	-	-	-	-	-	-	-	-	-
Steady state efficiency (%)	80	80	80	80	80	80	80	80	80	80
No. burners	4	6	4	6	4	6	6	8	6	8
No. stages	2[4]	2[4]	2[4]	2[4]	2[4]	2[4]	2[4]	2[4]	2[4]	2[4]
Temperature rise range (ºF)	20-50	35-65	15-45	30-60	10-40	25-55	20-50	35-65	10-40	25-55
Gas limit setting (ºF)	165	165	165	165	215	195	195	160	195	160
Gas piping connection (in.)	3/4	3/4	3/4	3/4	3/4	3/4	3/4	3/4	3/4	3/4
Dimensions (inches)										
Length	89		89		89		89		119-7/16	
Width	59		59		59		59		59	
Height	42		42		50-3/4		50-3/4		50-3/4	
Operating weight (lbs.)	957		965		1200		1200		1465	
Compressors[5]										
Type	Scroll		Scroll		Scroll		Scroll		Scroll	
Quantity	2		2		2		2		2	
Unit capacity steps (%)	50 / 100		50 / 100		50 / 100		50 / 100		50 / 100	
Condenser coil data										
Face area (sq. ft)	23.8		23.8		29.0		29.0		47.5	
Rows	2 / 1		1		2		1		2	
Fins per inch	20		23		20		23		15	
Tube diameter (in.)	3/8		-		3/8		-		3/8	
Tube diameter (in.)/MM	-		1/25		-		1/25		-	
Circuitry type	Split-face		2-pass Microchannel		Split-face		2-pass Microchannel		Split-face	
Evaporator coil data										
Face area (sq. ft)	10.6		10.6		13.2		13.2		13.2	
Rows	3		3		4		4		4	
Fins per inch	15		15		15		15		15	
Tube diameter	3/8		3/8		3/8		3/8		3/8	
Circuitry type	Split-face		Split-face		Split-face		Split-face		Split-face	
Refrigerant control	TXV		TXV		TXV		TXV		TXV	

Table 11: ZR078-150 physical data (continued)

Component	Models									
	ZR078		ZR090		ZR102		ZR120		ZR150	
Nominal tonnage	**6.5**		**7.5**		**8.5**		**10**		**12.5**	
Reheat coil data										
Face area (sq. ft)	6.66		6.66		10		10		10	
Rows	2		2		2		2		2	
Fins per inch	13		13		13		13		13	
Tube diameter (in.)	3/8		3/8		3/8		3/8		3/8	
Condenser fan data										
Quantity of fans	2		2		2		2		4	
Fan diameter (inches)	24		24		24		24		24	
Type	Prop		Prop		Prop		Prop		Prop	
Drive type	Direct		Direct		Direct		Direct		Direct	
Quantity of motors	2		2		2		2		4	
Motor HP each	1/3		1/3		1/3		3/4		1/3	
No. of speeds	1		1		1		1		1	
RPM	850		850		850		1110		850	
Total CFM	6800		6800		6800		9500		14000	
Belt drive evap. fan data										
Quantity	1		1		1		1		1	
Fan size (inches)	12 x 12		12 x 12		15 x 15		15 x 15		15 x 15	
Type	Centrifugal		Centrifugal		Centrifugal		Centrifugal		Centrifugal	
Motor sheave	1VM50	1VM50	1VM50	1VM50	1VM50	1VM50	1VM50	1VM50	1VM50	1VP56
Blower sheave	AK74	AK64	AK74	AK61	AK89	AK74	AK84	AK74	AK74	BK77
Belt	A49	A49	A49	A49	A56	A54	A56	A54	A54	BX55
Motor HP each	1-1/2	2	1-1/2	3	2	3	2	3	3	5
RPM	1725	1725	1725	1725	1725	1725	1725	1725	1725	1725
Frame size	56	56	56	56	56	56	56	56	56	184T
Filters										
Quantity - size	4 - (24 x 16 x 2)[6,7]		4 - (24 x 16 x 2)[6,7]		4 - (24 x 20 x 2)[6,7]		4 - (24 x 20 x 2)[6,7]		4 - (24 x 20 x 2)[6,7]	
	4 - (24 x 16 x 4)[8]		4 - (24 x 16 x 4)[8]		4 - (24 x 20 x 4)[8]		4 - (24 x 20 x 4)[8]		4 - (24 x 20 x 4)[8]	

1. Cooling only unit or cooling unit with electric heat
2. Cooling unit with gas heat
3. Does not meet DOE 2018 minimum efficiency requirements
4. First stage 60% of second stage
5. ZR090, ZR102, ZR120, ZR150, have crankcase heaters standard.
6. 2 in. throwaway, standard, MERV (Minimum Efficiency Reporting Value) 3.
7. 2 in. pleated, optional, MERV 8.
8. 4 in. pleated, optional, MERV 13.

Optional electric heat

The factory-installed heaters are wired for single point power supply. You only need to bring the power supply into the single point terminal block.

These CSA approved heaters are located within the central compartment of the unit with the heater elements extending in to the supply air chamber.

Fuses are supplied, where required, by the factory. Some kW sizes require fuses and others do not. See Table 12 for minimum CFM limitations. See Table 10 for electrical data.

Table 12: Electric heat minimum supply air

Size (tons)	Model	Voltage	Minimum supply air (CFM)				
			Heater kW				
			9	18	24	36	54
078 (6.5)	ZR	208/230-3-60	1950	1950	1950	1950	-
		460-3-60	1950	1950	1950	1950	-
		600-3-60	1950	1950	1950	1950	-
090 (7.5)	ZR	208/230-3-60	2250	2250	2250	2250	-
		460-3-60	2250	2250	2250	2250	-
		600-3-60	2250	2250	2250	2250	-
102 (8.5)	ZR	208/230-3-60	2550	2550	2550	2550	-
		460-3-60	2550	2550	2550	2550	-
		600-3-60	2550	2550	2550	2550	-
120 (10)	ZR	208/230-3-60	-	3000	3000	3000	3500
		460-3-60	-	3000	3000	3000	3000
		600-3-60	-	3000	3000	3000	3500
150 (12.5)	ZR	208/230-3-60	-	3750	3750	3750	4000
		460-3-60	-	3750	3750	3750	3750
		600-3-60	-	3750	3750	3750	3750

Optional gas heat

The optional gas-fired heaters have aluminized-steel or optional stainless steel, tubular heat exchangers with spark ignition.

Table 13: Gas application data

Unit		Input (MBH)	Output (MBH)	Temp. rise (°F)
Size	Opt.			
078	N12	120	96	20-50
	N18	180	144	35-65
090	N12	120	96	15-45
	N18	180	144	30-60
102	N12	120	96	10-40
	N18	180	144	25-55
120	N18	180	144	20-50
	N24	240	192	35-65
150	N18	180	144	10-40
	N24	240	192	25-55

Gas piping

Proper sizing of gas piping depends on the cubic feet per hour of gas flow required, specific gravity of the gas, and the length of run.

Follow the “National Fuel Gas Code” Z223.1 (in U.S.A.) or the current Gas Installation Codes CSA-B149.1 (in Canada) in all cases unless they are superseded by local codes or gas utility requirements.

See Table 14, *Gas pipe sizing - capacity of pipe,* on page 31. The heating value of the gas may vary by locality. You must check the value with the local gas utility.

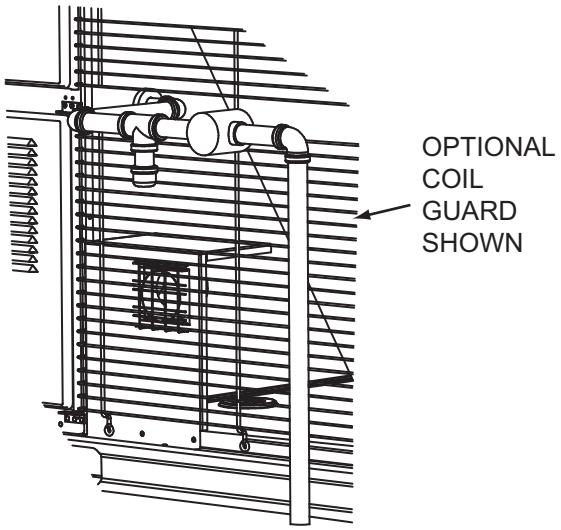

Figure 25: Side entry gas piping

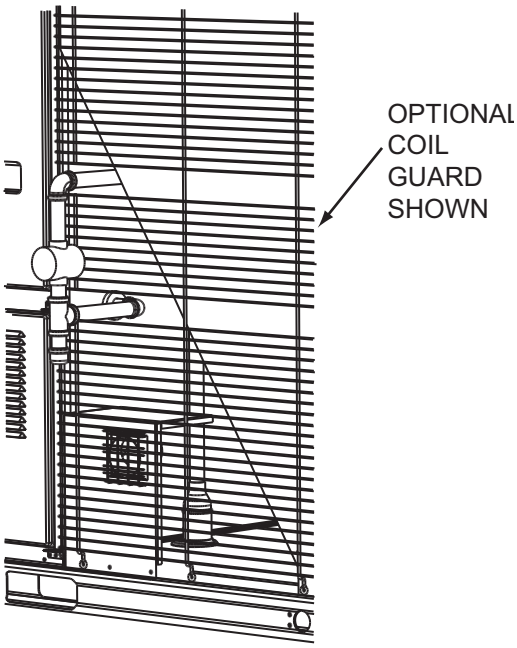

Figure 26: Bottom entry gas piping

Table 14: Gas pipe sizing - capacity of pipe

Length of pipe (ft.)	Nominal iron pipe size		
	3/4 in.	1 in.	1-1/4 in.
10	278	520	1050
20	190	350	730
30	152	285	590
40	130	245	500
50	115	215	440
60	105	195	400
70	96	180	370
80	90	170	350
90	84	160	320
100	79	150	305

NOTE: Maximum capacity of pipe in cubic feet of gas per hour based upon a pressure drop of 0.3 inch W.C. and 0.6 specific gravity gas.

NOTE: There may be a local gas utility requirement specifying a minimum diameter for gas piping. All units require a 3/4 inch pipe connection at the entrance fitting. The line must not be sized smaller than the entrance fitting size.

Table 15: Gas heat minimum supply air

Size (tons)	Model	Heat size	Supply air (CFM)			
			Cooling		Heating	
			Minimum	Maximum	Minimum	Maximum
078 (6.5)	ZR	N12	1950	3250	1950	3250
		N18	1950	3250	1950	3250
090 (7.5)	ZR	N12	2250	3750	2250	3750
		N18	2250	3750	2250	3750
102 (8.5)	ZR	N12	2550	4250	2550	4250
		N18	2550	4250	2550	4250
120 (10)	ZR	N18	3000	5000	3000	5000
		N24	3000	5000	3000	5000
150 (12.5)	ZR	N18	3750	6250	3750	6250
		N24	3750	6250	3750	6250

Gas connection

Route the gas supply line within the space and roof curb with the exit through the unit's basepan. See Figures 8 and 9 for the gas piping inlet location. Typical supply piping arrangements are shown in Figures 25 and 26. All pipe nipples, fittings, and the gas cock are field supplied or may be purchased in the Ducted Systems accessory kit #1GP0405.

Apply the following gas piping recommendations.

- You must install a drip leg and a ground joint union in the gas piping.
- When required by local codes, install a manual shut-off valve outside of the unit.
- Use wrought iron or steel pipe for all gas lines. Apply pipe dope sparingly to male threads only.

⚠WARNING

Natural gas may contain some propane. Propane is an excellent solvent and will quickly dissolve white lead and most standard commercial compounds. A special pipe dope must be used when assembling wrought iron or steel pipe. Shellac based compounds such as Gaskolac or Stalastic, and compounds such as Rectorseal #5, Clydes's or John Crane may be used.

- Clean all piping of dirt and scale. Hammer on the outside of the pipe and blow out loose particles. Before initial start-up, make sure that all gas lines external to the unit are purged of air.
- The gas supply must be a separate line and installed in accordance with all safety codes as prescribed under Limitations.

- You must install a 1/8-inch NPT plugged tapping, accessible for test gage connection, immediately upstream of the gas supply connection to the unit.
- After the gas connections are complete, open the main shut-off valve admitting *normal gas pressure* to the mains. *Check all joints for leaks with soap solution or other material suitable for the purpose.* **Never use a flame.**

⚠WARNING

Fire or explosion hazard

Failure to follow the safety warning exactly could result in serious injury, death, or property damage.

Never test for gas leaks with an open flame. Use a commercially available soap solution made specifically for the detection of leaks to check all connections. A fire or explosion may result causing property damage, personal injury, or loss of life.

⚠ CAUTION

The furnace and its individual shut-off valve must be disconnected from the gas supply piping system during any pressure testing at pressures in excess of 1/2 PSIG.

Pressures greater than 1/2 PSIG will cause gas valve damage resulting in a hazardous condition. If it is subjected to a pressure greater than 1/2 PSIG, the gas valve must be replaced.

The furnace must be isolated from the gas supply piping system by closing its individual manual shut-off valve during any pressure testing of the gas supply piping system at test pressures equal to or less than 1/2 PSIG.

⚠WARNING

Threaded joints must be coated with a sealing compound that is resistant to the action of liquefied petroleum gases. **Do not use Teflon tape.**

LP units, tanks, and piping

All gas heat units are shipped from the factory equipped for natural gas use only. The unit may be converted in the field for use with LP gas with accessory kit model 1NP0442.

All LP gas equipment must conform to the safety standards of the National Fire Protection Association.

For satisfactory operation, LP gas pressure must be 10.5 inch W.C. at the unit under full load. Maintaining proper gas pressure depends on three main factors:

- The vaporization rate which depends on the temperature of the liquid and the wetted surface area of the containers.
- The proper pressure regulation. Two-stage regulation is recommended.
- The pressure drop in the lines between regulators and between the second stage regulator and the appliance. The pipe size required depends on the length of the pipe run and the total load of all appliances.

Complete information regarding tank sizing for vaporization, recommended regulator settings, and pipe sizing is available from most regulator manufacturers and LP gas suppliers.

⚠WARNING

LP gas is an excellent solvent and will quickly dissolve white lead and most standard commercial compounds. A special pipe dope must be used when assembling wrought iron or steel pipe for LP. Shellac base compounds such as Gaskolac or Stalastic, and compounds such as Rectorseal #5, Clyde's, or John Crane may be used.

Check all connections for leaks when piping is completed using a soap solution. **Never use a flame.**

⚠WARNING

Fire or explosion hazard

Failure to follow the safety warning exactly could result in serious injury, death, or property damage.

Never test for gas leaks with an open flame. Use a commercially available soap solution made specifically for the detection of leaks to check all connections. A fire or explosion may result causing property damage, personal injury, or loss of life.

Vent and combustion air

Venting slots in the heating compartment access panel remove the need for a combustion air hood. The gas heat flue exhaust is routed through factory installed exhaust piping with screen. If necessary, a flue exhaust extension may be installed at the point of installation.

Options and accessories

Electric heat

Electric heaters are available as factory-installed options or field-installed accessories. Refer to electric heat instructions for installation. These heaters mount in the heat compartment with the heating elements extending into the supply air chamber. All electric heaters are fused and intended for use with single point power supply.

Motorized outdoor damper

The motorized outdoor damper can be a factory-installed option or a field-installed accessory. If factory installed, refer to the instructions included with the outdoor air hood to complete the assembly. Field-installed motorized outdoor damper accessories include complete instructions for installation.

Economizer

The economizer can be a factory-installed option or a field-installed accessory. If factory installed, refer to the instructions included with the economizer to complete the assembly. Field-installed economizer accessories include complete instructions for installation.

There are two economizer options:

1. Down flow, end return horizontal applications that include a fresh air hood and exhaust hood with barometric relief.
2. Horizontal flow application (field-installed kit only) that requires the purchase of a barometric relief hood.

Note: For the down flow, end return horizontal application, you must keep the two side panels for the economizer hood tops (See Figure 20).

Power exhaust

The power exhaust can be a factory installed-option or a field-installed accessory. If factory installed, refer to the instructions included with the power exhaust to complete the assembly. Field-installed power exhaust accessories include complete instructions for installation.

The power exhaust factory-installed option is for down flow application only.

There are two field-installed power exhaust accessories:

1. Down flow application.
2. Horizontal flow application that requires the purchase of a barometric relief hood.

Rain hood

For factory-installed options, all of the hood components, including the filters, the gasketing, and the hardware for assembling, are packaged and located between the condenser coil section and the main unit cabinet. For field-installed accessories, all parts necessary for the installation come in the accessory kit.

Economizer sequences

Several functions can drive the economizer, including: minimum position, free cooling, economizer loading, and minimum outdoor air supply.

Economizer minimum position

The economizer minimum position is set during occupied mode when outside air is not suitable for free cooling. The position of the damper is set proportionally between the Economizer Minimum Position and the Economizer Minimum Position Low Speed Fan setpoints, in relationship to the VFD output percentage. On a constant volume single speed supply fan system both setpoints should be set to the same value

Free cooling

Four types of free cooling options are available: dry bulb changeover, single enthalpy, dual enthalpy changeover, and Auto.

Dry bulb changeover

For dry bulb economizer operation, the outside air is suitable for free cooling if the outside air temperature is 1°F below the Economizer OAT Enable setpoint **and** 1°F below the Return Air Temperature.

Free cooling is no longer available if the outside air temperature rises above **either** the Economizer OAT Enable setpoint **or** the return air temperature.

Single enthalpy changeover

For single enthalpy economizer operation, the outside air is suitable for free cooling if the outside air enthalpy is at least 1 BTU/lb below the Economizer Outside Air Enthalpy setpoint **and** the outside air temperature is no greater than the RAT plus 9°F.

If the outside air temperature rises above the RAT plus 10°F, free cooling is no longer available. The outside air temperature must drop to no greater than RAT plus 9°F to enter free cooling again.

Free cooling is no longer available if the outside air enthalpy rises above the Economizer Outside Air Enthalpy setpoint.

Dual enthalpy changeover

For dual enthalpy economizer operation, the outside air enthalpy must be lower than the return air enthalpy by 1 btu/lb AND the outside air temperature is no greater than the RAT plus 9°F.

Auto

The control determines the type of free cooling changeover based on which sensors are present and reliable. Conditions include:

- Return and outside air dry bulb = dry bulb changeover
- Return and outside air dry bulb and outside air humidity = single enthalpy
- Return and outside air dry bulb and return and outside air humidity = dual enthalpy
- If either the return or outside air dry bulb sensors are unreliable, free cooling is not available

Free cooling operation

When the control determines that the outside air is suitable, the first stage of cooling will always be free cooling.

Thermostat

In free cooling, with a thermostat input to Y1, the dampers modulate to control the supply air temperature to the Economizer setpoint +/- 1°F (default 55°F).

If the thermostat provides an input to Y2 **and** the parameter Compressors Off in Free Cooling is turned OFF a compressor output energizes. The economizer dampers continue to modulate to control the supply air temperature to the Economizer setpoint.

If the supply air temperature cannot be maintained within 5°F of the economizer setpoint, the first stage compressor (C1) will be turned on. Second stage compressor (C2) will be added as needed to keep the supply air temperature within the 5°F of the economizer setpoint.

Sensor

In free cooling, with a demand from the zone/return sensor for the first stage of cooling, the dampers modulate to control the supply air temperature to the Economizer setpoint +/- 1°F.

If the economizer output is at 100% **and** the SAT is greater than the Economizer setpoint + 1°F, the control starts a 12-minute timer to energize a compressor output.

If at any time the economizer output drops below 100% the timer stops and resets when the economizer output returns to 100%.

Once a compressor output is turned ON, the economizer dampers continue to modulate to control the supply air temperature to the Economizer setpoint.

At no time will a compressor output be turned ON if the economizer output is less than 100%, even if the differential between zone (or return) temperature and the current cooling setpoint is great enough to demand more than one stage of cooling.

If the economizer output goes to minimum position **and** the SAT is less than Economizer setpoint -1°F, the control starts a 12-minute timer to de-energize a compressor output.

If at any time the economizer output goes above the minimum position the timer stops and resets when the economizer output returns to minimum position.

If the demand for cooling from the space/return is satisfied, the economizer output will modulate to minimum position and the compressor outputs will be de-energized as long as their minimum run timers have expired.

Power exhaust

Setpoints

- Economizer enable ON
- Power exhaust enable ON
- Modulating power exhaust OFF
- Exhaust VFD installed OFF
- Building pressure sensor enabled OFF
- Econo damper position for exh fan ON Percent
- Econo damper position for exh fan OFF Percent

Inputs

No inputs are present for non-modulating power exhaust.

Outputs

- 2-10 VDC from ECON on the economizer expansion module
- 24 VAC from EX-FAN to energize the exhaust fan on the economizer expansion module

Operation

Operation details include:

a. Compares the economizer output to the economizer damper position for exhaust fan on and off

b. Energizes the exhaust fan when the economizer output is above the economizer damper position for exhaust fan on

c. De-energizes the exhaust fan when the economizer output is below the economizer damper position for exhaust fan off

Smart Equipment™ economizer board

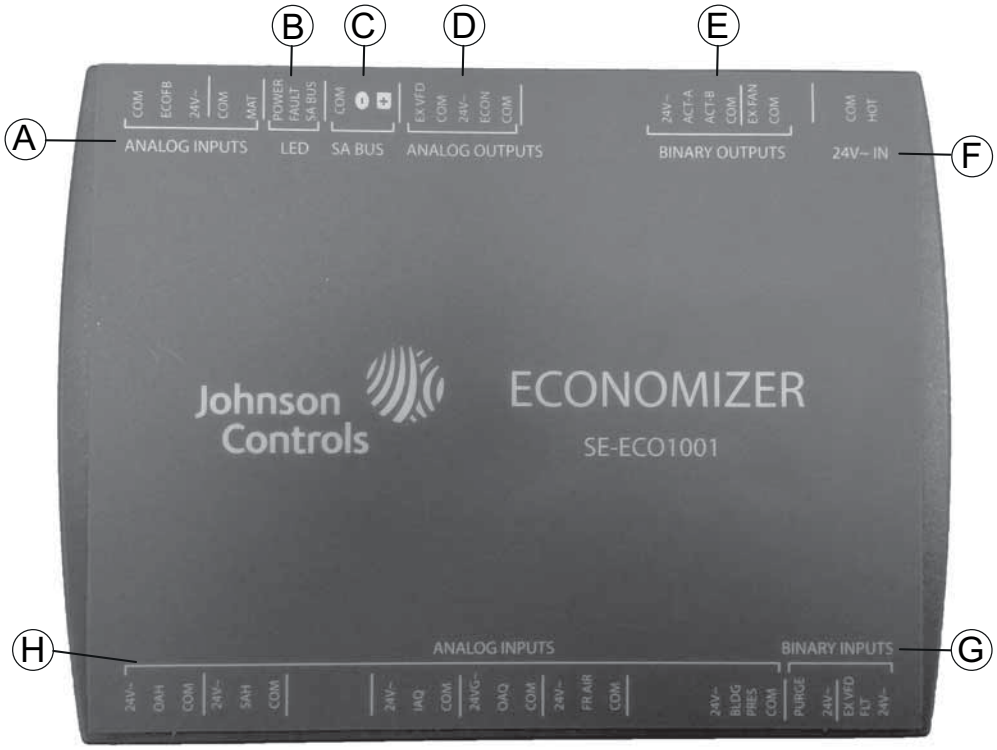

Figure 27: SE-ECO1001-0 economizer controller

The following tables describe the details of the economizer board. See Figure 27 for connection locations.

Smart Equipment™ economizer board - analog inputs

Location	Board label	Cover label	Description	Function and comments
A	C	COM	24 VAC common/0-10 VDC negative for economizer actuator position feedback	Connects through circuit trace to 24V~ IN pin COM
	IN2	ECOFB	0-10 VDC positive input from economizer actuator position feedback	The EconDampPos parameter reports input status (0-100%). Used to meet California Title 24 requirements for economizer actuator position feedback.
	R	24V~	24 VAC hot supplied for economizer actuator position feedback	Connects through circuit trace to 24V~ IN pin **HOT**
	C	COM	Mixed air temperature sensor input from 10KΩ @ 77°F, Type III negative temperature coefficient thermistor	The MAT parameter reports input status (°F/°C), 3.65 VDC reading MAT (+) to COM (−) with open circuit. Read-only use in current control revision.
	IN1	MAT		
H	R	24V~	24 VAC hot supplied for the outdoor air humidity sensor	Connects through circuit trace to 24V~ IN pin HOT
	IN3	OAH	0-10 VDC positive input from the Outdoor Air Humidity sensor	OAH parameter reports input status (0-100%H). Used in outdoor air enthalpy calculation for dual enthalpy economizer free cooling changeover.
	C	COM	24 VAC common/0-10 VDC negative for the outdoor air humidity sensor	Connects through circuit trace to 24V~ IN pin COM
	R	24V~	24 VAC hot supplied for the supply air humidity sensor	Connects through circuit trace to 24V~ IN pin HOT
	IN4	SAH	0-10 VDC positive input from the Supply Air Humidity sensor	SAH parameter reports input status (0-100%H). Unused in current control revision.

Smart Equipment™ economizer board - analog inputs (continued)

Location	Board label	Cover label	Description	Function and comments
H	**C**	COM	24 VAC common/0-10 VDC negative for the supply air humidity sensor	Connects through circuit trace to 24V~ IN pin COM
	R	24V~	24 VAC hot supplied for the indoor air quality sensor	Connects through circuit trace to 24V~ IN pin HOT
	IN5	IAQ	0-10 VDC positive input from the Indoor Air Quality sensor	IAQRange parameter sets the CO2 parts per million measured by the indoor air quality sensor when it outputs 10 VDC; IAQ parameter reports input status (0-5000ppm). Used for demand ventilation functions if the NetIAQ parameter indicates ?Unrel.
	C	COM	24 VAC common/0-10 VDC negative for the indoor air quality sensor	Connects through circuit trace to 24V~ IN pin COM
	R	24V~	24 VAC hot supplied for the outdoor air quality sensor	Connects through circuit trace to 24V~ IN pin HOT
	IN6	OAQ	0-10 VDC positive input from the Outdoor Air Quality sensor	OAQRange parameter sets the CO2 parts per million measured by the outdoor air quality sensor when it outputs 10 VDC; OAQ parameter reports input status (0-5000ppm). Used for demand ventilation function when DVent-Mode selection is Diff between IAQ and OAQ and the NetOAQ parameter indicates ?Unrel.
	C	COM	24 VAC common/0-10 VDC negative for the outdoor air quality sensor	Connects through circuit trace to 24V~ IN pin COM
	R	24V~	24 VAC hot supplied for the air monitoring station sensor	Connects through circuit trace to 24V~ IN pin HOT
	IN7	FR AIR	0-10 VDC positive input from the air monitoring station sensor	MOA-Range parameter sets the cubic feet per minute/liters per second measured by the air monitoring station sensor when it outputs 10 VDC; Fr Air parameter reports input status (0-50000CFM/23595lps). Used for economizer minimum position reset in speed-controlled indoor blower applications.
	C	COM	24 VAC common/0-10 VDC negative for the air monitoring station sensor	Connects through circuit trace to 24V~ IN pin COM
	R	24V~	24 VAC hot supplied for the building pressure sensor	Connects through circuit trace to 24V~ IN pin HOT
	IN8	BLDG PRES	0-5 VDC positive input from the Building Pressure sensor	BldgPres parameter reports input status (-.250-.250”/w/-.062-.062kPa). Used for modulating power exhaust functions when ExFType selection is Modulating Damper or Variable Frequency Fan.
	C	COM	24 VAC common/0-5 VDC negative for the building pressure sensor	Connects through circuit trace to 24V~ IN pin COM

Smart Equipment™ economizer board - LED details

Location	Board label	Cover label	Description	Function and comments
B	**POWER**	POWER	Green UCB power indicator	Lit indicates 24 VAC is present at 24V~ IN **COM** and **HOT** pins
	FAULT	FAULT	Red networking error and firmware error indicator	1/10th second on/off flashing indicates a networking error (polarity, addressing, etc.) or a firmware error (likely correctable with re-loading from USB flash drive)
	SA BUS	SA BUS	Green UCB SA bus communication transmission indicator	Lit/flickering indicates UCB-to-economizer board SA bus communication is currently active, off indicates the economizer board is awaiting SA bus communication

Smart Equipment™ economizer board - SA bus details

Location	Board label	Cover label	Description	Function and comments
C[1]	C	COM	Common for SA BUS power and communication circuits	EconCtrlr parameter reports UCB-to-economizer board SA bus communication status. Negative of the SA BUS communication circuit to the UCB. Through the unit wiring harness, may continue on to the 4-stage board and/or fault detection & diagnostics board
	–	–	Communication for SA BUS devices	EconCtrlr parameter reports UCB-to-economizer board SA BUS communication status. Positive of the VDC (typically, a fluctuating 1.5 to 3.5 volts reading to C; at least 0.25 volts lower than +) SA BUS communication circuit to the UCB. Through the unit wiring harness, may continue on to the 4-stage board and/or fault detection & diagnostics board
	+	+	Communication for SA BUS devices	EconCtrlr parameter reports UCB-to-economizer board SA BUS communication status. Positive of the VDC (typically, a fluctuating 1.5 to 3.5 volts reading to C; at least 0.25 volts higher than –) SA BUS communication circuit to the UCB. Through the unit wiring harness, may continue on to the 4-stage board and/or fault detection & diagnostics board

1. When wiring the unit and other devices using the SA Bus and FC Bus, see Table 32.

Smart Equipment™ economizer board - analog outputs

Location	Board label	Cover label	Description	Function and comments
D	J4	EX VFD	2-10 VDC positive output for the modulating power Exhaust fan Variable Frequency Drive/ discharge damper modulating power exhaust actuator	ExFanVFD parameter reports output status (0-100%) when ExFType selection is Variable Frequency Fan; EAD-O parameter reports output status (0-100%) when ExFType selection is Modulating Damper. Used to ramp the power exhaust fan VFD/ position the discharge damper actuator.
		COM	24 VAC common/0-10 VDC negative for the power exhaust variable frequency drive/ discharge damper modulating power exhaust actuator	Connects through circuit trace to 24V~ IN pin COM
		24V~	24 VAC hot supplied for the discharge damper modulating power exhaust actuator and economizer actuator	Connects through circuit trace to 24V~ IN pin HOT
		ECON	2-10 VDC output for the Economizer actuator	Econ parameter reports output status (0-100%). Used to position the economizer actuator for minimum position, free cooling, demand ventilation, cooling economizer loading and purge functions
		COM	24 VAC common/0-10 VDC negative for economizer actuator	Connects through circuit trace to 24V~ IN pin COM

Smart Equipment™ economizer board - binary outputs

Location	Board label	Cover label	Description	Function and comments
E	J3	24V~	24 VAC hot supplied for an incremental (floating control) economizer actuator	Connects through circuit trace to 24V~ IN pin HOT
		ACT-A	24 VAC hot outputs to position an incremental (floating control) economizer actuator	Unused in current control revision
		ACT-B	24 VAC return	Unused in current control revision
		COM	24 VAC common for an incremental (floating control) economizer actuator	Connects through circuit trace to 24V~ IN pin COM
		EX-FAN	24 VAC hot output to energize power exhaust fan contactor coil/VFD enable relay coil	ExFan parameter reports output status (Off-On) when ExFType selection is Non-Modulating, Modulating Damper or Variable Frequency Fan. Used to turn on/enable the power exhaust fan motor.
		COM	24 VAC common/0-10 VDC negative for economizer actuator	Connects through circuit trace to 24V~ IN pin COM

Smart Equipment™ economizer board - 24V~ IN connections

Location	Board label	Cover label	Description	Function and comments
F	C	COM	24 VAC transformer Common referenced to cabinet ground	24 VAC common connection to power the economizer board. Connects through circuit traces to C/COM terminals and pins distributed on the economizer board.
	R	HOT	24 VAC transformer HOT	24 VAC hot connection to power the economizer board. Connects through circuit traces to R/24V~ terminals and pins distributed on the economizer board.

Smart Equipment™ economizer board - binary inputs

Location	Board label	Cover label	Description	Function and comments
G	IN9	PURGE	24 VAC hot input from the PURGE dry contact	Purge parameter reports input status (False with 0 VAC input-True with 24 VAC input). When Purge status is True, heating and cooling operation is prevented, the indoor blower and power exhaust fan operate, the economizer actuator is positioned to 100%.
		24V~	24 VAC hot supplied for the purge dry contact	Connects through circuit trace to 24V~ IN pin HOT
	IN10	EX VFD FLT	24 VAC hot input from the power Exhaust Variable Frequency Drive Fault contact	ExFanVFDFlt parameter reports input status (Normal with 0 VAC input-Alarm with 24 VAC input) when ExFType selection is Variable Frequency Fan. When ExFanVFDFlt status is Alarm, EX-FAN fan output is prevented.
		24V~	24 VAC hot supplied for the power exhaust variable frequency drive fault contact	Connects through circuit trace to 24V~ IN pin HOT

Indoor air quality

Indoor air quality (IAQ) is regulated by an indoor sensor input. The IAQ sensor is connected to the economizer board through the IAQ analog input terminal and the associated COM and 24V~ inputs on the economizer board. Terminal IAQ accepts a 0 to +10 VDC signal with respect to the IAQ terminal. When the signal is below its setpoint, the actuator is allowed to modulate normally in accordance with the enthalpy and mixed air sensor inputs. When the IAQ signal exceeds its setpoint setting and there is no call for free cooling, the actuator is proportionately modulated from the 0 to 10 VDC signal, with 0 VDC corresponding to full closed and 10 VDC corresponding to full open. When there is no call for free cooling, the damper position is limited by the IAQ max. damper position setting. When the signal exceeds its setpoint (demand control ventilation setpoint) setting and there is a call for free cooling, the actuator modulates from the minimum position to the full open position based on the highest call from either the mixed air sensor input or the IAQ voltage input.

- Optional CO^2 space sensor kit - part no. 2AQ04700524
- Optional CO^2 sensor kit - part no. 2AQ04700624

Phasing

ZR078-150 units are properly phased at the factory. Check for proper compressor rotation. If the blower or compressors rotate in the wrong direction at start-up, the electrical connection to the unit is misphased. Change the phasing of the field line connection at the factory or field supplied disconnect to obtain proper rotation. Scroll compressors operate in only one direction. The scroll is misphased if it is drawing low amperage, has similar suction and discharge pressures, or it produces a high noise level.

⚠ CAUTION

Scroll compressors require proper rotation to operate correctly. Units are properly phased at the factory. Do not change the internal wiring to make the blower condenser fans, or compressor rotate correctly.

Blower rotation

Check for proper supply air blower rotation. If the blower is rotating backwards, the line voltage at the unit point of power connection is misphased. See *Phasing on page 45*.

Table 16: Supply air limitations

Unit size (ton)	Minimum	Maximum
078 (6.5)	1950	3250
090 (7.5)	2250	3750
102 (8.5)	2550	4250
120 (10)	3000	5000
150 (12.5)	3750	6250

Adjusting the belt tension

To adjust the belt tension complete the following steps.

1. Loosen the six belts nuts at the top and bottom. See Figure 28

Note: Never loosen the static nut at the top of the adjustment bolt.

2. Turn the adjustment bolt.
3. Use a belt tension checker to apply a perpendicular force to one belt at the midpoint of the span shown in Figure 28. A deflection distance of 4 mm (5/32 in.) is obtained.
4. To determine the deflection distance from normal position, use a straight edge from sheave to sheave as a reference line.

   The recommended deflection force is as follows:

   Tension new belts at the max. deflection force recommended for the belt section.

5. Re-tighten the belt nuts.

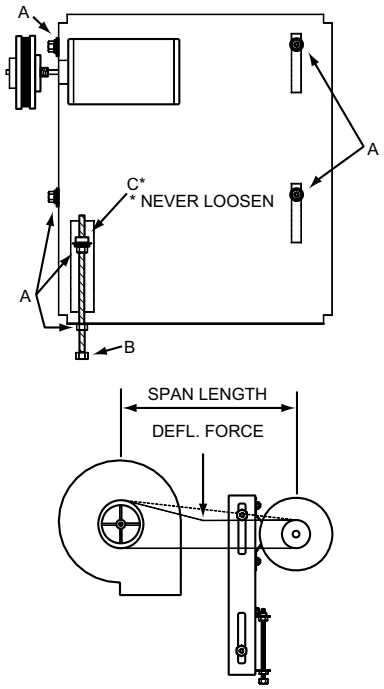

Item	Component
A	Belt nuts
B	Adjustment bolt
C	Static nut

Figure 28: Belt adjustment

⚠ CAUTION

Check the belt tension at least two times during the first 24 hours of operation. Any retensioning must fall between the min. and max. deflection force values.

CFM static pressure and power-altitude and temperature corrections

Use the information below to assist in the application of the product at altitudes at or exceeding 1000 feet above sea level.

The air flow rates listed in the standard blower performance tables are based on standard air at sea level. As the altitude or temperature increases, the density of air decreases. In order to use the indoor blower tables for high altitude applications, certain corrections are necessary.

A centrifugal fan is a constant volume device. This means that, if the RPM remains constant, the CFM delivered is the same regardless of the density of the air. However, since the air at high altitude is less dense, less static pressure is generated and less power is required than a similar application at sea level. Air density correction factors are shown in Table 17 and Figure 29.

Table 17: Altitude/temperature correction factors

Air temp.	Altitude (Ft.)										
	0	1000	2000	3000	4000	5000	6000	7000	8000	9000	10000
40	1.060	1.022	0.986	0.950	0.916	0.882	0.849	0.818	0.788	0.758	0.729
50	1.039	1.002	0.966	0.931	0.898	0.864	0.832	0.802	0.772	0.743	0.715
60	1.019	0.982	0.948	0.913	0.880	0.848	0.816	0.787	0.757	0.729	0.701
70	1.000	0.964	0.930	0.896	0.864	0.832	0.801	0.772	0.743	0.715	0.688
80	0.982	0.947	0.913	0.880	0.848	0.817	0.787	0.758	0.730	0.702	0.676
90	0.964	0.929	0.897	0.864	0.833	0.802	0.772	0.744	0.716	0.689	0.663
100	0.946	0.912	0.880	0.848	0.817	0.787	0.758	0.730	0.703	0.676	0.651

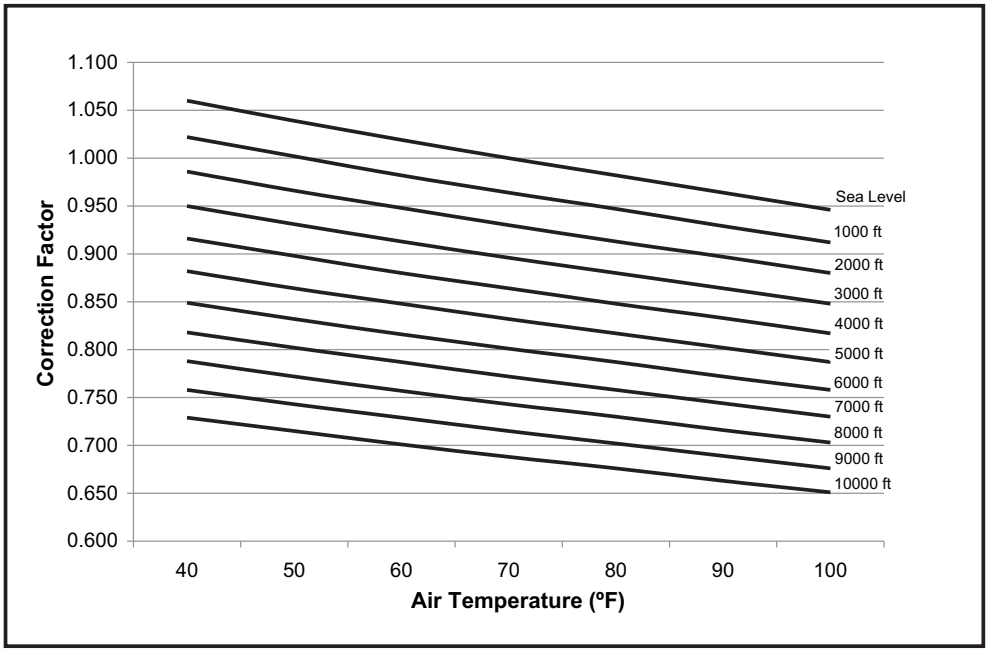

Figure 29: Altitude/temperature correction factors

Use the examples below to assist in determining the airflow performance of the product at altitude.

Example 1: What are the corrected CFM, static pressure, and BHP at an elevation of 5,000 ft. if the blower performance data is 6,000 CFM, 1.5 IWC and 4.0 BHP?

Solution: At an elevation of 5,000 ft. the indoor blower will still deliver 6,000 CFM if the RPM is unchanged. However, Table 18 must be used to determine the static pressure and BHP. Since no temperature data is given, we will assume an air temperature of 70°F. Table 17 shows the correction factor to be 0.832.

Corrected static pressure = 1.5 x 0.832 = 1.248 IWC

Corrected BHP = 4.0 x 0.832 = 3.328

Example 2: A system, located at 5,000 feet of elevation, is to deliver 6,000 CFM at a static pressure of 1.5 in. Use the unit blower tables to select the blower speed and the BHP requirement.

Solution: As in the example above, no temperature information is given so 70°F is assumed.

The 1.5 in. static pressure given is at an elevation of 5,000 ft. The first step is to convert this static pressure to equivalent sea level conditions.

Sea level static pressure = 1.5 / .832 = 1.80"

Enter the blower table at 6000 sCFM and static pressure of 1.8 in. The RPM listed will be the same RPM needed at 5,000 ft.

Suppose that the corresponding BHP listed in the table is 3.2. This value must be corrected for elevation.

BHP at 5,000 ft. = 3.2 x .832 = 2.66

Drive selection

1. Determine side or bottom supply duct application.
2. Determine the required airflow.
3. Calculate or measure the amount of external static pressure.
4. With the operating point determined from steps 1, 2, and 3, locate this point on the appropriate supply air blower performance table. Linear interpolation may be necessary.
5. Note the RPM and BHP from step 4 and locate the appropriate motor and/or drive.
6. Review the BHP compared to the motor options available. Select the appropriate motor and/or drive.
7. Review the RPM range for the motor options available. Select the appropriate drive if multiple drives are available for the chosen motor.
8. Determine the turns open to obtain the required operation point.

Example

1. 2600 CFM
2. 1.6 iwg
3. Using the supply air blower performance table below, the following data point was located: 1268 RPM & 1.95 BHP.
4. Using the RPM selection table below, Size X and Model Y is found.
5. 1.95 BHP exceeds the maximum continuous BHP rating of the 1.5 HP motor. The 2 HP motor is required.
6. 1268 RPM is within the range of the 2 HP drives.
7. Using the 2 HP motor and drive, .5 turns open will achieve 1268 RPM.

Example supply air blower performance

Air flow (CFM)	Available external static pressure - IWG																			
	0.2		0.4		0.6		0.8		1.0		1.2		1.4		1.6		1.8		2.0	
	RPM	BHP	RPM	BHP	RPM	BHP	RPM	BHP	RPM	BHP	RPM	BHP	RPM	BHP	RPM	BHP	RPM	BHP	RPM	BHP
	1.5 HP and field supplied drive								Standard 1.5 HP and drive						Alternate 2 HP and drive					
2200	804	0.50	866	0.71	925	0.90	982	1.06	1038	1.21	1092	1.35	1147	1.48	1203	1.61	1259	1.73	1317	1.87
2400	835	0.66	897	0.87	956	1.06	1013	1.22	1069	1.37	1124	1.51	1178	1.64	1234	1.77	1290	1.90	1348	2.03
2600	869	0.84	931	1.05	990	1.24	1047	1.40	1103	1.55	1158	1.69	1212	1.82	1268	1.95	1324	2.07	1382	2.21
2800	906	1.03	968	1.25	1027	1.43	1084	1.60	1139	1.75	1194	1.89	1249	2.02	1304	2.14	1361	2.27	-	-

Table X: RPM selection

Size (tons)	Model	HP	Max BHP	Motor sheave	Blower sheave	6 turns open	5 turns open	4 turns open	3 turns open	2 turns open	1 turn open	Fully closed
X	Y	1.5	1.73	1VM50	AK74	N/A	897	945	991	1035	1079	1126
		2	2.30	1VM50	AK64	N/A	1039	1094	1150	1207	1256	1308

Airflow performance

Table 18: Airflow performance - side duct application

ZR078 (6.5 ton) side duct

Air flow (CFM)	Available external static pressure - IWG[1]																			
	0.2		0.4		0.6		0.8		1.0		1.2		1.4		1.6		1.8		2.0	
	RPM	BHP	RPM	BHP	RPM	BHP	RPM	BHP	RPM	BHP	RPM	BHP	RPM	BHP	RPM	BHP	RPM	BHP	RPM	BHP
	1.5 HP and field supplied drive						Standard 1.5 HP and drive								High static 2 HP and drive					
1800	778	0.37	838	0.56	895	0.73	951	0.88	1005	1.01	1059	1.13	1112	1.25	1166	1.36	1221	1.47	1278	1.59
2000	803	0.50	864	0.69	921	0.85	977	1.00	1031	1.14	1085	1.26	1138	1.37	1192	1.49	1247	1.60	1304	1.72
2200	833	0.64	893	0.83	951	1.00	1006	1.14	1061	1.28	1114	1.40	1168	1.51	1221	1.63	1276	1.74	1333	1.86
2400	866	0.80	926	0.99	984	1.15	1039	1.30	1094	1.43	1147	1.56	1201	1.67	1254	1.78	1309	1.90	1366	2.02
2600	902	0.97	962	1.16	1020	1.33	1076	1.47	1130	1.61	1183	1.73	1237	1.85	1291	1.96	1346	2.07	1402	2.19
2800	941	1.16	1002	1.35	1059	1.52	1115	1.67	1169	1.80	1222	1.92	1276	2.04	1330	2.15	1385	2.26	-	-
3000	983	1.37	1043	1.56	1101	1.73	1157	1.88	1211	2.01	1264	2.13	1318	2.25	-	-	-	-	-	-
3200	1028	1.60	1088	1.79	1145	1.95	1201	2.10	1255	2.24	-	-	-	-	-	-	-	-	-	-
3400	1074	1.84	1134	2.03	1192	2.20	-	-	-	-	-	-	-	-	-	-	-	-	-	-
											2 HP and field supplied drive									

1. Blower performance includes gas heat exchangers and 2 in. filters. See the static resistance table for additional applications.
2. See the RPM selection table to determine the required motor sheave setting and to determine the maximum continuous BHP.
3. kW = BHP x 0.932.

ZR090 (7.5 ton) side duct

Air flow (CFM)	Available external static pressure - IWG[1]																			
	0.2		0.4		0.6		0.8		1.0		1.2		1.4		1.6		1.8		2.0	
	RPM	BHP	RPM	BHP	RPM	BHP	RPM	BHP	RPM	BHP	RPM	BHP	RPM	BHP	RPM	BHP	RPM	BHP	RPM	BHP
	1.5 HP and field supplied drive				Standard 1.5 HP and drive								High static 3 HP and drive							
2000	803	0.50	864	0.69	921	0.85	977	1.00	1031	1.14	1085	1.26	1138	1.37	1192	1.49	1247	1.60	1304	1.72
2200	833	0.64	893	0.83	951	1.00	1006	1.14	1061	1.28	1114	1.40	1168	1.51	1221	1.63	1276	1.74	1333	1.86
2400	866	0.80	926	0.99	984	1.15	1039	1.30	1094	1.43	1147	1.56	1201	1.67	1254	1.78	1309	1.90	1366	2.02
2600	902	0.97	962	1.16	1020	1.33	1076	1.47	1130	1.61	1183	1.73	1237	1.85	1291	1.96	1346	2.07	1402	2.19
2800	941	1.16	1002	1.35	1059	1.52	1115	1.67	1169	1.80	1222	1.92	1276	2.04	1330	2.15	1385	2.26	1442	2.38
3000	983	1.37	1043	1.56	1101	1.73	1157	1.88	1211	2.01	1264	2.13	1318	2.25	1372	2.36	1427	2.47	1483	2.59
3200	1028	1.60	1088	1.79	1145	1.95	1201	2.10	1255	2.24	1309	2.36	1362	2.47	1416	2.59	1471	2.70	1528	2.82
3400	1074	1.84	1134	2.03	1192	2.20	1248	2.35	1302	2.48	1355	2.60	1409	2.72	1463	2.83	1518	2.94	1574	3.06
3600	1123	2.10	1183	2.29	1241	2.46	1297	2.61	1351	2.74	1404	2.86	1458	2.98	1512	3.09	1567	3.21	1623	3.32
3800	1174	2.38	1234	2.57	1292	2.74	1348	2.88	1402	3.02	1455	3.14	1509	3.26	1562	3.37	-	-	-	-
									3 HP and field supplied drive											

1. Blower performance includes gas heat exchangers and 2 in. filters. See the static resistance table for additional applications.
2. See the RPM selection table to determine the required motor sheave setting and to determine the maximum continuous BHP.
3. kW = BHP x 0.932.

ZR102 (8.5 ton) side duct

Air flow (CFM)	Available external static pressure - IWG[1]																			
	0.2		0.4		0.6		0.8		1.0		1.2		1.4		1.6		1.8		2.0	
	RPM	BHP	RPM	BHP	RPM	BHP	RPM	BHP	RPM	BHP	RPM	BHP	RPM	BHP	RPM	BHP	RPM	BHP	RPM	BHP
	2 HP and field supplied drive		Standard 2 HP and drive										High static 3 HP and drive							
2200	684	0.48	735	0.67	783	0.84	829	1.01	874	1.17	918	1.32	960	1.48	1001	1.63	1041	1.78	1081	1.94
2400	695	0.58	745	0.76	793	0.94	840	1.11	885	1.27	928	1.42	970	1.57	1011	1.73	1052	1.88	1091	2.04
2600	706	0.67	756	0.86	805	1.04	851	1.20	896	1.36	939	1.52	981	1.67	1023	1.82	1063	1.98	1103	2.13
2800	719	0.78	769	0.96	817	1.14	863	1.31	908	1.47	952	1.62	994	1.78	1035	1.93	1075	2.08	1115	2.24
3000	732	0.89	782	1.08	831	1.25	877	1.42	922	1.58	965	1.74	1007	1.89	1049	2.04	1089	2.19	1128	2.35
3200	747	1.02	797	1.21	846	1.38	892	1.55	937	1.71	980	1.86	1023	2.02	1064	2.17	1104	2.32	1144	2.48
3400	764	1.16	814	1.35	862	1.53	909	1.69	954	1.85	997	2.01	1039	2.16	1080	2.31	1121	2.47	1160	2.62
3600	783	1.33	833	1.51	881	1.69	927	1.86	972	2.02	1016	2.17	1058	2.32	1099	2.48	1139	2.63	1179	2.79
3800	803	1.51	853	1.69	901	1.87	948	2.04	992	2.20	1036	2.35	1078	2.50	1119	2.66	1159	2.81	1199	2.97
4000	825	1.71	875	1.89	923	2.07	970	2.23	1014	2.39	1058	2.55	1100	2.70	1141	2.86	1181	3.01	1221	3.16
4200	849	1.92	899	2.11	947	2.29	993	2.45	1038	2.61	1082	2.77	1124	2.92	1165	3.07	1205	3.23	1245	3.38
													3 HP and field supplied drive							

1. Blower performance includes gas heat exchangers and 2 in. filters. See the static resistance table for additional applications.
2. See the RPM selection table to determine the required motor sheave setting and to determine the maximum continuous BHP.
3. kW = BHP x 0.932.

ZR120 (10 ton) side duct

Air flow (CFM)	Available external static pressure - IWG[1]																			
	0.2		0.4		0.6		0.8		1.0		1.2		1.4		1.6		1.8		2.0	
	RPM	BHP	RPM	BHP	RPM	BHP	RPM	BHP	RPM	BHP	RPM	BHP	RPM	BHP	RPM	BHP	RPM	BHP	RPM	BHP
	2 HP and field supplied drive				Standard 2 HP and drive								High static 3 HP and drive							
2600	706	0.67	756	0.86	805	1.04	851	1.20	896	1.36	939	1.52	981	1.67	1023	1.82	1063	1.98	1103	2.13
2800	719	0.78	769	0.96	817	1.14	863	1.31	908	1.47	952	1.62	994	1.78	1035	1.93	1075	2.08	1115	2.24
3000	732	0.89	782	1.08	831	1.25	877	1.42	922	1.58	965	1.74	1007	1.89	1049	2.04	1089	2.19	1128	2.35
3200	747	1.02	797	1.21	846	1.38	892	1.55	937	1.71	980	1.86	1023	2.02	1064	2.17	1104	2.32	1144	2.48
3400	764	1.16	814	1.35	862	1.53	909	1.69	954	1.85	997	2.01	1039	2.16	1080	2.31	1121	2.47	1160	2.62
3600	783	1.33	833	1.51	881	1.69	927	1.86	972	2.02	1016	2.17	1058	2.32	1099	2.48	1139	2.63	1179	2.79
3800	803	1.51	853	1.69	901	1.87	948	2.04	992	2.20	1036	2.35	1078	2.50	1119	2.66	1159	2.81	1199	2.97
4000	825	1.71	875	1.89	923	2.07	970	2.23	1014	2.39	1058	2.55	1100	2.70	1141	2.86	1181	3.01	1221	3.16
4200	849	1.92	899	2.11	947	2.29	993	2.45	1038	2.61	1082	2.77	1124	2.92	1165	3.07	1205	3.23	1245	3.38
4400	874	2.16	924	2.35	972	2.52	1019	2.69	1064	2.85	1107	3.01	1149	3.16	1190	3.31	-	-	-	-
4600	901	2.42	952	2.61	1000	2.78	1046	2.95	1091	3.11	1134	3.26	1177	3.42	-	-	-	-	-	-
4800	930	2.70	981	2.88	1029	3.06	1075	3.23	1120	3.39	-	-	-	-	-	-	-	-	-	-
5000	961	2.99	1011	3.18	1059	3.35	-	-	-	-	-	-	-	-	-	-	-	-	-	-
									3 HP and field supplied drive											

1. Blower performance includes gas heat exchangers and 2 in. filters. See the static resistance table for additional applications.
2. See the RPM selection table to determine the required motor sheave setting and to determine the maximum continuous BHP.
3. kW = BHP x 0.932.

ZR150 (12.5 ton) side duct

Air flow (CFM)	Available external static pressure - IWG[1]																			
	0.2		0.4		0.6		0.8		1.0		1.2		1.4		1.6		1.8		2.0	
	RPM	BHP	RPM	BHP	RPM	BHP	RPM	BHP	RPM	BHP	RPM	BHP	RPM	BHP	RPM	BHP	RPM	BHP	RPM	BHP
	3 HP and field supplied drive						Standard 3 HP and drive													
3200	747	1.02	797	1.21	846	1.38	892	1.55	937	1.71	980	1.86	1023	2.02	1064	2.17	1104	2.32	1144	2.48
3400	764	1.16	814	1.35	862	1.53	909	1.69	954	1.85	997	2.01	1039	2.16	1080	2.31	1121	2.47	1160	2.62
3600	783	1.33	833	1.51	881	1.69	927	1.86	972	2.02	1016	2.17	1058	2.32	1099	2.48	1139	2.63	1179	2.79
3800	803	1.51	853	1.69	901	1.87	948	2.04	992	2.20	1036	2.35	1078	2.50	1119	2.66	1159	2.81	1199	2.97
4000	825	1.71	875	1.89	923	2.07	970	2.23	1014	2.39	1058	2.55	1100	2.70	1141	2.86	1181	3.01	1221	3.16
4200	849	1.92	899	2.11	947	2.29	993	2.45	1038	2.61	1082	2.77	1124	2.92	1165	3.07	1205	3.23	1245	3.38
4400	874	2.16	924	2.35	972	2.52	1019	2.69	1064	2.85	1107	3.01	1149	3.16	1190	3.31	1231	3.47	1270	3.62
4600	901	2.42	952	2.61	1000	2.78	1046	2.95	1091	3.11	1134	3.26	1177	3.42	1218	3.57	1258	3.72	1298	3.88
4800	930	2.70	981	2.88	1029	3.06	1075	3.23	1120	3.39	1163	3.54	1206	3.69	1247	3.85	1287	4.00	1327	4.16
5000	961	2.99	1011	3.18	1059	3.35	1106	3.52	1151	3.68	1194	3.84	1236	3.99	1277	4.14	1318	4.29	1357	4.45
5200	993	3.31	1043	3.49	1092	3.67	1138	3.84	1183	4.00	1226	4.15	1269	4.30	1310	4.46	1350	4.61	1390	4.77
5400	1027	3.64	1077	3.83	1126	4.00	1172	4.17	1217	4.33	1260	4.48	1302	4.64	1344	4.79	1384	4.94	1424	5.10
5600	1063	3.99	1113	4.18	1161	4.35	1207	4.52	1252	4.68	1296	4.84	1338	4.99	1379	5.14	1419	5.29	1459	5.45
5800	1100	4.36	1150	4.55	1198	4.72	1244	4.89	1289	5.05	1333	5.20	1375	5.36	1416	5.51	1456	5.66	-	-
6000	1138	4.75	1188	4.93	1237	5.11	1283	5.28	1328	5.44	1371	5.59	1413	5.74	-	-	-	-	-	-
6200	1178	5.15	1228	5.34	1277	5.51	1323	5.68	-	-	-	-	-	-	-	-	-	-	-	-
	High static 5 HP and drive				5 HP and field supplied drive															

1. Blower performance includes gas heat exchangers and 2 in. filters. See the static resistance table for additional applications.
2. See the RPM selection table to determine the required motor sheave setting and to determine the maximum continuous BHP.
3. kW = BHP x 0.932.

Table 19: Airflow performance - bottom duct application

ZR078 (6.5 ton) bottom duct

Air flow (CFM)	Available external static pressure - IWG[1]																			
	0.2		0.4		0.6		0.8		1.0		1.2		1.4		1.6		1.8		2.0	
	RPM	BHP	RPM	BHP	RPM	BHP	RPM	BHP	RPM	BHP	RPM	BHP	RPM	BHP	RPM	BHP	RPM	BHP	RPM	BHP
	1.5 HP and field supplied drive				Standard 1.5 HP and drive						High static 2 HP and drive									
1800	801	0.45	874	0.65	946	0.82	1018	0.97	1090	1.11	1163	1.25	1238	1.38	1315	1.52	1395	1.68	1477	1.86
2000	831	0.59	903	0.78	975	0.95	1047	1.10	1119	1.24	1193	1.38	1267	1.51	1344	1.66	1424	1.81	1507	1.99
2200	867	0.74	940	0.93	1012	1.10	1084	1.25	1156	1.39	1229	1.53	1304	1.66	1381	1.81	1461	1.96	1543	2.14
2400	910	0.91	983	1.10	1055	1.27	1126	1.43	1199	1.57	1272	1.70	1347	1.84	1424	1.98	1503	2.14	-	-
2600	957	1.10	1030	1.30	1102	1.47	1174	1.62	1246	1.76	1320	1.89	1394	2.03	1471	2.17	-	-	-	-
2800	1009	1.32	1082	1.51	1154	1.69	1225	1.84	1298	1.98	1371	2.11	1446	2.25	-	-	-	-	-	-
3000	1064	1.56	1137	1.75	1208	1.92	1280	2.08	1353	2.22	-	-	-	-	-	-	-	-	-	-
3200	1122	1.82	1194	2.02	1266	2.19	-	-	-	-	-	-	-	-	-	-	-	-	-	-
3400	1182	2.10	1254	2.30	-	-	-	-	-	-	-	-	-	-	-	-	-	-	-	-
					2 HP and field supplied drive															

1. Blower performance includes gas heat exchangers and 2 in. filters. See the static resistance table for additional applications.
2. See the RPM selection table to determine the required motor sheave setting and to determine the maximum continuous BHP.
3. kW = BHP x 0.932.

ZR090 (7.5 ton) bottom duct

Air flow (CFM)	Available external static pressure - IWG[1]																			
	0.2		0.4		0.6		0.8		1.0		1.2		1.4		1.6		1.8		2.0	
	RPM	BHP	RPM	BHP	RPM	BHP	RPM	BHP	RPM	BHP	RPM	BHP	RPM	BHP	RPM	BHP	RPM	BHP	RPM	BHP
	1.5 HP and field supplied drive		Standard 1.5 HP and drive								High static 3 HP and drive									
2000	831	0.59	903	0.78	975	0.95	1047	1.10	1119	1.24	1193	1.38	1267	1.51	1344	1.66	1424	1.81	1507	1.99
2200	867	0.74	940	0.93	1012	1.10	1084	1.25	1156	1.39	1229	1.53	1304	1.66	1381	1.81	1461	1.96	1543	2.14
2400	910	0.91	983	1.10	1055	1.27	1126	1.43	1199	1.57	1272	1.70	1347	1.84	1424	1.98	1503	2.14	1586	2.31
2600	957	1.10	1030	1.30	1102	1.47	1174	1.62	1246	1.76	1320	1.89	1394	2.03	1471	2.17	1551	2.33	1634	2.51
2800	1009	1.32	1082	1.51	1154	1.69	1225	1.84	1298	1.98	1371	2.11	1446	2.25	1523	2.39	1602	2.55	1685	2.73
3000	1064	1.56	1137	1.75	1208	1.92	1280	2.08	1353	2.22	1426	2.35	1501	2.49	1578	2.63	1657	2.79	1740	2.96
3200	1122	1.82	1194	2.02	1266	2.19	1338	2.34	1410	2.48	1484	2.61	1559	2.75	1636	2.89	1715	3.05	1798	3.23
3400	1182	2.10	1254	2.30	1326	2.47	1398	2.62	1471	2.76	1544	2.90	1619	3.03	1696	3.17	1775	3.33	-	-
3600	1244	2.41	1317	2.60	1389	2.77	1461	2.93	1533	3.07	1606	3.20	1681	3.33	-	-	-	-	-	-
3800	1308	2.73	1381	2.93	1453	3.10	1525	3.25	1597	3.39	-	-	-	-	-	-	-	-	-	-
			3 HP and field supplied drive																	

1. Blower performance includes gas heat exchangers and 2 in. filters. See the static resistance table for additional applications.
2. See the RPM selection table to determine the required motor sheave setting and to determine the maximum continuous BHP.
3. kW = BHP x 0.932.

ZR102 (8.5 ton) bottom duct

Air flow (CFM)	Available external static pressure - IWG[1]																			
	0.2		0.4		0.6		0.8		1.0		1.2		1.4		1.6		1.8		2.0	
	RPM	BHP	RPM	BHP	RPM	BHP	RPM	BHP	RPM	BHP	RPM	BHP	RPM	BHP	RPM	BHP	RPM	BHP	RPM	BHP
	2 HP and field supplied drive		Standard 2 HP and drive								High static 3 HP and drive									
2200	715	0.72	768	0.85	818	0.98	867	1.09	914	1.21	960	1.32	1004	1.43	1047	1.53	1089	1.64	1131	1.75
2400	734	0.83	786	0.96	837	1.08	886	1.20	933	1.31	978	1.42	1022	1.53	1066	1.64	1108	1.75	1150	1.86
2600	755	0.95	808	1.08	858	1.20	907	1.32	954	1.44	1000	1.55	1044	1.65	1087	1.76	1129	1.87	1171	1.98
2800	779	1.09	832	1.22	882	1.35	931	1.46	978	1.58	1024	1.69	1068	1.80	1111	1.90	1153	2.01	1195	2.12
3000	806	1.25	859	1.38	910	1.51	958	1.63	1005	1.74	1051	1.85	1095	1.96	1138	2.07	1181	2.17	1222	2.28
3200	837	1.44	889	1.57	940	1.69	989	1.81	1036	1.93	1081	2.04	1125	2.14	1168	2.25	1211	2.36	1252	2.47
3400	870	1.65	922	1.78	973	1.90	1022	2.02	1069	2.13	1114	2.24	1158	2.35	1202	2.46	1244	2.57	1286	2.68
3600	906	1.88	959	2.01	1009	2.13	1058	2.25	1105	2.36	1150	2.47	1195	2.58	1238	2.69	1280	2.80	1322	2.91
3800	945	2.13	998	2.26	1048	2.38	1097	2.50	1144	2.61	1190	2.72	1234	2.83	1277	2.94	1319	3.05	1361	3.16
4000	987	2.40	1040	2.53	1090	2.66	1139	2.78	1186	2.89	1231	3.00	1276	3.11	1319	3.21	1361	3.32	1403	3.43
4200	1032	2.70	1084	2.83	1135	2.95	1184	3.07	1231	3.18	1276	3.29	1320	3.40	-	-	-	-	-	-
					3 HP and field supplied drive															

1. Blower performance includes gas heat exchangers and 2 in. filters. See the static resistance table for additional applications.
2. See the RPM selection table to determine the required motor sheave setting and to determine the maximum continuous BHP.
3. kW = BHP x 0.932.

ZR120 (10 ton) bottom duct

Air flow (CFM)	Available external static pressure - IWG[1]																			
	0.2		0.4		0.6		0.8		1.0		1.2		1.4		1.6		1.8		2.0	
	RPM	BHP	RPM	BHP	RPM	BHP	RPM	BHP	RPM	BHP	RPM	BHP	RPM	BHP	RPM	BHP	RPM	BHP	RPM	BHP
	2 HP and field supplied drive		Standard 2 HP and drive								High static 3 HP and drive									
2600	755	0.95	808	1.08	858	1.20	907	1.32	954	1.44	1000	1.55	1044	1.65	1087	1.76	1129	1.87	1171	1.98
2800	779	1.09	832	1.22	882	1.35	931	1.46	978	1.58	1024	1.69	1068	1.80	1111	1.90	1153	2.01	1195	2.12
3000	806	1.25	859	1.38	910	1.51	958	1.63	1005	1.74	1051	1.85	1095	1.96	1138	2.07	1181	2.17	1222	2.28
3200	837	1.44	889	1.57	940	1.69	989	1.81	1036	1.93	1081	2.04	1125	2.14	1168	2.25	1211	2.36	1252	2.47
3400	870	1.65	922	1.78	973	1.90	1022	2.02	1069	2.13	1114	2.24	1158	2.35	1202	2.46	1244	2.57	1286	2.68
3600	906	1.88	959	2.01	1009	2.13	1058	2.25	1105	2.36	1150	2.47	1195	2.58	1238	2.69	1280	2.80	1322	2.91
3800	945	2.13	998	2.26	1048	2.38	1097	2.50	1144	2.61	1190	2.72	1234	2.83	1277	2.94	1319	3.05	1361	3.16
4000	987	2.40	1040	2.53	1090	2.66	1139	2.78	1186	2.89	1231	3.00	1276	3.11	1319	3.21	1361	3.32	1403	3.43
4200	1032	2.70	1084	2.83	1135	2.95	1184	3.07	1231	3.18	1276	3.29	1320	3.40	-	-	-	-	-	-
4400	1079	3.01	1132	3.15	1182	3.27	1231	3.39	-	-	-	-	-	-	-	-	-	-	-	-
4600	1129	3.35	-	-	-	-	-	-	-	-	-	-	-	-	-	-	-	-	-	-
	3 HP and field supplied drive																			

1. Blower performance includes gas heat exchangers and 2 in. filters. See the static resistance table for additional applications.
2. See the RPM selection table to determine the required motor sheave setting and to determine the maximum continuous BHP.
3. kW = BHP x 0.932.

ZR150 (12.5 ton) bottom duct

Air flow (CFM)	Available external static pressure - IWG[1]																			
	0.2		0.4		0.6		0.8		1.0		1.2		1.4		1.6		1.8		2.0	
	RPM	BHP	RPM	BHP	RPM	BHP	RPM	BHP	RPM	BHP	RPM	BHP	RPM	BHP	RPM	BHP	RPM	BHP	RPM	BHP
	3 HP and field supplied drive		Standard 3 HP and drive										High static 5 HP and drive							
3200	837	1.44	889	1.57	940	1.69	989	1.81	1036	1.93	1081	2.04	1125	2.14	1168	2.25	1211	2.36	1252	2.47
3400	870	1.65	922	1.78	973	1.90	1022	2.02	1069	2.13	1114	2.24	1158	2.35	1202	2.46	1244	2.57	1286	2.68
3600	906	1.88	959	2.01	1009	2.13	1058	2.25	1105	2.36	1150	2.47	1195	2.58	1238	2.69	1280	2.80	1322	2.91
3800	945	2.13	998	2.26	1048	2.38	1097	2.50	1144	2.61	1190	2.72	1234	2.83	1277	2.94	1319	3.05	1361	3.16
4000	987	2.40	1040	2.53	1090	2.66	1139	2.78	1186	2.89	1231	3.00	1276	3.11	1319	3.21	1361	3.32	1403	3.43
4200	1032	2.70	1084	2.83	1135	2.95	1184	3.07	1231	3.18	1276	3.29	1320	3.40	1364	3.51	1406	3.62	1447	3.73
4400	1079	3.01	1132	3.15	1182	3.27	1231	3.39	1278	3.50	1324	3.61	1368	3.72	1411	3.83	1453	3.93	1495	4.05
4600	1129	3.35	1182	3.48	1232	3.61	1281	3.72	1328	3.84	1374	3.95	1418	4.06	1461	4.16	1503	4.27	1545	4.38
4800	1182	3.71	1235	3.84	1285	3.96	1334	4.08	1381	4.20	1426	4.31	1471	4.41	1514	4.52	1556	4.63	1598	4.74
5000	1237	4.08	1290	4.22	1340	4.34	1389	4.46	1436	4.57	1481	4.68	1526	4.79	1569	4.90	1611	5.01	1653	5.12
5200	1294	4.48	1347	4.61	1398	4.74	1446	4.85	1493	4.97	1539	5.08	1583	5.19	1626	5.29	1669	5.40	1710	5.51
5400	1354	4.89	1407	5.03	1457	5.15	1506	5.27	1553	5.38	1599	5.49	1643	5.60	1686	5.71	-	-	-	-
5600	1416	5.33	1469	5.46	1519	5.58	1568	5.70	-	-	-	-	-	-	-	-	-	-	-	-
5800	-	-	-	-	-	-	-	-	-	-	-	-	-	-	-	-	-	-	-	-
	5 HP and field supplied drive																			

1. Blower performance includes gas heat exchangers and 2 in. filters. See the static resistance table for additional applications.
2. See the RPM selection table to determine the required motor sheave setting and to determine the maximum continuous BHP.
3. kW = BHP x 0.932.

Table 20: RPM selection

Size (tons)	Model	HP	Max BHP	Motor sheave	Blower sheave	6 turns open	5 turns open	4 turns open	3 turns open	2 turns open	1 turn open	Fully closed
078	ZR	1.5	1.73	1VM50	AK74	N/A	897	945	991	1035	1079	1126
(6.5)		2	2.30	1VM50	AK64	N/A	1039	1094	1150	1207	1256	1308
090	ZR	1.5	1.73	1VM50	AK74	N/A	897	945	991	1035	1079	1126
(7.5)		3	3.45	1VM50	AK61	N/A	1088	1147	1205	1265	1312	1365
102	ZR	2	2.30	1VM50	AK89	N/A	735	775	815	851	889	930
(8.5)		3	3.45	1VM50	AK74	N/A	880	928	972	1016	1067	1110
120	ZR	2	2.30	1VM50	AK84	N/A	785	821	858	901	940	980
(10)		3	3.45	1VM50	AK74	N/A	880	928	972	1016	1067	1110
150	ZR	3	3.45	1VM50	AK74	N/A	880	928	972	1016	1067	1110
(12.5)		5	5.75	1VP56	BK77	1052	1095	1136	1175	1216	1272	N/A

Table 21: Indoor blower specifications

Size (tons)	Model	Motor					Motor sheave			Blower sheave			Belt
		HP	RPM	Eff.	SF	Frame	Datum dia. (in.)	Bore (in.)	Model	Datum dia. (in.)	Bore (in.)	Model	
078 (6.5)	ZR	1-1/2	1725	0.8	1.15	56	3.4 - 4.4	7/8	1VM50	7.0	1	AK74	A49
		2	1725	0.8	1.15	56	3.4 - 4.4	7/8	1VM50	6.0	1	AK64	A49
090 (7.5)	ZR	1-1/2	1725	0.8	1.15	56	3.4 - 4.4	7/8	1VM50	7.0	1	AK74	A49
		3	1725	0.8	1.15	56	3.4 - 4.4	7/8	1VM50	5.7	1	AK61	A49
102 (8.5)	ZR	2	1725	0.8	1.15	56	3.4 - 4.4	7/8	1VM50	8.5	1	AK89	A56
		3	1725	0.8	1.15	56	3.4 - 4.4	7/8	1VM50	7.0	1	AK74	A54
120 (10)	ZR	2	1725	0.8	1.15	56	3.4 - 4.4	7/8	1VM50	8.0	1	AK84	A56
		3	1725	0.8	1.15	56	3.4 - 4.4	7/8	1VM50	7.0	1	AK74	A54
150 (12.5)	ZR	3	1725	0.8	1.15	56	3.4 - 4.4	7/8	1VM50	7.0	1	AK74	A54
		5	1725	0.87	1.15	184T	4.3 - 5.3	1-1/8	1VP56	6.7	1	BK77	BX55

Table 22: Power exhaust specifications

Model	Voltage	Motor			Unit (per circuit)			Fuse size	CFM @ 0.1 ESP
		HP	RPM[1]	QTY	LRA	FLA	MCA		
2PE04704706	208/230-1-60	3/4	1075	1	24.9	5	6.3	10	4800
2PE04704746	460-1-60	3/4	1075	1	N/A	2.2	2.8	5	4800
2PE04704758	575-1-60	3/4	1050	1	N/A	1.5	1.9	4	4800

1. Motors are multi-tapped and factory wired for high speed.

Air balance

Start the supply air blower motor. Adjust the resistances in both the supply and the return air duct systems to balance the air distribution throughout the conditioned space. The job specifications may require that this balancing be done by someone other than the equipment installer.

⚠ CAUTION

You must adjust the belt drive blower systems to the specific static and CFM requirements for the application.

The belt drive blowers are not set at the factory for any specific static or CFM. You must adjust the blower speed and belt tension.

Verify proper sheave alignment. Tighten the blower pulley and motor sheave set screws after these adjustments. Re-check the set screws after 10-12 hours of run time.

Checking air quantity

Method one

1. Remove the dot plugs from the duct panel. See Figures 12 and 13.
2. Insert eight-inches of 1/4 inch metal tubing into the airflow on both sides of the indoor coil.

Note: You must insert the tubes and hold them in a position perpendicular to the air flow so that velocity pressure does not affect the static pressure readings.

3. Use an inclined manometer or Magnehelic® to determine the pressure drop across a dry evaporator coil. The moisture on an evaporator coil can vary greatly, measuring the pressure drop across a wet coil under field conditions could be inaccurate. To ensure that the coil is dry, de-activate the compressors de-activated while the test is being run.

Note: De-energize the compressors before you take any test measurements to ensure that the evaporator coil is dry.

4. Use the pressure drop indicated by the manometer and the graph in Figure 30 to determine the unit CFM. In order to obtain an accurate measurement, verify that the air filters are clean.
5. To adjust measured CFM to required CFM, see *Supply air drive adjustment* on page 48.
6. After you note the readings, remove the tubes and replace the dot plugs.
7. Tighten the blower pulley and motor sheave set screws after any adjustments. Re-check the set screws after 10-12 hours run time.

⚠ WARNING

Failure to properly adjust the total system air quantity can result in extensive blower damage.

Method two

1. Drill two 5/16 inch holes, one in the return air duct as close to the inlet of the unit as possible, and another in the supply air duct as close to the outlet of the unit as possible.

2. Using the hole drilled in step 1, insert eight inches of 1/4 inch metal tubing into the airflow of the return and supply air ducts of the unit.

Note: You must insert the tubes and hold them in a position perpendicular to the air flow so that velocity pressure does not affect the static pressure readings.

3. Use an inclined manometer or Magnehelic® to determine the pressure drop across the unit. This is the external static pressure (ESP). In order to obtain an accurate measurement, verify that the air filters are clean.
4. Determine the number of turns the variable motor sheave is open.
5. Select the correct blower performance table for the unit from Table 18. Tables are presented for side and bottom duct configuration.
6. Determine the unit measured CFM from the blower performance table, external static pressure, and the number of turns the variable motor sheave is open.
7. To adjust measured CFM to required CFM, see *Supply air drive adjustment* on page 48.
8. After you note the reading, remove the tubes and seal the holes.
9. Tighten the blower pulley and motor sheave set screws after any adjustments. Re-check the set screws after 10-12 hours run time.

Note: You must repeat this procedure with the addition of field-installed accessories.

⚠WARNING

Failure to properly adjust the total system air quantity can result in extensive blower damage.

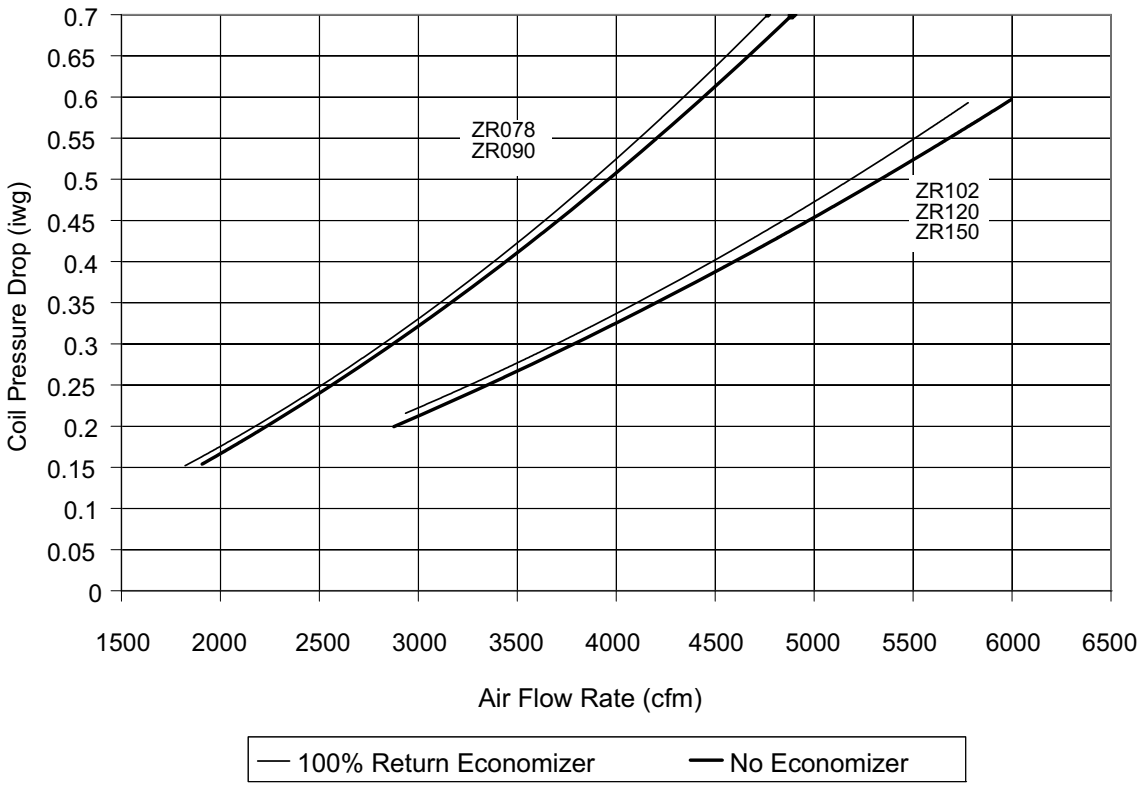

Figure 30: Dry coil delta P

Supply air drive adjustment

⚠ CAUTION

Before you make any blower speed changes, review the installation for any installation errors, leaks, or undesirable systems effects that can result in loss of airflow.

Even small changes in blower speed can result in substantial changes in static pressure and BHP. BHP and AMP draw of the blower motor increase by the cube of the blower speed. Static pressure increases by the square of the blower speed. Only qualified personnel can make blower speed changes, strictly adhering to the fan laws.

At unit start-up, the measured CFM may be higher or lower than the required CFM. To achieve the required CFM, you may need to adjust the speed of the drive by changing the datum diameter (DD) of the variable pitch motor sheave as described below:

$$\left(\frac{4{,}000\ \text{CFM}}{3{,}800\ \text{CFM}}\right) \cdot 4.0\ \text{in.} = 4.21\ \text{in.}$$

Use the following tables and the DD calculated per the above equation to adjust the motor variable pitch sheave.

⚠ CAUTION

You must adjust the belt drive blower systems to the specific static and CFM requirements for the application.

The belt drive blowers are not set at the factory for any specific static or CFM. You must adjust the blower speed and belt tension.

Verify proper sheave alignment. Tighten the blower pulley and motor sheave set screws after these adjustments. Re-check the set screws after 10-12 hours of run time.

Example

A 12.5 ton unit was selected to deliver 4,000 CFM with a 3 HP motor, but the unit is delivering 3,800 CFM. The variable pitch motor sheave is set at 2 turns open.

Use the equation to determine the required DD for the new motor sheave,

$$\left(\frac{\text{Required CFM}}{\text{Measured CFM}}\right) \cdot \text{Existing DD} = \text{New DD}$$

Use Table 23 to locate the DD nearest to 4.21 in. Close the sheave to 1 turn open.

New BHP

= (Speed increase)^3 • BHP at 3,800 CFM

= (Speed increase)^3 • Original BHP

= New BHP

New motor Amps

= (Speed increase)^3 • Amps at 3,800 CFM

= (Speed increase)^3 • Original Amps

= New Amps

Table 23: Motor sheave datum diameters

1VM50x7/8 (1-1/2, 2, and 3 HP motor)		1VP56x1-1/8 (5 HP motor)	
Turns open	**Datum diameter**	**Turns open**	**Datum diameter**
0	4.4	1	5.3
1/2	4.3	1-1/2	5.2
1	4.2	2	5.1
1-1/2	4.1	2-1/2	5.0
2	4.0	3	4.9
2-1/2	3.9	3-1/2	4.8
3	3.8	4	4.7
3-1/2	3.7	4-1/2	4.6
4	3.6	5	4.5
4-1/2	3.5	5-1/2	4.4
5	3.4	6	4.3

Table 24: Additional static resistance

Size (tons)	Model	CFM	Cooling only[1]	Economizer[2 3]	4 in. filter[2]	Electric heat kW[2]				
						95	18	24	36	54
078 (6.5) 090 (7.5)	ZR	1900	0.00	0.07	0.10	0.05	0.06	0.07	0.08	0.10
		2100	-0.01	0.09	0.11	0.06	0.07	0.08	0.09	0.11
		2300	-0.01	0.11	0.12	0.07	0.08	0.09	0.10	0.13
		2500	-0.02	0.13	0.14	0.08	0.09	0.10	0.11	0.14
		2700	-0.03	0.16	0.15	0.09	0.10	0.12	0.13	0.16
		2900	-0.04	0.18	0.16	0.10	0.11	0.13	0.14	0.18
		3100	-0.05	0.20	0.18	0.12	0.13	0.15	0.16	0.20
		3300	-0.06	0.22	0.19	0.13	0.14	0.17	0.18	0.22
		3500	-0.07	0.24	0.20	0.15	0.16	0.19	0.20	0.24
		3700	-0.08	0.27	0.21	0.17	0.18	0.21	0.22	0.26
		3900	-0.09	0.29	0.23	0.19	0.20	0.23	0.24	0.28
		4100	-0.09	0.31	0.24	0.21	0.22	0.25	0.26	0.31
		4300	-0.10	0.30	0.25	0.23	0.24	0.28	0.29	0.34
		4500	-0.11	0.35	0.26	0.25	0.26	0.30	0.31	0.37
102 (8.5) 120 (10) 150 (12.5)	ZR	1900	0.06	0.02	0.12	0.05	0.06	0.07	0.08	0.10
		2100	0.07	0.02	0.13	0.06	0.07	0.08	0.09	0.11
		2300	0.08	0.04	0.14	0.07	0.08	0.09	0.10	0.13
		2500	0.09	0.11	0.16	0.08	0.09	0.10	0.11	0.14
		2700	0.11	0.18	0.17	0.09	0.10	0.12	0.13	0.16
		2900	0.12	0.25	0.19	0.10	0.11	0.13	0.14	0.18
		3100	0.14	0.31	0.20	0.12	0.13	0.15	0.16	0.20
		3300	0.16	0.37	0.22	0.13	0.14	0.17	0.18	0.22
		3500	0.18	0.43	0.26	0.15	0.16	0.19	0.20	0.24
		3700	0.20	0.49	0.27	0.17	0.18	0.21	0.22	0.26
		3900	0.23	0.54	0.29	0.19	0.20	0.23	0.24	0.28
		4100	0.25	0.58	0.32	0.21	0.22	0.25	0.26	0.31
		4300	0.28	0.65	0.35	0.23	0.24	0.28	0.29	0.34
		4500	0.30	0.69	0.38	0.25	0.26	0.30	0.31	0.37
		4700	0.33	0.74	0.41	0.28	0.29	0.33	0.34	0.40
		4900	0.36	0.78	0.44	0.30	0.31	0.35	0.37	0.43
		5100	0.39	0.82	0.47	0.33	0.34	0.38	0.40	0.46
		5300	0.42	0.86	0.51	0.35	0.37	0.41	0.43	0.49
		5500	0.45	0.89	0.55	0.38	0.40	0.44	0.46	0.53
		5700	0.48	0.93	0.58	0.41	0.43	0.47	0.49	0.56
		5900	0.52	0.96	0.62	0.44	0.46	0.50	0.53	0.59
		6100	0.56	0.98	0.67	0.47	0.49	0.53	0.56	0.62
		6300	0.60	1.01	0.71	0.50	0.53	0.56	0.59	0.65

1. Add these values to the available static resistance in the respective blower performance tables.
2. Deduct these values from the available external static pressure shown in the respective blower performance tables.
3. The pressure drop through the economizer is greater for 100% outdoor air than for 100% return air. If the resistance of the return air duct is less than 0.25 IWG, the unit will deliver less CFM during full economizer operation.

Operation

Cooling sequence of operation

NOTE: For more in-depth sequence of operation of the Smart Equipment™ control, refer to the *Smart Equipment™ Controls Sequence of Operation Overview* LIT-12011950 available from your equipment dealer or distributor.

For ZR units, a Y1 call for the first stage of cooling is passed to the Unit Control Board (UCB) which then determines whether the requested operation is available and if so, which components to energize. With a Y1 call for first stage cooling the UCB determines if a first stage cooling output is valid as long as all safeties and time-delays allow a C1 output for cooling. The C1 relay on the UCB closes and send 24 volts to the M1 relay starting the first stage compressor and also energizing the associated condenser fans. During any call for fan or cooling the FAN output on the UCB energizes the M3 relay starting the supply fan.

If a Y2 call is present it is passed to the Unit Control Board (UCB) which then determines whether the requested operation is available and if so, which components to energize. With a Y2 call for first stage cooling the UCB determines if a second stage cooling output is valid as long as all safeties and time-delays allow a C2 output for cooling. The C2 relay on the UCB closes and send 24v to the M2 contactor starting the second stage compressor also energizing the associated condenser fans. During any call for fan or cooling the FAN output on the UCB will energize the M3 contactor starting the supply fan.

Continuous blower

By setting the room thermostat fan switch to ON, the supply air blower operates continuously.

Intermittent blower

With the room thermostat fan switch set to AUTO and the system switch set to either the AUTO or HEAT settings, the blower is energized whenever a cooling or heating operation is requested. The blower is energized after any specified delay associated with the operation.

When energized, the indoor blower has a minimum run time of 30 seconds. Additionally, the indoor blower has a delay of 10 seconds minimum off.

No outdoor air options

When the thermostat calls for the first stage of cooling, the low-voltage control circuit from R to Y1 and G is completed. The UCB energizes the economizer (if installed and free cooling is available) or the first available compressor* and the condenser fans. For first stage cooling, compressor #1 is energized. If compressor #1 is unavailable, compressor #2 is energized. After completing the specified fan on delay for cooling, the UCB energizes the blower motor.

When the thermostat calls for the second stage of cooling, the low-voltage control circuit from R to Y2 is completed. The control board energizes the first available compressor. If free cooling is being used for the first stage of cooling, compressor #1 is energized. If compressor #1 is active for first stage cooling or the first compressor is locked-out, compressor #2 is energized. In free-cooling mode, if the call for the second stage of cooling continues for 20 minutes, compressor #2 is energized, provided it has not been locked-out.

If there is an initial call for both stages of cooling, the UCB delays energizing compressor #2 by 30 seconds in order to avoid a power rush.

When the thermostat is satisfied, it de-energizes Y1 and Y2. If the compressors have satisfied their minimum run times, the compressors and condenser fans are de-energized. Otherwise, the unit operates each cooling system until the minimum run times for the compressors have been completed. Upon the final compressor de-energizing, the blower is stopped following the elapse of the fan off delay for cooling.

* To be available, a compressor must not be locked-out due to a high or low-pressure switch or the **Evaporator Low Limit Sensor (EC1, 2)** detects a temperature below 26°F and the **Anti-Short Cycle Delay (ASCD)** must have elapsed.

Economizer with single enthalpy sensor

When the room thermostat calls for first-stage cooling, the low voltage control circuit from R to G and Y1 is completed. The UCB energizes the blower motor (if the fan switch on the room thermostat is set in the AUTO position) and drives the economizer dampers from fully closed to their minimum position. If the enthalpy of the outdoor air is below the setpoint of the enthalpy controller (previously determined), Y1 energizes the economizer. The dampers modulates to maintain a constant supply air temperature as monitored by the discharge air sensor. If the outdoor air enthalpy is above the setpoint, Y1 energizes compressor #1.

When the thermostat calls for second-stage cooling, the low voltage control circuit from R to Y2 is completed. The UCB energizes the first available compressor. If the enthalpy of the outdoor air is below the setpoint of the enthalpy controller (that is first stage has energized the economizer), Y2 energizes compressor #1. If the outdoor air is above the setpoint, Y2 energizes compressor #2.

When the thermostat is satisfied, it de-energizes Y1 and Y2. If the compressors have satisfied their minimum run times, the compressors and condenser fans are de-energized. Otherwise, the unit operates each cooling system until the minimum run times for the compressors have been completed. Upon the final compressor de-energizing, the blower is stopped following the elapse of the fan off delay for cooling, and the economizer damper goes to the closed position. If the unit is in continuous fan operation, the economizer damper goes to the minimum position.

Economizer with dual enthalpy sensors

The operation with the dual enthalpy sensors is identical to the single sensor except that a second enthalpy sensor is mounted in the return air. This return air sensor allows the economizer to choose between outdoor air and return air, whichever has the lowest enthalpy value, to provide maximum operating efficiency.

Economizer with power exhaust

A unit equipped with an economizer (single or dual enthalpy) and a power exhaust operates as specified above with one addition. The power exhaust motor is energized 45 seconds after the actuator position exceeds the exhaust fan setpoint on the economizer control. As always, the R to G connection provides minimum position but does not provide power exhaust operation.

Motorized outdoor air dampers

This system operation is the same as the units with no outdoor air options with one exception. When the R to G circuit is complete, the motorized damper drives open to a position set by the thumbwheel on the damper motor. When the R to G circuit is opened, the damper spring returns fully closed.

Cooling operation errors

Each cooling system is monitored for operation outside of the intended parameters. Errors are handled as described below. All system errors override minimum run times for compressors.

NOTE: The following components are needed to access the control points in the Smart Equipment™ control.

1. Local LCD on the unit control board.

OR

2. Mobile Access Portal (MAP) Gateway (Portable).
   - Source 1 P/N S1-JC-MAP1810-OP
   - MAP Gateway Quick Start Guide P/N 24-10737-16
   - MAP Gateway Instruction P/N 24-10737-8

High-pressure limit switch

During cooling operation, if a high-pressure limit switch opens, the UCB de-energizes the associated compressor, initiates the ASCD (Anti-short cycle delay), and, if the other compressor is idle, stops the condenser fans. If the call for cooling is still present at the conclusion of the ASCD, the UCB re-energizes the halted compressor.

If a high-pressure switch opens three times within two hours of operation, the UCB locks out the associated compressor. If the other compressor is inactive, the condenser fans is de-energized.

Low-pressure limit switch

The low-pressure limit switch is not monitored during the initial 30 seconds of a cooling system's operation. For the following 30 seconds, the UCB monitors the low-pressure switch to ensure it closes. If the low-pressure switch fails to close after the 30-second monitoring phase, the UCB de-energizes the associated compressor, initiates the ASCD, and, if the other compressor is idle, stops the condenser fans.

When the low-pressure switch is proven (closed during the 30-second monitor period described above), the UCB monitors the low-pressure limit switch for any openings. If the low-pressure switch opens for greater than 5 seconds, the UCB de-energizes the associated compressor, initiates the ASCD, and, if the other compressor is idle, stops the condenser fans.

If the call for cooling is still present at the conclusion of the ASCD, the UCB re-energizes the halted compressor.

If a low-pressure switch opens three times within one hour of operation, the UCB locks out the associated compressor. If the other compressor is inactive, the condenser fans are de-energized.

Evaporator low limit

During cooling operation, if the **Evaporator Low Limit Sensor (EC1, 2)** (Located on the Suction Line at the Evaporator Coil.) detects a temperature below 26 Deg. F (default), the UCB de-energizes the associated compressor, initiate the ASCD, and, if the other compressor is idle, stops the condenser fans. If the call for cooling is still present at the conclusion of the ASCD, the UCB re-energizes the halted compressor. If the UCB detects the evaporator low limit sensor **(EC1, 2)** falling below 26ºF (default) three times within two hours of operation, the UCB locks out the associated compressor. If the other compressor is inactive, the condenser fans are de-energized.

Low ambient cooling

To determine when to operate in low ambient mode, the UCB has an **Outdoor Air Temperature Sensor (OAT)** with a low ambient setpoint at 45ºF (default). When the **OAT Sensor** senses a temperature below the low ambient setpoint and the thermostat is calling for cooling, the UCB operates in the low ambient mode.

Low ambient mode operates the compressors in this manner: 10 minutes on, 5 minutes off. The indoor blower is operated throughout the cycle. The 5-minute off period is necessary to defrost the indoor coil.

Low ambient mode always begins with compressor operation. Compressor minimum run time may extend the minutes of compressor operation. The off cycle will begin immediately following the elapse of the minimum run time.

When operating in low ambient mode, an evaporator low limit sensor **(EC1, 2)** temperature below 26ºF de-energizes the associated compressor. If the call for cooling is still present at the end of the ASCD and the and the evaporator temperature sensor **(EC1, 2)** temperature is above 26°F, the unit resumes operation.

Safety controls

The unit control board monitors the following inputs for each cooling system:

1. An evaporator low limit sensor **(EC1, 2)** (Located on the Suction Line at the Evaporator Coil.) to protect against low evaporator temperatures due to a low airflow or a low return air temperature, set at 26°F.
2. A high-pressure switch to protect against excessive discharge pressures due to a blocked condenser coil or a condenser motor failure, (opens at 625 ± 25 psig).

3. A low-pressure switch to protect against loss of refrigerant charge, (opens at 50 ± 5 psig).

The above pressure switches are hard-soldered to the unit. The refrigeration systems are independently monitored and controlled. On any fault, only the associated system will be affected by any safety/preventive action. The other refrigerant system will continue in operation unless it is affected by the fault as well.

The unit control board monitors the temperature limit switch of electric heat units and the temperature limit switch and the gas valve of gas furnace units.

Compressor protection

In addition to the external pressure switches, the compressors also have inherent (internal) protection. If there is an abnormal temperature rise in a compressor, the protector will open to shut down the compressor. The UCB incorporates features to minimize compressor wear and damage. An **Anti-Short Cycle Delay (ASCD)** is used to prevent operation of a compressor too soon after its previous run. Additionally, a minimum run time is imposed any time a compressor is energized.

The ASCD is initiated on unit start-up and on any compressor reset or lock-out.

Reheat mode sequence of operation

The MagnaDRY reheat mode of operation is designed to remove latent heat (humidity) from a space when there are low load conditions and the air conditioning unit is not being required to cool the space. The general sequence of operation of the patented MagnaDRY reheat is outlined in the following paragraphs.

The unit control board (UCB) allows the user to select three different modes of operation within the Smart Equipment™ Controller menu. Those modes consist of a Normal, Alternate and, Aux each mode is described below.

Normal cooling mode

When there is a call for first stage cooling, with or without a call for dehumidification, the UCB de-energizes the HGR relay de-energizing SOL 2, SOL 3 (HGRH) and energizes SOL 1, engaging cooling circuit #1 resulting in circuit #1 cooling mode operation. The unit is now in first stage cooling without HGRH. When there is a call for second stage cooling, the UCB engages both circuit #1 and circuit #2 in cooling mode.

The indoor blower operation is always initiated upon a call for first stage cooling, second stage cooling or dehumidification (HGRH). The unit will not operate in the reheat mode if there is any call for heating.

On units with economizers, the unit does not operate in the reheat mode if there is a call for cooling and the economizer is operating as first stage of cooling. All safety devices function as previously described.

Normal reheat mode

When the Unit Control Board (UCB) detects a need for dehumidification via the field installed return/space humidity sensor and there is not a call for cooling, the UCB energizes solenoids SOL 3 (HGRH), SOL 2 and the Reheat Relay (RHR), which de-energizes SOL 1. The unit then operates with refrigerant flow in the evaporator reheat coil and condenser coil circuit # 1. See Figure 32.

On the ZR150 product only, SOL 4 is only energized when the discharge pressure in circuit #1 rises above 400 psig and de-energizes SOL 4 after the discharge pressure falls below 320 psig.

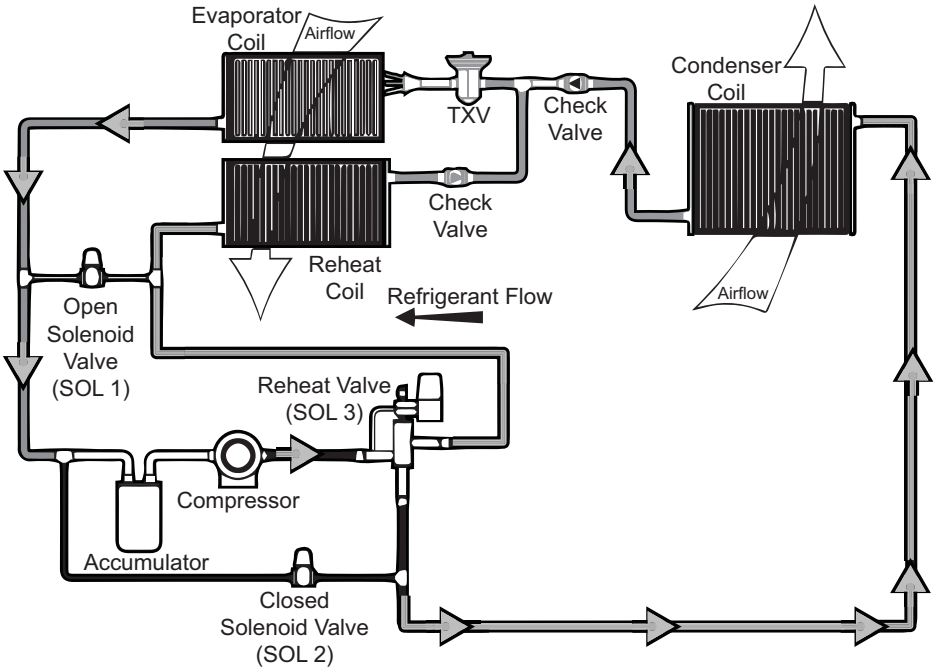

Figure 31: Cooling operation piping schematic - circuit #1 shown

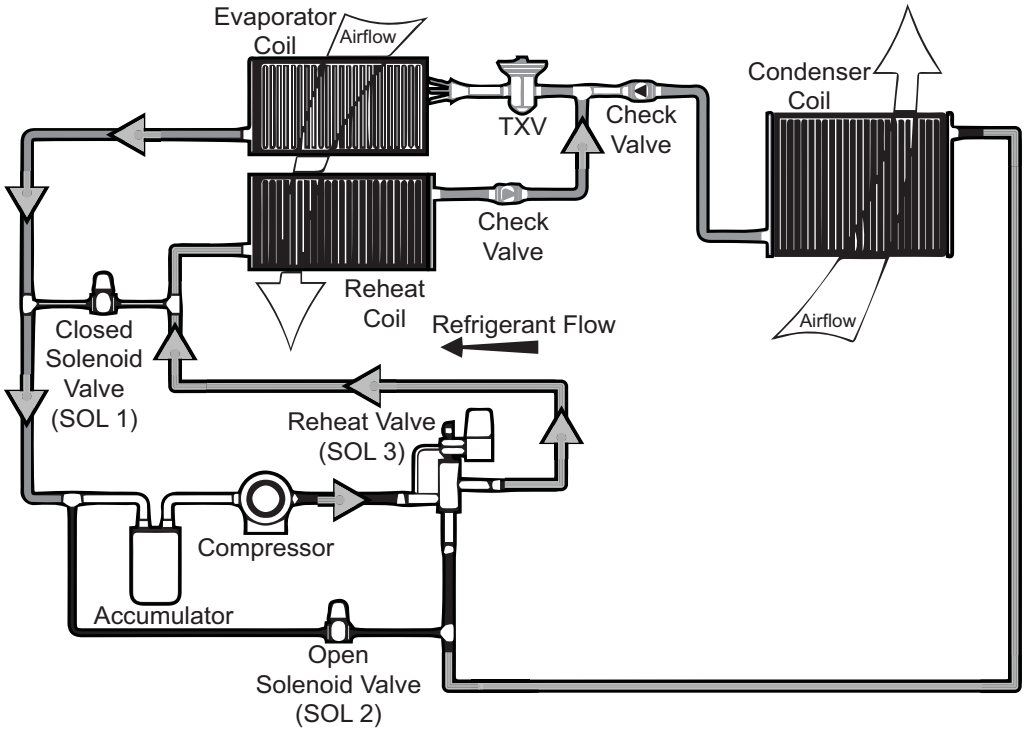

Figure 32: Reheat operation piping schematic - circuit #1 shown

Alternate mode

When the Unit Control Board (UCB) detects a need for dehumidification via the field installed return/space humidity sensor and there is not a call for cooling, the UCB energizes SOL 3, SOL 2, and de-energizes SOL 1. (In the ZR150, SOL 4 is only energized when the discharge pressure in circuit #1 rises above 400 psig and de-energizes SOL 4 after the discharge pressure falls below 320 psig). The unit then operates with circuit #1 in reheat mode and circuit #2 in cooling mode.

When there is a call for first stage cooling while there is still a call for dehumidification, no operational change is made. The call for cooling is ignored and the unit continues to operate with circuit #1 in reheat mode and circuit #2 in cooling mode.

When there is a call for second stage cooling, the UCB de-energizes the HGR, which de-energizes SOL 3 and SOL 2, and energizes SOL 1. Both circuits now operate in the cooling mode.

The indoor blower operation is always initiated upon a call for first stage cooling, second stage cooling or dehumidification (HGRH). The unit does not operate in the reheat mode if there is any call for heating or two stage cooling.

On units with economizers, the unit will not operate in the reheat mode if there is a call for cooling and the economizer is operating as first stage of cooling. All safety devices function as previously described.

Table 25: Dehumidification sequence in normal and alternate mode

Request	Normal mode			Alternate mode		
	HGR	C1	C2	HGR	C1	C2
Dehumidification	On	On	Off	On	On	Off
One stage of cooling (Y1)	Off	On	Off	On	On	On
Two stages of cooling (Y2)	Off	On	On	Off	On	On

Optional Aux mode

The Aux mode available with hot gas reheat units introduces an operating mode that considers the dry bulb temperature in the space when choosing hot gas reheat staging. The Aux mode reduces the amount of over cooling while maintaining humidity control in the space. The Aux mode is only applicable when the unit is setup in the Alternate reheat mode.

If there is a call for dehumidification and no call for cooling the unit automatically reverts back to the Normal hot gas reheat mode only allowing refrigerant stage one to run in reheat mode and refrigerant stage two remains off.

If there is a call for dehumidification and a call for cooling the unit remains in the Alternate hot gas reheat mode allowing refrigerant stage one to run in hot gas reheat or dehumidification mode and refrigerant stage two runs in cooling.

Electric heating sequence of operations

The following sequence describes the operation of the electric heat section.

Two-stage heating:

a. When there is a call for first stage heat by the thermostat, the heater relay (RA) is energized. After completing the specified fan on delay for heating, the UCB energizes the blower motor. If the second stage of heat is required, heater relay (RB) is energized. After completing the specified fan on delay for heating, the UCB energizes the blower motor.

b The thermostat cycles the electric heat to satisfy the heating requirements of the conditioned space.

Electric heat operation errors

Temperature limit

If the UCB senses zero volts from the high temperature limit, the indoor blower motor is immediately energized.

This limit is monitored regardless of unit operation status, that is, the limit is monitored at all times.

If the temperature limit opens three times within one hour, it locks on the indoor blower motor.

Safety controls

The UCB monitors the temperature limit switch of electric heat units.

The control circuit includes the following safety controls:

Limit switch

The limit switch (LS) is located inside the heater compartment and is set to open at the temperature indicated in Table 26, *Electric heat limit setting 50 in. cabinet,* on page 54 and Table 27, *Electric heat limit setting 42 in. cabinet,* on page 54. It resets automatically. The limit switch operates when a high temperature condition caused by inadequate supply air flow occurs. This shuts down the heater and energizes the blower.

Table 26: Electric heat limit setting 50 in. cabinet

Unit (tons)	Voltage	Heater kW	Limit switch opens °F
ZR102, 120, 150 (8.5, 10, 12.5)	208/230	18	150
		24	150
		34	150
		54	130
ZR102, 120, 150 (8.5, 10, 12.5)	480	18	150
		24	150
		34	150
		54	130
ZR102, 120, 150 (8.5, 10, 12.5)	600	18	150
		24	150
		34	150
		54	130

Table 27: Electric heat limit setting 42 in. cabinet

Unit (tons)	Voltage	Heater kW	Limit switch opens °F
ZR078, 090 (6.5, 7.5)	208/230	9	135
		18	150
		24	165
		34	190
ZR078, 090 (6.5, 7.5)	480	9	135
		18	150
		24	165
		34	185
ZR078, 090 (6.5, 7.5)	600	9	135
		18	150
		24	150
		34	185

Reset

Remove the call for heating by lowering the thermostat setting lower than the conditioned space temperature.

Electric heat anticipator setpoints

The anticipator setpoint must be correct. Too high of a setting results in longer heat cycles and a greater temperature swing in the conditioned space. Reducing the value below the correct setpoint gives shorter ON cycles and may result in the lowering of the temperature within the conditioned space. See Table 28 for the required electric heat anticipator setting.

Table 28: Electric heat anticipator setpoints

Setting, amps	
W1	W2
0.13	0.1

Gas heating sequence of operations

When the thermostat calls for the first stage of heating, the low-voltage control circuit from R to W1 is completed. A call for heat passes through the UCB to the ignition control board (ICB). The UCB monitors the W1 call and acts on any call for heat by monitoring the gas valve (GV). When voltage is sensed at the GV, the UCB initiates the fan on delay for heating, energizing the indoor blower the specified delay has elapsed.

When the thermostat is satisfied, heating calls are ceased. The GV is immediately closed. The blower is de-energized after the fan off delay for heating has elapsed. The draft motor performs a 30-second post purge.

Ignition control board

First stage of heating

When the ICB receives a call for first stage of heating, W1, the draft motor is energized. Once the draft motor has been proven, a 30-second purge is initiated. At the end of the purge, the GV is opened and the spark igniter is energized for 10 seconds. The ICB then checks for the presence of flame. If flame is detected, the ICB enters a flame stabilization period. If flame is not detected, the GV closes and a retry operation begins.

During the flame stabilization period, a loss of the flame for 2 seconds causes the GV to close and the retry operation to begin. After the flame stabilization period, a loss of flame for 3/4 second causes the GV to close and the retry operation to begin.

At the conclusion of the flame stabilization period, the ICB operates the gas heat in high fire for an additional 60 seconds, for a total for 120 seconds of high fire operation. After this 60 seconds, the ICB then uses the call for the second stage of heat to control second stage operation of the GV.

When W1 is satisfied, both valves are closed.

Second stage of heating

When the ICB receives a call for the second stage of heating, W2, the ICB conducts a complete first stage ignition sequence. If this sequence is satisfied, the second main valve of the GV is opened.

When W2 is satisfied, the second main valve is closed.

Retry operation

When a flame is lost or is not detected during an attempt to achieve ignition, a retry operation occurs. A 30-second purge is performed between ignition attempts.

If the unit fails after three ignition attempts, the furnace is locked out for one hour. The furnace is monitored during this one-hour period for unsafe conditions.

Recycle operation

When a flame is lost after the flame stabilization period, a recycle operation occurs. If the unit fails after five recycle attempts, the furnace is locked out for one hour.

Gas heating operation errors

Lockout

A one-hour lockout occurs following three retries or five recycles. During the one-hour lockout, flame detection, limit conditions, and main valves are tested. Any improper results will cause the appropriate action to occur. Recycling the low voltage power cancels the lockout.

Temperature limit

If the UCB senses zero volts from the high temperature limit, the indoor blower motor is immediately energized. When the UCB again senses 24 volts from the temperature limit, the draft motor performs a 15-second post-purge and the indoor blower is de-energized following the elapse of the fan off delay for heating.

This limit is monitored regardless of unit operation status, that is, this limit is monitored at all times.

If the temperature limit opens three times within one hour, it locks on the indoor blower motor.

Flame sense

Flame sensing occurs at all times. If W1 is not present and a flame is sensed for 2 seconds, the draft motor is energized and the GV is kept off. The ICB halts any operation until a flame is not detected. Once the flame detection is lost, the ICB performs a post-purge. Normal operation is allowed concurrently with the purge. That is, this purge can be considered the purge associated with a call for W1.

If W1 is present, a flame is sensed but the GV is not energized and the draft motor is energized until the flame detection is lost. Normal operation is now allowed.

The flame detection circuitry continually tests itself. If the ICB finds the flame detection circuitry to be faulty, the ICB does not permit an ignition sequence and the draft motor is energized. If this failure occurs during an ignition cycle, the failure is counted as a recycle.

Gas valve

The UCB and ICB continuously monitor the GV.

If the ICB senses voltage at the GV when not requested, the ICB energizes the draft motor. The ICB does not operate the furnace until voltage is no longer sensed at the GV. The draft motor is stopped when voltage is not sensed at the GV.

Any time the UCB senses voltage at the GV without a call for heat for a continuous five-minute period, the UCB locks on the indoor blower. When voltage is no longer sensed at the GV, the UCB de-energizes the indoor blower following the elapse of the fan off delay for heating.

If voltage is sensed at the GV for at least 15 seconds during the fan on delay for heating and GV voltage or W1 is lost, the indoor blower is forced on for the length of the fan off delay for heating.

During a call for heat, if the UCB does not sense voltage at the GV for a continuous five-minute period, the UCB initiates a error message. The indoor blower motor is not locked on while there is no GV voltage.

Safety controls

The UCB monitors the temperature limit switch of gas heat units.

The control circuit includes the following safety controls:

Limit switch

The limit switch (LS) is located inside the gas heat compartment and is set to open at the temperature indicated in Table 11. It resets automatically. The limit switch operates when a high temperature condition, caused by inadequate supply air flow occurs. This shuts down the heater and energizes the blower.

Auxiliary Limit Switch (ALS)

This control is located inside the supply air compartment and is set to open at the temperature indicated in Table 29. It resets manually. The limit switch operates when a high temperature

condition, caused by inadequate supply air flow occurs. This shuts down the heater and energizes the blower.

The auxiliary limit switch (ALS) is wired in series with the limit switch. As such, the UCB cannot distinguish the auxiliary limit and the gas heat limit switch operation except the auxiliary is manual reset. Consequently, the control responds in the same manner as outlined in *Limit switch* on page 55.

Table 29: Gas heat limit control settings[1]

Unit		Main Limit Setting °F
Size	Opt.	
ZR078	N12	165
	N18	165
ZR090	N12	165
	N18	165
ZR102	N12	215
	N18	195
ZR120	N18	195
	N24	160
ZR150	N18	195
	N24	160

1. Roll-out = 300°F, Auxiliary Limit = 200°F.

The ICB monitors the pressure and roll-out switches of gas heat units.

The control circuit includes the following safety controls:

Pressure switch

When the draft motor has reached full speed and closes the pressure switch (PS) during a normal ignition sequence, if the pressure switch opens for 2 seconds, the GV is de-energized, the ignition cycle is aborted, and the ICB flashes the appropriate code. For information on the ignition control flash codes, see Table 34 on page 66. The draft motor is energized until the pressure switch closes or W1 is lost.

Roll-out switch

The roll-out switch (ROS) is wired in series with the pressure switch. As such, the ICB cannot distinguish the roll-out switch operation from that of the pressure switch.

Consequently, the control only responds in the same manner as outlined in *Pressure switch* on page 56. An open roll-out inhibits the gas valve from actuating.

Internal microprocessor failure

If the ICB detects an internal failure, it ceases all outputs, ignores inputs, and displays the proper flash code for control replacement. The ICB remains in this condition until it is replaced.

Flash codes

The ICB initiates a flash code associated with errors within the system, Table 34 on page 66.

Resets

Resets remove the call for heating by lowering the thermostat setting lower than the conditioned space temperature. This resets any flash codes.

Gas heat anticipator setpoints

The anticipator setpoint must be correct. Too high of a setting results in longer heat cycles and a greater temperature swing in the conditioned space. Reducing the value below the correct setpoint gives shorter ON cycles and may result in the lowering of the temperature within the conditioned space. See Table 30 for the required gas heat anticipator setting.

Table 30: Gas heat anticipator setpoints

Setting, amps	
W1	W2
0.65	0.1

Cooling start-up

Pre-start checklist

When the installation is complete, perform the following checks:

1. Check the electrical supply voltage being supplied. Verify that it is the same as the voltage listed on the unit nameplate.
2. Set the room thermostat to the off position.
3. Turn on electrical power to the unit.
4. Set the room thermostat fan switch to on.
5. Check the indoor blower rotation.
   - If the blower rotation is in the wrong direction, see *Phasing* on page 39.

   Check the blower drive belt tension.
6. Check the unit supply air (CFM).
7. Measure the evaporator fan motor's amp draw.
8. Set the room thermostat fan switch to off.
9. Turn off electrical power to the unit.

Operating the unit

1. Turn on electrical power to the unit.

Note: Before each cooling season, you must energize the crankcase heaters at least 10 hours before the system is put into operation.

2. Set the room thermostat setting lower than the room temperature.

   First stage compressors energize after the built-in time delay of five minutes.

   The second stage of the thermostat energizes the second stage compressor if needed.

Post-start checklist

1. Verify proper system pressures for both circuits.

2. Measure the temperature drop across the evaporator coil.

Gas heat start-up

Pre-start checklist

When the installation is complete, perform the following checks.

1. Check the type of gas supply. Verify that it is the same as the gas supply listed on the unit nameplate.
2. Verify that the vent outlet and combustion air inlet are free of any debris or obstruction.

Operating instructions

⚠ CAUTION

This furnace is equipped with an automatic re-ignition system. Do not attempt to manually light the pilot.

⚠ CAUTION

This furnace is equipped with an automatic re-ignition system. Do not attempt to manually light the pilot.

Lighting the main burners

1. Turn off electrical power to unit.
2. Set the room thermostat to lowest setting.
3. Turn the gas valve counter-clockwise to the ON position (see Figure 34).
4. Turn on electrical power to unit.

   If the set temperature on the thermostat is above room temperature, the main burners ignite. If a second stage of heat is called for, the main burners for second stage heat ignite for the second stage heat.

Post start checklist

After the entire control circuit has been energized and the heating section is operating, perform the following checks:

1. Check for gas leaks in the unit piping and the supply piping.

⚠ WARNING

Fire or explosion hazard

Failure to follow the safety warning exactly could result in serious injury, death or property damage.

Never test for gas leaks with an open flame. use a commercially available soap solution made specifically for the detection of leaks to check all connections. A fire or explosion may result causing property damage, personal injury or loss of life.

2. Check for the correct manifold gas pressures. See *Checking gas heat input* on page 57.
3. Check the supply gas pressure. It must be within the limits shown on the rating nameplate.

Note: You must check the supply pressure with all gas appliances in the building at full fire. The standby gas pressure must never exceed 10.5 in. or the operating pressure drop below 4.5 in. for natural gas units. If the gas pressure is outside these limits, contact the local gas utility or propane supplier for corrective action.

Shutting down the unit

1. Set the thermostat to the lowest temperature setting.
2. Turn off electrical power to unit.
3. Open the gas heat access panel.
4. Turn the gas valve clockwise to the OFF position (see Figure 34).

Checking gas heat input

This unit has two stages of gas heat. The first stage is 60% of the full fire input and is considered the minimum input for the furnace. The intended input for each furnace is shown in Table 32. The table applies to units operating on 60 Hz power only.

Determining the rate of gas flow (second stage)

1. Turn off all other gas appliances connected to the gas meter.
2. Turn on the furnace and verify that the thermostat is calling for second stage (100% input) heat.
3. Measure the time needed for one revolution of the hand on the smallest dial on the meter. A typical gas meter has a 1/2 or a 1 cubic foot test dial.
4. Using the number of seconds it takes for one revolution of the dial, calculate the cubic feet of gas consumed per hour (see page 58).
5. If necessary, adjust the high pressure regulator, see *Adjusting the manifold gas pressure* on page 58.

Note: Do not over-fire the furnace on second stage. If in doubt, it is better to leave the second stage of the furnace slightly under-fired.

6. Repeat Steps 1-5.

Determining the rate of gas flow (first stage)

1. Turn off all other gas appliances connected to the gas meter.
2. Turn on the furnace and make sure the thermostat is calling for first stage (60% input) heat.
3. Wait for the initial second stage period to complete and verify that the unit is in first stage.

   Even when the thermostat is calling for first stage heat, the unit lights on second stage and runs on second stage for 1 minute.

4. Measure the time needed for one revolution of the hand on the smallest dial on the meter. A typical gas meter has a 1/2 or a 1 cubic foot test dial.
5. Using the number of seconds it takes for one revolution of the dial, calculate the cubic feet of gas consumed per hour (see page 58).
6. If necessary, adjust the low pressure regulator, see *Adjusting the manifold gas pressure* on page 58.

Note: Do not under-fire the furnace on the first stage. If in doubt, it is better to leave the first stage of the furnace slightly over-fired (greater than 60% input).

7. Repeat Steps 1-6.

Table 31: Gas rate cubic feet per hour

Seconds for one rev.	Size of test dial	
	1/2 cu. ft.	1 cu. ft.
10	180	360
12	150	300
14	129	257
16	113	225
18	100	200
20	90	180
22	82	164
24	75	150
26	69	138
28	64	129
30	60	120
32	56	113
34	53	106
36	50	100
38	47	95
40	45	90
42	43	86
44	41	82
46	39	78
48	37	75
50	36	72
52	35	69
54	34	67
56	32	64
58	31	62
60	30	60

Calculating the cubic feet of gas consumed per hour

1. To find the BTU input, multiply the number of cubic feet of gas consumed per hour by the BTU content of the gas in your particular locality.

Note: The BTU content of gas varies widely from area to area, contact your gas company for this information.

By actual measurement, it takes 19 seconds for the hand on a 1 cubic foot dial to make a revolution with a 192,000 BTU/h furnace running.

2. To determine rotations per minute, divide 60 by 19 = 3.16.
3. To calculate rotations per hour, multiply 3.16 • 60 = 189.6.
4. Multiply 189.6 • 1 (0.5 if using a 1/2 cubic foot dial) = 189.6.
5. Multiply 78 • (the BTU rating of the gas). For this example, assume the gas has a BTU rating of 1050 BTU/ft.^{3}.

   The result of 199,000 BTU/h is within 5% of the 192,000 BTU/h rating of the furnace.

Adjusting the manifold gas pressure

This gas furnace has two heat stages. The gas valve has two adjustment screws located under a plastic protective cover. The second stage (100% input) adjustment screw is adjacent to the HI marking on the valve. The first stage (60% input) adjustment screw is located adjacent to the LO marking on the valve (see Figure 34).

Adjust the second stage (100% input) pressure first, then adjust first stage (60% input) pressure.

1. Turn off electrical power to the unit.
2. Using the outlet pressure port on the gas valve, connect a manometer to monitor the manifold pressure.
3. Remove the plastic cap that covers the HI and LO pressure adjustment screws.
4. Turn on electrical power to the unit.
5. Set the thermostat to call for second stage heat and start the furnace.
6. If necessary, use a screwdriver to turn the second stage adjustment screw clockwise to increase manifold pressure or counterclockwise to decrease manifold pressure.

Note: Do not over-fire the unit on second stage.

7. After you check the high manifold pressure, adjust the thermostat to call for first stage heat.
8. If necessary, use a screwdriver to turn the first stage adjustment screw clockwise to increase manifold pressure or counterclockwise to decrease manifold pressure.

Note: Do not under-fire the unit on first stage.

9. After you check the pressure, replace the plastic cap covering the HI and LO pressure adjustment screws.

NOTE: When using natural gas, the manifold pressure for second stage (100% input) is 3.5 IWG ± 0.3. The manifold pressure for first stage (60% input) when using natural gas is 1.5 IWG ± 0.3.

Table 32: Gas heat stages

No. of burner tubes	2nd stage input (100% BTU/h)	1st stage input (60% BTU/h)
4	120,000	72,000
6	180,000	108,000
8	240,000	144,000

Adjusting the temperature rise

The temperature rise is the difference of temperature between the return air and the heated air from the furnace. The temperature rise must lie within the range shown on the CSA rating plate and the data in Table 11.

1. After about 20 minutes of operation, determine the furnace temperature rise. Take readings of both the return air and the heated air in the ducts (about 6 feet from the furnace) where they are not affected by radiant heat.
2. After you determine the temperature rise, calculate the CFM according to the following formula.

$$\text{CFM} = \text{Btu Input} \cdot \frac{0.8}{(1.08 \cdot \Delta°\text{F})}$$

3. Increase the blower CFM to decrease the temperature rise. Decrease the blower CFM to increase the rise (see *Supply air drive adjustment* on page 48).

Note: Each gas heat exchanger size has a minimum allowable CFM. Below this CFM, the limit opens.

Inspecting and servicing burners and orifices

WARNING

Before you check or change burners, pilot, or orifices, close the main manuals shut-off valve and turn off all electrical power to the unit.

1. Open the union fitting just upstream of the unit gas valve and downstream from the main manual shut-off valve in the gas supply line.
2. Remove the screws that hold each end of the manifold to the manifold supports.
3. Disconnect the wiring to the gas valves and spark igniters.
4. Remove the manifold and gas valve assembly. Inspect the orifices and replace them if required.
5. To service the burners, remove the heat shield on top of the manifold supports. Inspect the burners and replace them if required.
6. Reverse the above procedure to replace the assemblies. Verify that burners are level and seated at the rear of the gas orifice.

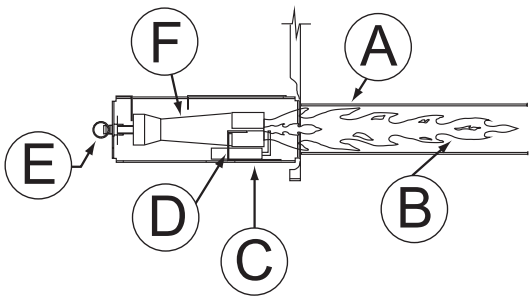

Item	Description
A	Heat exchanger tube
B	Burner flame (blue only)
C	Igniter
D	Burner bracket
E	Gas supply pipe
F	Burner

Figure 33: Typical flame

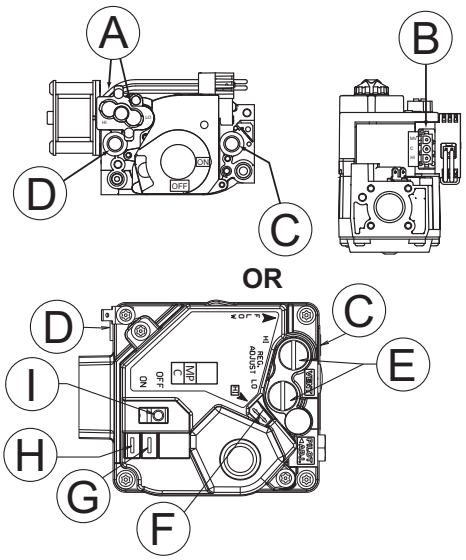

Item	Description
A	High and low gas adjustment
B	Mate-n-lock connectors
C	Outlet pressure tap
D	Inlet pressure tap
E	Regulator cover screws (reg. adj. beneath these screws)
F	HI terminal (2nd stage)
G	MP terminal (1st stage)
H	C terminal (common)
I	On/off switch

Figure 34: Typical gas valve

Charging the unit

All ZR units use thermal expansion devices. Charge the unit to nameplate charge.

Navigation components for the Smart Equipment™ control board

The following components are needed to access the control points in the Smart Equipment™ control. Installation and operation guides are available from your equipment dealer or distributor.

1. Local LCD on the unit control board.
2. Mobile Access Portal (MAP) Gateway (Portable).
   - Source 1 P/N S1-JC-MAP1810-OP
3. *MAP Gateway Quick Start Guide* P/N 24-10737-16
4. *MAP Gateway Instruction* P/N 24-10737-8

For more information on the Smart Equipment™ unit control board navigation, refer to the *Smart Equipment™ Quick Start Guide*.

NOTE: For more in-depth sequence of operation of the Smart Equipment™ control, refer to the *Smart Equipment™ Controls Sequence of Operation Overview* LIT-12011950.

Smart Equipment™ unit control board

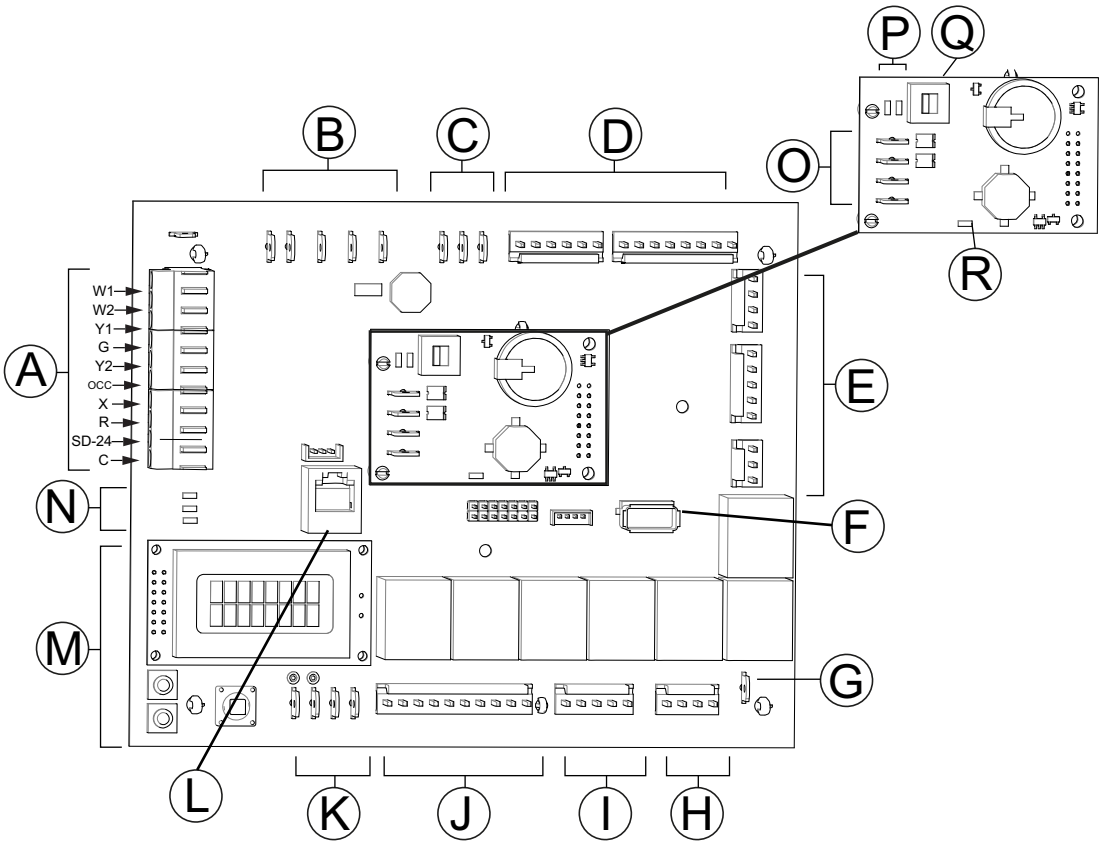

Figure 35: Unit control board

The following tables describe the details of the UCB, see Figure 35 for the connection locations.

Smart Equipment™ UCB - thermostat connection strip

Location	Label	Description	Function and comments
A	**W1**	1st stage heating request, 24 VAC input switched from R	Not effective for cooling-only units
	W2	2nd stage heating request, 24 VAC input switched from R	Not effective for cooling-only units or units with single-stage heat sections
	Y1	1st stage cooling request, 24 VAC input switched from R	
	Y2	2nd stage cooling request, 24 VAC input switched from R	Visible in the display menu when the #ClgStgs parameter is set for 2 or more, also effective for economizer free cooling supply air temperature reset when the #ClgStgs parameter is set for 1 or more
	G	Continuous indoor blower request, 24 VAC input switched from R	
	OCC	Occupancy request, 24 VAC input switched from R	Must have the OccMode parameter set for External to be effective
	X	Hard lockout indicator, 24 volt output to a light thermostat LED	
	R	24 VAC hot for thermostat switching and power	If field-added external accessories for unit shutdown are used, 24 VAC hot return from smoke detector, condensate overflow and/or user shutdown relay switching in series
	SD-24	If field-added external accessories for unit shutdown are used, 24 VAC hot out for smoke detector, condensate overflow and/or user shutdown relay switching in series	Unit wiring harness jumper plug for factory shutdown accessories must be removed if the switching of field-added external accessories for unit shutdown are wired between thermostat connection strip SD-24 and R
	C	24 VAC common for thermostat power	

Smart Equipment™ UCB - limit, 24 VAC power, and shutdown connections

Location	Label	Description	Function and comments
B	LIMIT	Monitored 24 VAC input through heat section limit switch(es)	If voltage is absent, indicating the heat section is over-temperature, the UCB will bring on the indoor blower
	C	24 VAC, 75 VA transformer Common referenced to cabinet ground	Connects through circuit traces to thermostat connection strip C and indoor blower VFD pin C
	24V	24 VAC, 75 VA transformer hot	Powers the UCB microprocessor, connects through circuit trace to the SD 24 terminal
	SD 24	24 VAC hot out for factory accessory smoke detector, condensate overflow and/or user shutdown relay switching in series	Connects through circuit trace to thermostat connection strip SD-24. A wiring harness jumper plug connecting SD 24 to SD R is in place if factory accessories for unit shutdown are not used - this jumper plug must be removed if the switching of field-added external accessories for unit shutdown are wired between thermostat connection strip SD-24 and R
	SD R	24 VAC hot return from factory accessory smoke detector, condensate overflow and user shutdown relay switching in series	Connects through circuit trace to the R terminal on the upper left of the board
	R	24 VAC hot for switched inputs to the UCB	Connects through circuit trace to the thermostat connection strip R terminal, right FAN OVR pin, right HPS1 pin, right HPS2 pin, lower DFS pin and lower APS pin

Smart Equipment™ UCB - space temperature sensor connections

Location	Label	Description	Function and comments
C	ST	Space Temperature sensor input from 10KΩ @ 77°F, Type III negative temperature coefficient thermistor	Positive of VDC circuit (3.625 VDC reading to COM with open circuit), effective if “Thermo- stat-only Control” parameter is set OFF, space sensor override momentary shorts ST to COM to initiate/terminate temporary occupancy
	COM	Common for ST and SSO inputs	Negative of VDC circuit for ST and SSO inputs
	SSO	Space Sensor Offset input from 0 to 20KΩ potentiometer	Positive of VDC circuit (3.625 VDC reading to COM with open circuit), 10KΩ/2.5 VDC is 0°F offset, 0Ω/0 VDC is maximum above offset and 20KΩ/3.4 VDC is maximum below offset from active space temperature setpoint

Smart Equipment™ UCB - temperature sensor connections

Location	Label	Description	Function and comments
D	SAT+	Supply Air Temperature sensor input from 10KΩ @ 77°F, Type III negative temperature coefficient thermistor	Input required for operation; 3.625 VDC reading SAT+ to SAT– with open circuit. Used in heat/cool staging cutouts, free cooling operation, demand ventilation operation, comfort ventilation operation, economizer loading operation, VAV cooling operation, hydronic heat operation.
	RAT+	Return Air Temperature sensor input from 10KΩ @ 77°F, Type III negative temperature coefficient thermistor	Input required for operation; 3.625 VDC reading RAT+ to RAT– with open circuit. Used in return air enthalpy calculation. Substitutes for space temperature if no other space temperature input is present.
	OAT+	Outside Air Temperature sensor input from 10KΩ @ 77°F, Type III negative temperature coefficient thermistor	Input required for operation but may be a communicated value; 3.625 VDC reading OAT+ to OAT– with open circuit. Used in heat/cool cutouts, low ambient cooling determination, dry bulb free cooling changeover, outside air enthalpy calculation, economizer loading operation, heat pump demand defrost calculation.
	CC1+	#1 refrigerant circuit Condenser Coil temperature sensor input from 10KΩ @ 77°F, Type III negative temperature coefficient thermistor	Input required for heat pump units, not required for A/C units; 3.625 VDC reading CC1+ to CC1– with open circuit. Used in heat pump demand defrost calculation.
	EC1+	#1 refrigerant circuit Evaporator Coil temperature sensor input from 10KΩ @ 77°F, Type III negative temperature coefficient thermistor	Input required for operation; 3.625 VDC reading EC1+ to EC1– with open circuit. Used in suction line temperature safety.

Smart Equipment™ UCB - temperature sensor connections (continued)

Location	Label	Description	Function and comments
D	CC2+	#2 refrigerant circuit Condenser Coil temperature sensor input from 10KΩ @ 77°F, Type III negative temperature coefficient thermistor	Input required for 2-compressor heat pump units, not required for 2-compressor A/C units, not active for 1-compressor units; 3.625 VDC reading CC2+ to CC2– with open circuit. Used in heat pump demand defrost calculation.
	EC2+	#2 refrigerant circuit Evaporator Coil temperature sensor input from 10KΩ @ 77°F, Type III negative temperature coefficient thermistor	Input required for operation of 2-compressor units, not active for 1-compressor units; 3.625 VDC reading EC2+ to EC2– with open circuit. Used in suction line temperature safety.

Smart Equipment™ UCB - pinned connections

Location	Label	Description	Function and comments
E	RAH+	Return Air Humidity input from 0-10 VDC @ 0-100% RH sensor	Input required for reheat units, optional in all other units, may be a communicated value. Used in return air enthalpy calculation, temperature/humidity setpoint reset, reheat operation.
	DCT PRS+	Supply Duct Pressure input from 0-5 VDC @ 0-5" w.c. sensor	Input required for variable air volume units. Used in VAV indoor blower operation.
	DFS (upper pin)	24 VAC hot return from Dirty Filter Switch	Optional input; switch closure for greater than 15 seconds during indoor blower operation initiates a notification alarm
	DFS (lower pin)	24 VAC hot out for Dirty Filter Switch	Connects through circuit trace to the R terminal
	APS (upper pin)	24 VAC hot return from Air Proving Switch	When this optional input is enabled: the air proving switch must close within 30 seconds of initiation of indoor blower operation and not open for greater than 10 seconds during indoor blower operation to allow heat/cool operation and prevent an "APS open" alarm; the air proving switch must open within 30 seconds of termination of indoor blower operation to prevent an "APS stuck closed" notification alarm
	APS (lower pin)	24 VAC hot out for Air Proving Switch	Connects through circuit trace to the R terminal
	C	Common for the VFD output	Negative of the VDC circuit for the VFD output
	VFD	2-10 VDC (0-100%) output for the indoor blower Variable Frequency Drive	Output is active with indoor blower operation. For CV units: this output provides stepped IntelliSpeed control of the indoor blower VFD based on fan-only, cooling stage and heating stage outputs. For VAV units: this output provides control of the indoor blower VFD based on supply duct static pressure input and setpoint.
	VFDFLT	24 VAC hot input from the normally open VFD alarm contact	The VFD alarm contact switches from R within the unit wiring harness. 24 VAC input results in unit shutdown and a "VFD fault" alarm

Smart Equipment™ UCB - USB connector

Location	Label	Description	Function and comments
F	J10	Type A female Universal Serial Bus connector	Used for backup, restoration, & copying of board parameters as well as board software updating through a flash drive
	J15	Factory wired SA Bus connector	

Smart Equipment™ UCB - 24 V terminal

Location	Label	Description	Function and comments
G	24V FOR OUTPUTS	24 VAC hot for H1, H2, CN-FAN, AUX HGR, FAN C1 and C2 output relay contact switching	Output relay circuitry is isolated from other UCB components and the 24 VAC hot source may be from a second transformer in the unit

Smart Equipment™ UCB - heat section connections

Location	Label	Description	Function and comments
H	H1	24 VAC hot output for heat section stage 1	Not effective for cooling-only units. Output if demand is present and permissions allow one stage or two stages of heat section operation
	H2	24 VAC hot output for heat section stage 2	Not effective for cooling-only units or units with single-stage heat sections. Output if demand is present and permissions allow two stages of heat section operation
	MV	24 VAC hot input confirming heat section operation	Sourced from gas valve in gas heat units or first stage heat contactor in electric heat units. Input within 5 minutes from initiation of H1 output initiates the “Heat On Fan Delay” timer, loss of input following the termination of H1 output initiates the “Heat On Fan Delay” timer, no input within 5 minutes from initiation of H1 output initiates an “Ignition Failure” alarm, input for longer than 5 minutes without H1 output initiates a “Gas Valve Mis-wire” alarm

Smart Equipment™ UCB - pin cooling and fan output

Location	Label	Description	Function and comments
I	CN-FAN	24 VAC hot output for the condenser fan contactor coil	Output with either C1 or C2 output; interrupted during defrost cycle for heat pump units
	AUX HGR	24 VAC hot output for hot gas reheat components	Effective only for reheat units, output with reheat operation
	FAN	24 VAC hot output for indoor blower contactor coil/ indoor blower VFD enable relay coil	Output with heat/cool operation, G input or schedule demand
	C1	24 VAC hot output for compressor 1	If demand is present and permissions allow compressor 1 operation; output with compressor cooling, comfort ventilation cooling, reheat or heat pump heating demands
	C2	24 VAC hot output for compressor 2	Not effective for one stage compressor UCBs. If demand is present and permissions allow compressor 2 operation; output with compressor cooling, comfort ventilation cooling or heat pump heating demands

Smart Equipment™ UCB - refrigerant circuit safety switch and indoor blower overload connections

Location	Label	Description	Function and comments
J	HPS1 (right pin)	24 VAC hot out for refrigerant circuit 1 High Pressure Switch	Connects through circuit trace to the R terminal
	HPS1 (left pin)	24 VAC hot return from refrigerant circuit 1 High Pressure Switch	Input is only considered if C1 output is needed; input must be present to allow C1 output. Three HPS1 trips in a two hour period cause a “High Pressure Switch 1 Lockout” and C1 output is then prevented until alarm reset. Connects through circuit trace to the right LPS1 pin.
	LPS1 (right pin)	24 VAC hot out for refrigerant circuit 1 Low Pressure Switch	Connects through circuit trace to the left HSP1 pin
	LPS1 (left pin)	24 VAC hot return from refrigerant circuit 1 Low Pressure Switch	Input is only considered after 30 seconds of C1 output; afterwards, input must be present to allow C1 output. Three LPS1 trips in a one hour period cause a “Low Pressure Switch 1 Lockout” and C1 output is then prevented until alarm reset.
	HPS2 (right pin)	24 VAC hot out for refrigerant circuit 2 High Pressure Switch	Not effective for one stage compressor UCBs. Connects through circuit trace to the R terminal
	HPS2 (left pin)	24 VAC hot return from refrigerant circuit 2 High Pressure Switch	Not effective for one stage compressor UCBs. Input is only considered if C2 output is needed; input must be present to allow C1 output. Three HPS2 trips in a two hour period cause a “High Pressure Switch 1 Lockout” and C2 output is then prevented until alarm reset. Connects through circuit trace to the right LPS2 pin.

Smart Equipment™ UCB - refrigerant circuit safety switch and indoor blower overload connections (continued)

Location	Label	Description	Function and comments
J	**LPS2 (right pin)**	24 VAC hot out for refrigerant circuit 2 Low Pressure Switch	Not effective for one stage compressor UCBs. Connects through circuit trace to the left HSP2 pin
	LPS2 (left pin)	24 VAC hot return from refrigerant circuit 2 Low Pressure Switch	Not effective for one stage compressor UCBs. Input is only considered after 30 seconds of C2 output; afterwards, input must be present to allow C2 output. Three LPS2 trips in a one hour period cause a “Low Pressure Switch 2 Lockout” and C2 output is then prevented until alarm reset.
	FAN OVR (right pin)	24 VAC hot out for indoor blower FAN Overload relay contact/motor protector switch	Connects through circuit trace to the R terminal
	FAN OVR (left pin)	24 VAC hot return from indoor blower FAN Overload relay contact/motor protector switch	Input is only considered if FAN output is needed; input must be present to allow FAN output and unit operation. One FAN OVR trip lasting longer than 5 minutes or three FAN OVR trips in a two hour period cause a “Fan Overload Lockout” and unit operation is then prevented until alarm reset.

Smart Equipment™ UCB - SA BUS[1] connections

Location	Label	Description	Function and comments
K	**PWR**	Power for SA (“Sensor-Actuator”) BUS devices	Also incorporated in the J8 6-pin phone jack connector at the left-center of the board. Positive of the 15 VDC (reading to C) circuit for powering an optional netstat and/or Multi Touch gateway
	C	Common for SA BUS power and communication circuits	Also incorporated in the J8 6-pin phone jack connector at the left-center of the board. Negative of the SA BUS circuits
	–	Communication for SA BUS devices	Also incorporated in the J8 6-pin phone jack connector at the left-center of the board. Positive of the VDC (typically, a fluctuating 1.5 to 3.5 volts reading to C; at least 0.25 volts lower than +) SA BUS communication circuit to optional economizer board, 4-stage board, fault detection & diagnostics board, netstat and/or Multi Touch gateway
	+	Communication for SA BUS devices	Also incorporated in the J8 6-pin phone jack connector at the left-center of the board. Positive of the VDC (typically, a fluctuating 1.5 to 3.5 volts reading to C; at least 0.25 volts higher than –) SA BUS communication circuit to optional economizer board, 4-stage board, fault detection & diagnostics board, netstat and/or Multi Touch gateway
L	**J8**	6-pin phone jack connector	Incorporates the SA BUS terminals for convenience/alternate connection of SA BUS devices, primarily used for temporary service connection of the Multi Touch gateway

1. When wiring unit and other devices using the SA Bus and FC Bus, see Table 32.

Smart Equipment™ UCB - user interface

Location	Label	Description	Function and comments
M	**Display**	On-board, 2-line x 8-character back-lit display	On-board display, buttons and joystick allow access to UCB, economizer, 4-stage and FDD board parameters
	ENTER	Button for display menu acknowledgment and navigation	
	CANCEL	Button for display menu navigation and zeroing of active compressor ASCD timer	
	JOY	4-way Joystick for display menu navigation	

Smart Equipment™ UCB - LEDs

Location	Label	Description	Function and comments
N	POWER	Green UCB power indicator	Lit indicates 24 VAC is present at C and 24V terminals
	FAULT	Red hard lockout, networking error and firmware error indicator	1/2 second on/off flashing indicates one or more alarm is currently active, 1/10th second on/off flashing indicates a networking error (polarity, addressing, etc.) or a firmware error (likely correctable with re-loading from USB flash drive)
	SA BUS	Green UCB SA bus communication transmission indicator	Lit/flickering indicates UCB SA bus communication is currently active, off indicates the UCB is awaiting SA bus communication

Smart Equipment™ UCB - optional communication sub-board

Location	Label	Description	Function and comments
O[1] Terminal FC BUS connections	FC+	FC (“Field Connected”) BUS BACnet MSTP communication	Positive of the VDC (typically, a fluctuating 1.5 to 3.5 volts reading to COM; at least 0.25 volts higher than –) FC bus BACnet MSTP communication circuit
	FC–	FC (“Field Connected”) BUS BACnet MSTP communication	Positive of the VDC (typically, a fluctuating 1.5 to 3.5 volts reading to COM; at least 0.25 volts lower than +) FC bus BACnet MSTP communication circuit
	COM	Common for the FC (“Field Connected”) BUS BACnet MSTP communication circuit	Negative of the VDC FC bus BACnet MSTP communication circuit
	SHLD	Shield for the FC (“Field Connected”) BUS BACnet MSTP communication circuit	Earth ground reference of the cable to prevent interference on the FC bus BACnet MSTP communication circuit
Q	EOL switch	End Of Line selector switch for the FC BUS BACnet MSTP communication circuit	ON selected only for the UCB that is the terminus of the FC bus BACnet MSTP communication cable to prevent signal “bounce-back”
P	EOL	Green End Of Line indicator	Lit indicates the EOL switch is selected ON
	FC BUS	Green FC bus communication transmission indicator	Lit/flickering indicates outgoing UCB FC bus communication is currently active, off indicates the UCB is awaiting incoming FC bus communication
R	ISO PWR	Green communication board Isolated Power indicator	Lit indicates the UCB is supplying power to the communication sub-board

Table 33: Cable for FC buses and SA buses in order of preference

Bus and cable type	Non-plenum applications		Plenum applications	
	Part number	O.D.	Part number	O.D.
FC Bus: 22 AWG Stranded, 3-Wire Twisted Shielded Cable[1]	Anixter: CBL-22/3-FC-PVC Belden®: B5501FE	0.138 in.	Anixter: CBL-22/3-FC-PLN Belden: B6501FE	0.140 in.
SA Bus (Terminal Block): 22 AWG Stranded, 4-Wire, 2 Twisted-Pair Shielded Cable	Anixter: CBL-22/2P-SA-PVC Belden: B5541FE	0.209 in.	Anixter: CBL-22/2P-SA-PLN Belden: B6541FE	0.206 in.
SA Bus (Modular Jack): 26 AWG Solid 6-Wire, 3 Twisted-Pair Cable[2]	—	—	Anixter preassembled: CBL-NETWORK25 CBL-NETWORK50 CBL-NETWORK75 CBL-NETWORK100	0.15 in.
FC Bus: 22 AWG Stranded, 3-Wire Twisted Non-Shielded Cable	Belden: B5501UE	0.135 in.	Belden: B6501UE	0.131 in.
SA Bus (Terminal Block): 22 AWG Stranded, 4-Wire, 2 Twisted-Pair Non-Shielded Cable	Belden: B5541UE	0.206 in.	Belden: B6541UE	0.199 in.

1. We strongly recommend 3-wire (for FC bus) and 4-wire, 2 twisted-pair (for SA bus), 22 AWG stranded, shielded cable. A 22 gauge cable offers the best performance for various baud rates, cable distances, and number of trunk devices primarily due to lower conductor-to-conductor capacitance. Shielded cable offers better overall electrical noise immunity than non-shielded cable. Observe the shield grounding requirements.
2. We recommend 26 AWG solid, 6-wire (3 twisted pairs) cable as the best fit for fabricating modular cables with the modular jack housing assembly. Be sure the cable you use fits the modular jack housing. The preassembled cables that are available from Anixter (Part No. CBL-NETWORKxxx) use 24 gauge wire.

Table 34: Ignition control flash codes

Flashes	Fault conditions	Check
Steady on	Control Failure	Control
Heartbeat	Normal Operation	
1	Not Applicable	
2	Pressure Switch Stuck Closed	Pressure Switch
3	Pressure Switch Failed To Close	Venter Pressure Switch Vent Blocked
4	Limit Switch Open	Main Limit AUX Limit
5	Flame Present With Gas Off First Stage Gas Valve Energized With W1 Off Second Stage Gas Valve Energized With First Stage Gas Valve Off	Gas Valve
6	Ignition Lockout	Gas Flow Gas Pressure Gas Valve Flame Sensor
Steady off	No Power Or Control Failure	24VAC or Control

Start-up sheet

START-UP & SERVICE DATA INSTRUCTION

COMMERCIAL PACKAGE UNITS

3.0 To 50.0 TONS

START-UP CHECKLIST

Date: _____

Job Name: _____

Customer Name: _____

Address: _____

City: _____ State: _____ Zip: _____

Model Number: _____ Serial Number: _____

Qualified Start-up Technician: _____ Signature: _____

HVAC Contractor: _____ Phone: _____

Address: _____

Contractor's E-mail Address: _____

Electrical Contractor: _____ Phone: _____

Distributor Name: _____ Phone: _____

WARRANTY STATEMENT

Johnson Controls/Ducted Systems is confident that this equipment will operate to the owner's satisfaction if the proper procedures are followed and checks are made at initial start-up. This confidence is supported by the 30 day dealer protection coverage portion of our standard warranty policy which states that Johnson Controls/ Ducted Systems will cover parts and labor on new equipment start-up failures that are caused by a defect in factory workmanship or material, for a period of 30 days from installation. Refer to the current standard warranty policy and warranty manual for details.

In the event that communication with Johnson Controls/Ducted Systems is required regarding technical and/or warranty concerns, all parties to the discussion should have a copy of the equipment start-up sheet for reference. A copy of the original start-up sheet should be filed with the Technical Services Department.

The packaged unit is available in constant or variable air volume versions with a large variety of custom options and accessories available. Therefore, some variation in the startup procedure will exist depending upon the products capacity, control system, options and accessories installed.

This start-up sheet covers all startup check points common to all package equipment. In addition it covers essential startup check points for a number of common installation options. Depending upon the particular unit being started not all sections of this startup sheet will apply. Complete those sections applicable and use the notes section to record any additional information pertinent to your particular installation.

Warranty claims are to be made through the distributor from whom the equipment was purchased.

EQUIPMENT STARTUP

Use the local LCD or Mobile Access Portal (MAP) Gateway to complete the start-up.

A copy of the completed start-up sheet should be kept on file by the distributor providing the equipment and a copy sent to:

Johnson Controls/Ducted Systems
Technical Services Department
5005 York Drive
Norman, OK 73069

1034349-UCL-F-0318

SAFETY WARNINGS

The inspections and recording of data outlined in this procedure are required for start-up of Johnson Controls/Ducted Systems' packaged products. Industry recognized safety standards and practices must be observed at all times. General industry knowledge and experience are required to assure technician safety. It is the responsibility of the technician to assess all potential dangers and take all steps warranted to perform the work in a safe manner. By addressing those potential dangers, prior to beginning any work, the technician can perform the work in a safe manner with minimal risk of injury.

⚠WARNING

Lethal voltages are present during some start-up checks. Extreme caution must be used at all times.

⚠WARNING

Moving parts may be exposed during some startup checks. Extreme caution must be used at all times.

NOTE: Read and review this entire document before beginning any of the startup procedures.

DESIGN APPLICATION INFORMATION

This information will be available from the specifying engineer who selected the equipment. If the system is a VAV system the CFM will be the airflow when the remote VAV boxes are in the full open position and the frequency drive is operating at 60 HZ. **Do not proceed with the equipment start-up without the design CFM information.**

Design Supply Air CFM: _____ Design Return Air CFM:_____

Design Outdoor Air CFM At Minimum Position: _____

Total External Static Pressure: _____

Supply Static Pressure: _____

Return Static Pressure: _____

Design Building Static Pressure: _____

Outside Air Dilution: Economizer Position Percentage: _____ CFM: _____

Supply Gas Pressure After Regulator W/o Heat Active _____ Inches_____

ADDITIONAL APPLICATION NOTES FROM SPECIFYING ENGINEER:

REFERENCE

General Inspection	Completed	See Notes
Unit inspected for shipping, storage, or rigging damage	☐	☐
Unit installed with proper clearances	☐	☐
Unit installed within slope limitations	☐	☐
Refrigeration system checked for gross leaks (presence of oil)	☐	☐
Terminal screws and wiring connections checked for tightness	☐	☐
Filters installed correctly and clean	☐	☐
Economizer hoods installed in operating position	☐	☐
Condensate drain trapped properly, refer to Installation Manual	☐	☐
Economizer damper linkage tight	☐	☐
Gas Heat vent hood installed	☐	☐
All field wiring (power and control) complete	☐	☐

Air Moving Inspection	Completed	See Notes
Alignment of drive components	☐	☐
Belt tension adjusted properly	☐	☐
Blower pulleys tight on shaft, bearing set screws tight, wheel tight to shaft	☐	☐
Pressure switch or transducer tubing installed properly	☐	☐

Exhaust Inspection Powered ☐ Barometric Relief ☐	Completed	See Notes
Check hub for tightness	☐	☐
Check fan blade for clearance	☐	☐
Check for proper rotation	☐	☐
Check for proper mounting (screen faces towards unit)	☐	☐
Prove operation by increasing minimum setting on economizer	☐	☐

Economizer Inspection Standard ☐ BAS ☐	Completed	See Notes
CO_2 sensor installed Yes ☐ No ☐	☐	☐
Check economizer setting (Reference Smart Equipment™ Control Board LCD menu location)	☐	☐
Prove economizer open/close through Smart Equipment™ Board Setting	☐	☐

Reheat Mode Normal ☐ or Alternate ☐ Not Applicable ☐
Humidity Sensor (2SH0401) _____

Operating Measurements - Air Flow

Fan operates with proper rotation (All VFD equipped units with the optional Manual Bypass must be phased for correct blower rotation with the Bypass switch set in the LINE position) ID Fans ☐ Exh. Fans ☐ Cond. Fans ☐	
Pressure drop across dry evaporator coil (At maximum design CFM) [1]	IWC
External Static Pressure	IWC
Return Static Pressure	IWC
Supply Static Pressure	IWC
Supply Air CFM Using Dry Coil Chart	CFM
Final Adjusted Supply Air CFM[2]	CFM

1. Consult the proper airflow to pressure drop table to obtain the actual airflow at the measured pressure differential.
2. Was a motor pulley adjustment or change required to obtain the correct airflow?
   Was it necessary to increase of decrease the airflow to meet the design conditions?
   If the motor pulley size was changed, measure the outside diameters of the motor and blower pulleys and record those diameters here;

Blower Motor HP _____FLA_____ RPM_____

Pulley Pitch Diameter _____Turns Out_____ Final Turns Out_____

Blower Pulley Pitch Diameter _____ Fixed Sheave_____

ELECTRICAL DATA

T1 - T2 _____ Volts T2 - T3 _____ Volts

Control Voltage _____ Volts T1 - T3 _____ Volts

Device	Nameplate	Measured List All Three Amperages
Supply Fan Motor[1, 2]	AMPS	AMPS
Exhaust Motor (Dampers 100%)	AMPS	AMPS
Condenser Fan #1	AMPS	AMPS
Condenser Fan #2 (if equipped)	AMPS	AMPS
Condenser Fan #3 (if equipped)	AMPS	AMPS
Condenser Fan #4 (if equipped)	AMPS	AMPS
Compressor #1	AMPS	AMPS
Compressor #2 (if equipped)	AMPS	AMPS
Compressor #3 (if equipped)	AMPS	AMPS
Compressor #4 (if equipped)	AMPS	AMPS

1. VAV units with heat section - simulate heat call to drive VAV boxes and VFD/IGV to maximum design airflow position.
2. VAV units without heat section - VAV boxes must be set to maximum design airflow position.

1034349-UCL-F-0318

OPERATING MEASUREMENTS - COOLING

Stage	Discharge Pressure	Discharge Temp.	Liquid Line Temp.[1]	Subcooling[2]	Suction Pressure	Suction Temp.	Superheat
First	#	°	°	°	#	°	°
Second (if equipped)	#	°	°	°	#	°	°
Third (if equipped)	#	°	°	°	#	°	°
Fourth (if equipped)	#	°	°	°	#	°	°
Reheat 1st Stage	#	°	°	°	#	°	°

1. Liquid temperature should be taken before filter/drier.
2. Subtract 10 psi from discharge pressure for estimated liquid line pressure

Outside air temperature	_____	°F db	_____	°F wb	_____	%RH
Return Air Temperature	_____	°F db	_____	°F wb	_____	%RH
Mixed Air Temperature	_____	°F db	_____	°F wb	_____	%RH
Supply Air Temperature	_____	°F db	_____	°F wb	_____	%RH

REFRIGERANT SAFETIES

Action	Completed	See Notes
Prove Compressor Rotation (3 phase only) by gauge pressure	☐	☐
Prove High Pressure Safety, All Systems	☐	☐
Prove Low Pressure Safety, All Systems	☐	☐

OPERATING MEASUREMENTS - GAS HEATING

Fuel Type: ☐ Natural Gas ☐ LP Gas

Action		Completed	See Notes
Check for gas leaks		☐	☐
Prove Ventor Motor Operation		☐	☐
Prove Primary Safety Operation		☐	☐
Prove Auxiliary Safety Operation		☐	☐
Prove Rollout Switch Operation		☐	☐
Prove Smoke Detector Operation		☐	☐
Manifold Pressure	Stage 1	IWC	☐
	Stage 2 (If Equipped)	IWC	☐
	Stage 3 (If Equipped)	IWC	☐
Supply gas pressure at full fire		IWC	☐
Check temperature rise[1]	☐ measured at full fire	°F	☐

1. $\frac{\text{Input X Eff. (BTU output)}}{\text{1.08 X Temp. Rise}}$

Ducted Systems

OPERATIONAL MEASUREMENTS - STAGING CONTROLS

Verify Proper Operation of Heating/Cooling Staging Controls	
Create a cooling demand at the Thermostat, BAS System or Smart Equipment™ Verify that cooling/economizer stages are energized.	☐
Create a heating demand at the Thermostat, BAS System or Smart Equipment™ Verify that heating stages are energized.	☐
Verify Proper Operation of the Variable Frequency Drive (If Required)	
Verify that motor speed modulates with duct pressure change.	☐

FINAL - INSPECTION

Verify that all operational control set points have been set to desired value Scroll through all setpoints and change as may be necessary to suit the occupant requirements.	☐
Verify that all option parameters are correct Scroll through all option parameters and ensure that all installed options are enabled in the software and all others are disabled in the software. (Factory software settings should match the installed options)	☐
Verify that all access panels have been closed and secured	☐
Save a backup file from the unit control board onto a USB flash drive.	☐

OBSERVED PRODUCT DEFICIENCIES & CONCERNS:

Subject to change without notice. Printed in U.S.A.
Copyright © 2020 by Johnson Controls, Inc. All rights reserved.

6021981-UIM-A-1120

York International Corporation
5005 York Drive
Norman, OK 73069