Coleman Technical Guide: LX Series TCE2B Models - 14.3 SEER2 Split-System Air Conditioner - Single-Phase

York International Corporation, 5005
York Drive, Norman, OK 73069

6260579-CTG-C-0823

Supersedes: 6260579-CTG-B-0223

2023-08-02

Contents

Description....7
Certification....7
Warranty summary....7
Features....8
Nomenclature....9
Physical and electrical data....9
Physical and electrical data notes....10
Illustration of dimensions....11
Dimensions....11
Dimensions data notes....11
System charge N-coil....12
System charge N-coil data notes....12
System charge A-coil....13
System charge A-coil data notes....13
Charging....14
Air handler capacity....14
Air handler capacity data notes....20
Coil only capacity....20
Coil only capacity data notes....21
Furnace capacity - 1.5 ton....21
Furnace capacity - 2 ton....26
Furnace capacity - 2.5 ton....32
Furnace capacity - 3 ton....42
Furnace capacity - 3.5 ton....51
Furnace capacity - 4 ton....61
Furnace capacity - 5 ton....70
Furnace capacity data notes....75
Applications and accessories....76
Sound power rating....77
Mechanical specifications....77
Typical installation....79
Typical field wiring....80
Alternative installation clearances....81
Performance data - 1.5 ton....81
Condenser only performance data - 1.5 ton....81
Condenser only performance data notes....81
Cooling performance data - 1.5 ton....82
Cooling performance data notes....82
Multipliers for determining the performance with other indoor sections....82

Cool multiplier airhandler - 1.5 ton.... 82
Cool multiplier furnace - 1.5 ton.... 83
Performance data - 2 ton.... 90
Condenser only performance data - 2 ton.... 90
Condenser only performance data notes.... 90
Cooling performance data - 2 ton.... 90
Cooling performance data notes.... 91
Multipliers for determining the performance with other indoor sections.... 91
Cool multiplier airhandler - 2 ton.... 91
Cool multiplier furnace - 2 ton.... 92
Performance data - 2.5 ton.... 100
Condenser only performance data - 2.5 ton.... 100
Condenser only performance data notes.... 100
Cooling performance data - 2.5 ton.... 100
Cooling performance data notes.... 101
Multipliers for determining the performance with other indoor sections.... 101
Cool multiplier airhandler - 2.5 ton.... 101
Cool multiplier furnace - 2.5 ton.... 102
Performance data - 3 ton.... 115
Condenser only performance data - 3 ton.... 115
Condenser only performance data notes.... 115
Cooling performance data - 3 ton.... 115
Cooling performance data notes.... 116
Multipliers for determining the performance with other indoor sections.... 116
Cool multiplier airhandler - 3 ton.... 116
Cool multiplier furnace - 3 ton.... 117
Performance data - 3.5 ton.... 128
Condenser only performance data - 3.5 ton.... 128
Condenser only performance data notes.... 128
Cooling performance data - 3.5 ton.... 128
Cooling performance data notes.... 129
Multipliers for determining the performance with other indoor sections.... 129
Cool multiplier airhandler - 3.5 ton.... 129
Cool multiplier furnace - 3.5 ton.... 130
Performance data - 4 ton.... 142
Condenser only performance data - 4 ton.... 142
Condenser only performance data notes.... 142
Cooling performance data - 4 ton.... 142
Cooling performance data notes.... 143
Multipliers for determining the performance with other indoor sections.... 143
Cool multiplier airhandler - 4 ton.... 143
Cool multiplier furnace - 4 ton.... 144

Performance data - 5 ton..... 157
Condenser only performance data - 5 ton..... 157
Condenser only performance data notes..... 157
Cooling performance data - 5 ton..... 157
Cooling performance data notes..... 158
Multipliers for determining the performance with other indoor sections.....158
Cool multiplier airhandler - 5 ton..... 158
Cool multiplier furnace - 5 ton..... 159

Description

The TCE2B models are part of our successful 14.3 SEER2 Regional Minimum Efficiency in the Southern US. These outdoor units are specifically designed to be matched with our residential indoor coils, furnaces, and air handlers to provide a complete system solution.

Figure 1: Installation map

Due to continuous product improvement, specifications are subject to change without notice.

Visit us on the web at www.simplygettingthejobdone.com and www.colemanac.com. Additional rating information can be found at www.ahridirectory.org.

This document is only for distribution use - it is not to be used at point of retail sale.

Certification

Assembled at a facility with an ISO 9001:2015-certified Quality Management System

Warranty summary

Standard 5-year limited parts warranty.

Standard 10-year limited compressor warranty.

Extended 10-year limited parts warranty when product is registered online within 90 days of purchase for replacement or closing for new home construction.

The warranty does not apply to R-22 models, three-phase models, or internet sales.

See the limited warranty certificate in the *User's Information Manual* for details.

Features

- **Small footprint** - Minimum footprint for easier handling, transportation, and installation.
- **Easier installation** - Independent panels provide quick access for unit setup. Installation time is reduced by easy power and control wiring access. Select indoor matches with factory-mounted TXVs are available for quicker system installation. The filter-drier is shipped loose for installation in the field. The unit is factory-charged for 15 ft refrigeration piping. The small base dimension and reduced unit clearances make for easier retrofits.
- **Accessible information** - QR code on unit provides quick access to technical documents and warranty information.
- **Durable finish** - The coated steel wire fan guard, coated external fasteners, and pre-treated G90-equivalent galvanized steel chassis components resist corrosion and rust creep. Champagne colored powdercoat paint further protects external panels.
- **Quality coils** - The high efficiency microchannel aluminum coil is manufactured using an improved material system, providing reliable performance and small unit size.
- **Rugged coil protection** - Coils are protected from mechanical damage by a proven stamped steel coil guard design.
- **Protected compressor** - Compressors are protected internally by a high-pressure relief valve and a temperature sensor, and externally by the system high-pressure switch.
- **Reliable operation** - Ball bearing fan motors provide superior performance in extreme temperatures.
- **Environmentally friendly** - CFC-free R-410A refrigerant delivers environmentally friendly performance with zero ozone depletion.
- **Top discharge** - Warm air is blown up, away from the structure and any landscaping, allowing compact location on multi-unit applications.
- **Low operating sound levels** - Developed using CFD and FEA tools, the sturdy cabinet and top design provides sound performance of 76 dBA or lower. Compatible accessories for further sound reduction are also available.
- **Better service access** - Diagonal base valves with open access for low-loss fittings, single panel access to the electrical controls, swing out control box for full corner access, and removable fan guard allow easy access for unit maintenance.
- **Agency listed** - Safety certified by CSA to UL 1995/CSA 22.2. Performance certified to ANSI/AHRI Standard 210/240 in accordance with the Unitary Small Equipment certification program.

Nomenclature

Table 1: Nomenclature

Brand	**T**	**T** = As manufactured
Product type	**C**	**C** = Air conditioner
Nominal series efficiency and staging	**E2**	**E2** = 14.3 (SEER2 - South)
Refrigerant	**B**	**B** = R-410A
Nominal unit capacity (MBH)	**18**	**18** = 1.5 ton
		24 = 2 ton
		30 = 2.5 ton
		36 = 3 ton
		42 = 3.5 ton
		48 = 4 ton
		60 = 5 ton
Staging	**S**	**S** = 1-stage **T** = 2-stage **M** = modulating **V** = variable capacity
Voltage (voltage-phase-frequency)	**2**	**2** = 208/230-1-60
Generation (major revision)	**1**	**1** = First generation
		2 = Second generation
Factory option	**S**	**S** = Standard (no options)
Style letter (minor revision) not used for ordering	**A**	**A** = Style A
		B = Style B

Physical and electrical data

Table 2: Physical and electrical data

Outdoor unit model	TCE2B18S21S	TCE2B24S21S	TCE2B30S21S	TCE2B36S21S	TCE2B42S21S	TCE2B48S21S	TCE2B60S21S
Unit supply voltage	208/230 V, 1 phase, 60 Hz	208/230 V, 1 phase, 60 Hz	208/230 V, 1 phase, 60 Hz	208/230 V, 1 phase, 60 Hz	208/230 V, 1 phase, 60 Hz	208/230 V, 1 phase, 60 Hz	208/230 V, 1 phase, 60 Hz
Normal voltage range[1]	187—252	187—252	187—252	187—252	187—252	187—252	187—252
Minimum circuit ampacity	11.8	15.1	15.3	17.6	23.4	24.0	30.9
Maximum overcurrent device (A)[2]	20	25	25	30	40	40	50
Minimum overcurrent device (A)[3]	15	20	20	20	25	25	35
Compressor type[4]	Scroll	Scroll	Scroll	Scroll	Scroll	Scroll	Scroll
Compressor rated load	9.0	11.5	11.7	13.1	17.7	18.2	23.9

Table 2: Physical and electrical data

Outdoor unit model	TCE2B18S21S	TCE2B24S21S	TCE2B30S21S	TCE2B36S21S	TCE2B42S21S	TCE2B48S21S	TCE2B60S21S
Compressor locked rotor	42.6	59.5	71.3	83.1	110.2	102.4	124.5
Crankcase heater	No	No	No	No	No	No	No
Factory external discharge muffler	No	No	No	No	No	No	No
HS kit required with TXV	No	No	No	No	No	No	No
HS kit part number (S1-2SA067*****)[5]	10106	10106	10106	10106	10106	10106	10106
Fan diameter (in.)	22	22	22	24	24	24	26
Fan motor rated HP	1/12	1/8	1/8	1/4	1/4	1/4	1/4
Fan motor rated load (A)	0.64	0.70	0.70	1.30	1.30	1.30	1.05
Fan motor nominal RPM	1000	1075	1075	850	850	850	850
Fan motor nominal CFM	2675	2875	2875	3500	3500	3500	4300
Coil face area (sq. ft.)	13.83	13.83	17.37	18.74	21.06	18.70	23.40
Coil rows deep	1	1	1	1	1	1	1
Coil fins per inch	23	23	23	23	23	23	23
Liquid refrigeration piping outdoor unit (field installed)	3/8	3/8	3/8	3/8	3/8	3/8	3/8
Vapor refrigeration piping outdoor unit (field installed)[6]	3/4	3/4	3/4	3/4	7/8	7/8	1 1/8‡
Unit charge (lb-oz)[7]	3-7	3-3	3-13	4-5	5-1	4-13	5-11
Charge (oz/ft)	0.62	0.62	0.62	0.62	0.67	0.67	0.75
Operating weight (lb)	150	150	165	185	215	210	230

Physical and electrical data notes

1. Rated in accordance with AHRI Standard 110-2012, utilization range A.
2. Dual element fuses or HACR circuit breaker. Maximum allowable overcurrent protection.
3. Dual element fuses or HACR circuit breaker. Minimum recommended overcurrent protection.
4. Rotary compressor models are limited to an equivalent length of refrigeration piping of 100 ft with no exceptions.

5. Refer to the *Hard Start Kit Accessory Installation Manual* for the hard start kit part number for each model. The hard start kit is a field installed accessory.
6. For applications with non-standard vapor line sizes, refer to the *Applications and accessories* section.
7. The unit charge is correct for the outdoor unit, smallest matched indoor unit, and 15 ft of refrigerant tubing. For tubing lengths other than 15 ft, add or subtract the amount of refrigerant, using the difference in actual refrigeration piping length (not the equivalent length) multiplied by the per foot value.

   ‡ The adapter fitting must be field installed for the required 1 1/8 in. refrigeration piping.

Illustration of dimensions

Figure 2: Unit dimensions

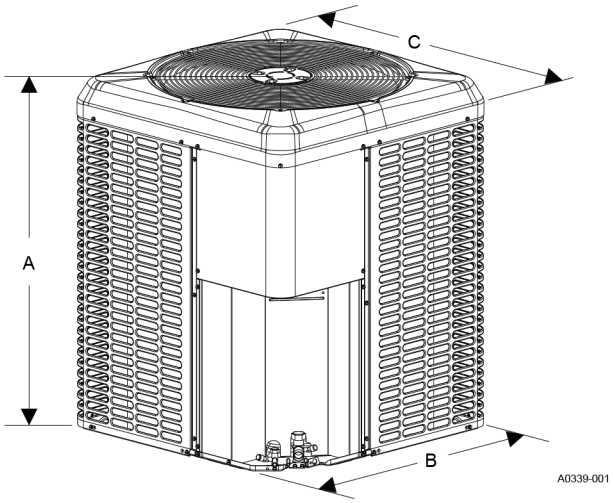

Dimensions

Table 3: Dimensions

Outdoor unit model	Dimensions (in.)			Refrigerant connection service valve size	
	A	B	C	Liquid	Vapor
TCE2B18S21S	30	29 1/4	29 1/4	3/8	3/4
TCE2B24S21S	30	29 1/4	29 1/4		
TCE2B30S21S	36 1/4	29 1/4	29 1/4		
TCE2B36S21S	33 1/4	35 1/4	31 3/4		
TCE2B42S21S	36 1/4	35 1/4	31 3/4		7/8
TCE2B48S21S	33 1/4	35 1/4	31 3/4		
TCE2B60S21S	36 1/4	38	34 1/4		7/8‡

Dimensions data notes

- ‡ The adapter fitting must be field installed for the required 1 1/8 in. refrigeration piping.
- All dimensions are in inches and are subject to change without notice.
- The overall height is from the bottom of the base pan to the top of the fan guard.
- The overall length and width include screw heads.

System charge N-coil

Table 4: System charge N-coil

Outdoor unit model	TCE2B18S21S	TCE2B24S21S	TCE2B30S21S	TCE2B36S21S	TCE2B42S21S	TCE2B48S21S	TCE2B60S21S
Required indoor metering device[1,2]	BA1	BA1	BA1	BC1	BC1	BC1	BC1
Indoor coil model[3,4,5]	Additional charge (oz)						
AE18B	—	—	—	—	—	—	—
AE24B	—	—	—	—	—	—	—
AE30B	4	4	0	—	—	—	—
AE36B	—	—	2	—	—	—	—
AE36C	—	—	2	—	—	—	—
AE42C	—	—	—	—	2	—	—
AE48C	—	—	—	—	2	0	—
AE48D	—	—	—	—	2	0	—
AE60C	—	—	—	—	—	2	0
AE60D	—	—	—	—	—	—	20
AVC18B	—	—	—	—	—	—	—
AVC24B	—	—	—	—	—	—	—
AVC30B	4	4	0	—	—	—	—
AVC36B	—	—	2	—	—	—	—
AVC36C	—	—	2	—	—	—	—
AVC42C	—	—	—	—	2	—	—
AVC48C	—	—	—	—	2	0	—
AVC48D	—	—	—	—	2	0	—
AVC60C	—	—	—	—	—	2	0
AVC60D	—	—	—	—	—	—	20
CF/CM/CU18(A,B)	—	—	—	—	—	—	—
CF/CM/CU24(A,B)	—	—	—	—	—	—	—
CF/CM/CU30(A,C)	4	4	0	—	—	—	—
CF/CM/CU30B	4	4	0	—	—	—	—
CF/CM/CU36B	—	—	2	—	—	—	—
CF/CM36C	—	—	2	—	—	—	—
CF42B	—	—	—	2	—	—	—
CF/CM42C	—	—	—	2	0	—	—
CF/CM48(C,D)	—	—	—	—	2	0	—
CF/CM60(C,D)	—	—	—	—	—	2	0
CF/CM64D	—	—	—	—	—	—	20
Some of the combinations shown in the above *System Charge* table require Advanced Main Air Circulating Fan indoor product. For approved coil only matches, please see the *Coil only capacity* table.							

System charge N-coil data notes

1. For applications requiring a TXV, use S1-1TVM*** series kit.
2. A TXV kit must be used with these indoor units to obtain system performance.
3. Systems matched with furnaces or air handlers not equipped with blower-off delays may require blower time delay.
4. Do not use CF coils in horizontal applications.
5. Charge adders shown above do not indicate that coils are rated for every application. Refer to the performance data tables for actual performance for specified system matches. Obtain certified system ratings from http://www.ahridirectory.org.

System charge A-coil

Table 5: System charge A-coil

Outdoor unit model	TCE2B18S21S	TCE2B24S21S	TCE2B30S21S	TCE2B36S21S	TCE2B42S21S	TCE2B48S21S	TCE2B60S21S
Required indoor metering device[1,2]	**BA1**	**BA1**	**BA1**	**BC1**	**BC1**	**BC1**	**BC1**
Indoor coil model[3,4,5]	**Additional charge (oz)**						
JHETB18B	0	—	—	—	—	—	—
JHETB24C	3	3	—	—	—	—	—
JHETB30D	—	—	6	—	—	—	—
JHETB36D	—	—	6	0	—	—	—
JHETC36D	—	—	6	0	—	—	—
JHETC42F	—	—	—	—	2	—	—
JHETC48G	—	—	—	—	—	5	—
JHETD48G	—	—	—	—	—	5	—
JHETC60H	—	—	—	—	—	—	6
JHETD60H	—	—	—	—	—	—	6
JHVTB18B	0	—	—	—	—	—	—
JHVTB24C	3	3	—	—	—	—	—
JHVTB36D	—	—	6	0	—	—	—
JHVTC36D	—	—	6	0	—	—	—
JHVTC42F	—	—	—	—	2	—	—
JHVTD42F	—	—	—	—	2	—	—
JHVTC48G	—	—	—	—	—	5	—
JHVTD48G	—	—	—	—	—	5	—
JHVTC60H	—	—	—	—	—	—	6
JHVTD60H	—	—	—	—	—	—	6
XAF/XAU/XAHA18A	—	—	—	—	—	—	—
XAFB18A	—	—	—	—	—	—	—
XAF/XAU/XAHA24B	0	0	—	—	—	—	—
XAF/XAHB24B	0	0	—	—	—	—	—
XAFA30D	—	—	6	—	—	—	—
XAF/XAU/XAHB30C	3	3	0	—	—	—	—
XAF/XAHC30C	3	3	0	—	—	—	—
XAF/XAU/XAHB36D	—	—	6	0	—	—	—
XAFB36E	—	—	—	2	—	—	—
XAF/XAHC36D	—	—	6	0	—	—	—
XAF/XAU/XAHC42E	—	—	—	2	0	—	—
XAF/XAHD42E	—	—	—	2	0	—	—
XAF/XAU/XAHC48F	—	—	—	—	2	0	—
XAF/XAHD48F	—	—	—	—	2	0	—
XAF/XAU/XAHC60G	—	—	—	—	—	5	0
XAF/XAU/XAHD60G	—	—	—	—	—	5	0
XAF/XAHC60H	—	—	—	—	—	—	6
XAF/XAU/XAHD60H	—	—	—	—	—	—	6
Some of the combinations shown in the above *System Charge* table require Advanced Main Air Circulating Fan indoor product. For approved coil only matches, please see the *Coil only capacity* table.							

System charge A-coil data notes

1. For applications requiring a TXV, use S1-1TVM*** series kit.

2. A TXV kit must be used with these indoor units to obtain system performance.
3. Systems matched with furnaces or air handlers not equipped with blower-off delays may require blower time delay.
4. Do not use XAF/XAU coils in horizontal applications. Do not use XAH coils in upflow/downflow applications.
5. Charge adders shown above do not indicate that coils are rated for every application. Refer to the *Performance data tables* for actual performance for specified system matches. Obtain certified system ratings from http://www.ahridirectory.org.

Charging

1. Check the factory unit charge listed on the unit nameplate to verify the refrigerant charge for the outdoor unit, the smallest matched indoor unit, and the 15 ft of interconnecting refrigeration piping.
2. Verify the indoor metering device and additional charge required for the specific matched indoor unit in the system using Table 4 or Table 5.
3. Add additional charge for the amount of interconnecting refrigeration piping greater than 15 ft at the rate specified in Table 2.
4. For installations requiring additional charge, weigh in refrigerant for the specific matching indoor unit and actual refrigeration piping length.
5. After weighing in the charge adders for the matched indoor unit and refrigeration piping, verify the system operation against the temperatures and pressures in the charging chart for the outdoor unit. Locate the charging charts on the outdoor unit and in the *Service Data Application Guide* on www.simplygettingthejobdone.com. Follow the subcool or superheat charging procedure in the *Installation Manual* according to the type of indoor metering device in the system, and allow 10 min after each charge adjustment for the system operation to stabilize. Record the charge adjustment made to match the charging chart.
6. Permanently stamp the unit nameplate with the total system charge defined as follows: total system charge = base charge (as shipped) + charge adder for matched indoor unit + charge adder for actual refrigeration piping length + charge adjustments to match the charging chart.

Air handler capacity

Table 6: Air handler capacity

Outdoor unit model	Air handler model	Air handler width (in.)	Indoor coil model	Rated CFM	Net cool (MBH)	Sens cool (MBH)	SEER2	EER2
TCE2B18S21S	AE30BX21	17.50	—	525.00	17.40	11.90	15.25	12.75
TCE2B18S21S	AVC30BX21	17.50	—	600.00	17.90	12.80	15.25	12.75
TCE2B18S21S	JHETB18BXXS2N1	17.50	—	650.00	18.00	13.60	16.00	13.25
TCE2B18S21S	JHETB24CXXS2N1	17.50	—	575.00	18.00	13.30	16.50	13.50
TCE2B18S21S	JHVTB18BXXC2N1	17.50	—	675.00	18.00	13.80	16.00	13.25
TCE2B18S21S	JHVTB24CXXC2N1	17.50	—	600.00	18.00	13.50	16.50	13.50
TCE2B18S21S	JMET08BS2N1A	17.50	XAF/XAUB30C	650.00	18.00	13.80	16.50	13.50
TCE2B18S21S	JMET08BS2N1A	17.50	XAFB24B	650.00	18.00	13.60	16.00	13.25
TCE2B18S21S	JMET08BS2N1A	17.50	XAHB24B	625.00	18.00	13.50	16.00	13.25
TCE2B18S21S	JMET08BS2N1A	17.50	XAHB30C	625.00	18.00	13.70	16.50	13.50
TCE2B18S21S	JMET12BS2N1A	17.50	XAF/XAUB30C	675.00	18.00	14.00	16.50	13.50

Table 6: Air handler capacity

Outdoor unit model	Air handler model	Air handler width (in.)	Indoor coil model	Rated CFM	Net cool (MBH)	Sens cool (MBH)	SEER2	EER2
TCE2B18S21S	JMET12BS2N1A	17.50	XAFB24B	675.00	18.00	13.80	16.00	13.25
TCE2B18S21S	JMET12BS2N1A	17.50	XAHB24B	650.00	18.00	13.70	16.00	13.25
TCE2B18S21S	JMET12BS2N1A	17.50	XAHB30C	650.00	18.00	13.90	16.50	13.50
TCE2B18S21S	JMET12CS2N1A	21.00	XAFC30C	625.00	18.00	13.70	16.50	13.50
TCE2B18S21S	JMET12CS2N1A	21.00	XAHC30C	600.00	18.00	13.50	16.50	13.50
TCE2B18S21S	JMET16CS2N1A	21.00	XAFC30C	625.00	18.00	13.60	16.50	13.50
TCE2B18S21S	JMET16CS2N1A	21.00	XAHC30C	600.00	18.00	13.50	16.50	13.50
TCE2B18S21S	JMVT12BC2N1A	17.50	XAF/XAUB30C	725.00	18.00	14.40	16.50	13.50
TCE2B18S21S	JMVT12BC2N1A	17.50	XAFB24B	725.00	18.00	14.10	15.75	13.00
TCE2B18S21S	JMVT12BC2N1A	17.50	XAHB24B	650.00	18.00	13.70	15.75	13.00
TCE2B18S21S	JMVT12BC2N1A	17.50	XAHB30C	725.00	18.00	14.40	16.00	13.25
TCE2B18S21S	JMVT16CC2N1A	21.00	XAFC30C	675.00	18.00	14.00	16.50	13.50
TCE2B18S21S	JMVT16CC2N1A	21.00	XAHC30C	675.00	18.00	14.00	16.50	13.50
TCE2B18S21S	JMVT17CC2N1A	21.00	XAFC30C	725.00	18.00	14.40	16.50	13.50
TCE2B18S21S	JMVT17CC2N1A	21.00	XAHC30C	725.00	18.00	14.40	16.50	13.50
TCE2B18S21S	ME08BN21	17.50	CF/CM30B	725.00	18.00	13.70	15.50	12.75
TCE2B18S21S	ME12BN21	17.50	CF/CM30B	650.00	18.00	13.20	15.50	12.75
TCE2B18S21S	ME12CN21	21.00	CF/CM30C	600.00	17.90	12.80	15.50	12.75
TCE2B18S21S	ME16CN21	21.00	CF/CM30C	725.00	18.00	13.60	15.50	12.75
TCE2B18S21S	MVC12CN21	21.00	CF/CM30C	700.00	18.00	13.50	15.75	13.00
TCE2B24S21S	AE30BX21	17.50	—	750.00	23.40	16.40	15.50	12.75
TCE2B24S21S	AVC30BX21	17.50	—	925.00	23.80	17.90	15.25	12.50
TCE2B24S21S	JHETB24CXXS2N1	17.50	—	750.00	24.00	17.50	16.25	13.50
TCE2B24S21S	JHVTB24CXXC2N1	17.50	—	800.00	24.00	17.90	16.25	13.50
TCE2B24S21S	JMET08BS2N1A	17.50	XAF/XAUB30C	725.00	24.00	17.30	16.25	13.50
TCE2B24S21S	JMET08BS2N1A	17.50	XAFB24B	725.00	23.60	16.80	15.75	13.00
TCE2B24S21S	JMET08BS2N1A	17.50	XAHB24B	700.00	23.40	16.50	15.75	13.00
TCE2B24S21S	JMET08BS2N1A	17.50	XAHB30C	700.00	23.80	17.00	16.25	13.50
TCE2B24S21S	JMET12BS2N1A	17.50	XAF/XAUB30C	800.00	24.00	17.90	16.50	13.50
TCE2B24S21S	JMET12BS2N1A	17.50	XAFB24B	775.00	23.80	17.30	15.75	13.00
TCE2B24S21S	JMET12BS2N1A	17.50	XAHB24B	775.00	23.80	17.30	15.75	13.00
TCE2B24S21S	JMET12BS2N1A	17.50	XAHB30C	775.00	24.00	17.70	16.25	13.50
TCE2B24S21S	JMET12CS2N1A	21.00	XAFC30C	950.00	23.80	18.80	16.25	13.50
TCE2B24S21S	JMET12CS2N1A	21.00	XAHC30C	925.00	23.80	18.70	16.25	13.50
TCE2B24S21S	JMET16CS2N1A	21.00	XAFC30C	950.00	23.80	18.80	16.25	13.50
TCE2B24S21S	JMET16CS2N1A	21.00	XAHC30C	925.00	23.80	18.70	16.25	13.50
TCE2B24S21S	JMVT12BC2N1A	17.50	XAF/XAUB30C	825.00	24.00	18.10	16.25	13.50
TCE2B24S21S	JMVT12BC2N1A	17.50	XAFB24B	775.00	23.80	17.30	15.75	13.00
TCE2B24S21S	JMVT12BC2N1A	17.50	XAHB24B	775.00	23.60	17.20	15.75	13.00
TCE2B24S21S	JMVT12BC2N1A	17.50	XAHB30C	775.00	24.00	17.70	16.25	13.50
TCE2B24S21S	JMVT16CC2N1A	21.00	XAFC30C	900.00	24.00	18.60	16.25	13.50
TCE2B24S21S	JMVT16CC2N1A	21.00	XAHC30C	900.00	24.00	18.60	16.25	13.50
TCE2B24S21S	JMVT17CC2N1A	21.00	XAFC30C	850.00	24.00	18.20	16.50	13.50
TCE2B24S21S	JMVT17CC2N1A	21.00	XAHC30C	850.00	24.00	18.20	16.25	13.50
TCE2B24S21S	ME08BN21	17.50	CF/CM30B	725.00	23.40	16.30	15.25	12.50
TCE2B24S21S	ME12BN21	17.50	CF/CM30B	900.00	23.80	17.70	15.50	12.75
TCE2B24S21S	ME12BN41	17.50	CF/CM30B	725.00	23.40	16.20	15.50	12.75
TCE2B24S21S	ME12CN21	21.00	CF/CM30C	775.00	23.60	16.70	15.50	12.75
TCE2B24S21S	ME12CN41	21.00	CF/CM30C	775.00	23.60	16.70	15.50	12.75
TCE2B24S21S	ME16CN21	21.00	CF/CM30C	900.00	23.80	17.70	15.50	12.75
TCE2B24S21S	ME16CN41	21.00	CF/CM30C	850.00	23.80	17.40	15.50	12.75

Table 6: Air handler capacity

Outdoor unit model	Air handler model	Air handler width (in.)	Indoor coil model	Rated CFM	Net cool (MBH)	Sens cool (MBH)	SEER2	EER2
TCE2B24S21S	MVC12BN21	17.50	CF/CM30B	875.00	24.00	17.60	15.75	13.00
TCE2B24S21S	MVC12CN21	21.00	CF/CM30C	900.00	24.00	17.80	15.75	13.00
TCE2B24S21S	MVC16CN21	21.00	CF/CM30C	900.00	24.00	17.80	15.75	13.00
TCE2B30S21S	AE30BX21	17.50	—	950.00	29.60	20.00	15.00	12.50
TCE2B30S21S	AE36BX21	17.50	—	900.00	29.60	19.70	15.50	12.75
TCE2B30S21S	AE36CX21	21.00	—	1050.00	29.80	20.80	15.50	12.75
TCE2B30S21S	AVC30BX21	17.50	—	925.00	29.40	19.70	15.00	12.50
TCE2B30S21S	AVC36BX21	17.50	—	925.00	29.60	19.90	15.25	12.75
TCE2B30S21S	AVC36CX21	21.00	—	1000.00	29.80	20.40	15.50	12.75
TCE2B30S21S	JHETB30DXXS2N1	17.50	—	950.00	30.00	20.80	15.75	13.00
TCE2B30S21S	JHETB36DXXS2N1	17.50	—	1200.00	30.00	22.40	15.25	12.50
TCE2B30S21S	JHETC36DXXS2N1	21.00	—	800.00	29.40	19.20	16.00	13.25
TCE2B30S21S	JHVTB36DXXC2N1	17.50	—	850.00	29.60	19.70	15.75	13.00
TCE2B30S21S	JHVTC36DXXC2N1	21.00	—	1050.00	30.00	21.20	16.00	13.25
TCE2B30S21S	JMET12BS2N1A	17.50	XAF/XAUB30C	800.00	29.20	19.40	16.00	13.25
TCE2B30S21S	JMET12BS2N1A	17.50	XAF/XAUB36D	1175.00	30.00	22.20	15.50	12.75
TCE2B30S21S	JMET12BS2N1A	17.50	XAHB30C	1150.00	29.80	22.40	15.25	12.75
TCE2B30S21S	JMET12CS2N1A	21.00	XAFC30C	950.00	29.80	20.80	16.00	13.25
TCE2B30S21S	JMET12CS2N1A	21.00	XAFC36D	925.00	29.80	20.40	16.00	13.25
TCE2B30S21S	JMET12CS2N1A	21.00	XAHC30C	925.00	29.80	20.80	15.75	13.00
TCE2B30S21S	JMET12CS2N1A	21.00	XAHC36D	925.00	29.80	20.40	16.00	13.25
TCE2B30S21S	JMET16CS2N1A	21.00	XAFC30C	950.00	29.80	20.80	16.00	13.25
TCE2B30S21S	JMET16CS2N1A	21.00	XAFC36D	925.00	30.00	20.40	16.00	13.25
TCE2B30S21S	JMET16CS2N1A	21.00	XAHC30C	925.00	29.80	20.80	16.00	13.25
TCE2B30S21S	JMET16CS2N1A	21.00	XAHC36D	900.00	29.80	20.20	16.00	13.25
TCE2B30S21S	JMVT12BC2N1A	17.50	XAF/XAUB30C	825.00	29.40	19.70	16.00	13.25
TCE2B30S21S	JMVT12BC2N1A	17.50	XAF/XAUB36D	900.00	29.80	20.20	15.75	13.00
TCE2B30S21S	JMVT12BC2N1A	17.50	XAHB30C	825.00	29.40	19.80	15.75	13.00
TCE2B30S21S	JMVT12BC2N1A	17.50	XAHB36D	900.00	29.80	20.20	15.75	13.00
TCE2B30S21S	JMVT16CC2N1A	21.00	XAFC30C	900.00	29.80	20.60	16.00	13.25
TCE2B30S21S	JMVT16CC2N1A	21.00	XAFC36D	975.00	30.00	20.80	16.00	13.25
TCE2B30S21S	JMVT16CC2N1A	21.00	XAHC30C	900.00	29.80	20.60	16.00	13.25
TCE2B30S21S	JMVT16CC2N1A	21.00	XAHC36D	975.00	30.00	20.80	16.00	13.25
TCE2B30S21S	JMVT17CC2N1A	21.00	XAFC30C	975.00	29.80	21.00	16.00	13.25
TCE2B30S21S	JMVT17CC2N1A	21.00	XAFC36D	975.00	30.00	20.80	16.00	13.25
TCE2B30S21S	JMVT17CC2N1A	21.00	XAHC30C	975.00	29.80	21.00	16.00	13.25
TCE2B30S21S	JMVT17CC2N1A	21.00	XAHC36D	1000.00	30.00	21.00	16.00	13.25
TCE2B30S21S	ME12BN21	17.50	CF/CM30B	900.00	29.40	19.50	15.25	12.75
TCE2B30S21S	ME12BN21	17.50	CF/CM36B	900.00	29.40	19.60	15.25	12.75
TCE2B30S21S	ME12CN21	21.00	CF/CM30C	1000.00	29.60	20.20	15.00	12.50
TCE2B30S21S	ME12CN21	21.00	CF/CM36C	1025.00	29.80	20.60	15.25	12.75
TCE2B30S21S	ME16CN21	21.00	CF/CM30C	900.00	29.40	19.50	15.25	12.75
TCE2B30S21S	ME16CN21	21.00	CF/CM36C	900.00	29.40	19.60	15.25	12.75
TCE2B30S21S	MVC12BN21	17.50	CF/CM30B	875.00	29.20	19.20	15.25	12.75
TCE2B30S21S	MVC12BN21	17.50	CF/CM36B	975.00	29.80	20.40	15.50	12.75
TCE2B30S21S	MVC12CN21	21.00	CF/CM30C	1050.00	29.60	20.40	15.50	12.75
TCE2B30S21S	MVC12CN21	21.00	CF/CM36C	1050.00	29.80	20.80	15.50	12.75
TCE2B30S21S	MVC16CN21	21.00	CF/CM30C	1025.00	29.60	20.40	15.50	12.75
TCE2B30S21S	MVC16CN21	21.00	CF/CM36C	1125.00	29.80	21.20	15.50	12.75
TCE2B36S21S	JHETB36DXXS2N1	17.50	—	1200.00	35.80	26.80	14.75	12.50
TCE2B36S21S	JHETC36DXXS2N1	21.00	—	1175.00	35.80	26.60	15.25	12.75

Table 6: Air handler capacity

Outdoor unit model	Air handler model	Air handler width (in.)	Indoor coil model	Rated CFM	Net cool (MBH)	Sens cool (MBH)	SEER2	EER2
TCE2B36S21S	JHVTB36DXXC2N1	17.50	—	1000.00	35.00	24.80	15.00	12.50
TCE2B36S21S	JHVTC36DXXC2N1	21.00	—	1125.00	35.80	26.00	15.50	12.75
TCE2B36S21S	JMET12BS2N1A	17.50	XAF/XAUB36D	1175.00	35.80	26.60	15.00	12.50
TCE2B36S21S	JMET12BS2N1A	17.50	XAFB36E	1150.00	35.80	26.40	15.00	12.50
TCE2B36S21S	JMET12CS2N1A	21.00	XAF/XAUC42E	1125.00	35.80	26.20	15.25	12.75
TCE2B36S21S	JMET12CS2N1A	21.00	XAFC36D	1100.00	35.60	25.80	15.25	12.75
TCE2B36S21S	JMET12CS2N1A	21.00	XAHC36D	1100.00	35.60	25.80	15.25	12.75
TCE2B36S21S	JMET12CS2N1A	21.00	XAHC42E	1100.00	35.40	25.80	15.25	12.75
TCE2B36S21S	JMET16CS2N1A	21.00	XAF/XAUC42E	1150.00	35.80	26.40	15.50	12.75
TCE2B36S21S	JMET16CS2N1A	21.00	XAFC36D	1125.00	35.60	26.00	15.25	12.75
TCE2B36S21S	JMET16CS2N1A	21.00	XAHC36D	1125.00	35.60	26.00	15.25	12.75
TCE2B36S21S	JMET16CS2N1A	21.00	XAHC42E	1125.00	35.80	26.20	15.25	12.75
TCE2B36S21S	JMET18DS2N1A	24.50	XAFD42E	1025.00	35.20	24.80	15.50	12.75
TCE2B36S21S	JMET18DS2N1A	24.50	XAHD42E	1025.00	35.20	24.80	15.50	12.75
TCE2B36S21S	JMVT12BC2N1A	17.50	XAF/XAUB36D	1050.00	35.20	25.20	15.25	12.75
TCE2B36S21S	JMVT12BC2N1A	17.50	XAFB36E	1050.00	35.20	25.20	15.25	12.75
TCE2B36S21S	JMVT12BC2N1A	17.50	XAHB36D	1050.00	35.20	25.20	15.00	12.50
TCE2B36S21S	JMVT17CC2N1A	21.00	XAF/XAUC42E	1050.00	35.20	25.00	15.50	12.75
TCE2B36S21S	JMVT17CC2N1A	21.00	XAFC36D	1050.00	35.20	25.00	15.50	12.75
TCE2B36S21S	JMVT17CC2N1A	21.00	XAHC36D	1000.00	35.20	24.80	15.50	12.75
TCE2B36S21S	JMVT17CC2N1A	21.00	XAHC42E	1075.00	35.40	25.40	15.50	12.75
TCE2B36S21S	JMVT20DC2N1A	24.50	XAFD42E	1050.00	35.40	25.20	15.50	12.75
TCE2B36S21S	JMVT20DC2N1A	24.50	XAHD42E	1050.00	35.40	25.20	15.50	12.75
TCE2B36S21S	ME12BN21	17.50	CF42B	1125.00	35.60	25.80	14.50	12.75
TCE2B36S21S	ME12CN21	21.00	CF/CM42C	1025.00	34.80	24.40	15.00	12.50
TCE2B36S21S	ME16CN21	21.00	CF/CM42C	1175.00	35.60	26.20	14.50	12.75
TCE2B36S21S	MVC12BN21	17.50	CF42B	1025.00	34.80	24.60	14.50	12.75
TCE2B36S21S	MVC12CN21	21.00	CF/CM42C	1100.00	35.40	25.40	15.00	12.50
TCE2B36S21S	MVC16CN21	21.00	CF/CM42C	1125.00	35.40	25.60	15.00	12.50
TCE2B42S21S	AE42CX21	21.00	—	1200.00	40.00	28.40	15.00	12.50
TCE2B42S21S	AE48CX21	21.00	—	1250.00	40.00	28.60	15.25	12.75
TCE2B42S21S	AE48DX21	24.50	—	1300.00	40.50	29.40	15.75	12.75
TCE2B42S21S	AVC42CX21	21.00	—	1200.00	40.00	28.40	15.00	12.50
TCE2B42S21S	AVC48CX21	21.00	—	1200.00	40.00	28.40	15.25	12.75
TCE2B42S21S	AVC48DX21	24.50	—	1225.00	40.00	28.40	15.50	12.75
TCE2B42S21S	JHETC42FXXS2N1	21.00	—	1325.00	40.50	29.40	15.25	12.75
TCE2B42S21S	JHVTC42FXXC2N1	21.00	—	1250.00	40.50	28.80	15.75	13.00
TCE2B42S21S	JHVTD42FXXC2N1	24.50	—	1225.00	40.50	28.60	15.75	13.00
TCE2B42S21S	JMET12CS2N1A	21.00	XAF/XAUC42E	1300.00	40.50	29.60	15.50	12.75
TCE2B42S21S	JMET12CS2N1A	21.00	XAF/XAUC48F	1325.00	40.50	29.40	15.50	12.75
TCE2B42S21S	JMET12CS2N1A	21.00	XAHC48F	1325.00	40.50	29.40	15.50	12.75
TCE2B42S21S	JMET16CS2N1A	21.00	XAF/XAUC42E	1550.00	41.00	32.00	15.00	12.50
TCE2B42S21S	JMET16CS2N1A	21.00	XAF/XAUC48F	1575.00	41.00	31.60	14.75	12.50
TCE2B42S21S	JMET16CS2N1A	21.00	XAHC48F	1575.00	41.00	31.60	14.75	12.50
TCE2B42S21S	JMET18DS2N1A	24.50	XAFD42E	1550.00	41.50	32.20	15.25	12.75
TCE2B42S21S	JMET18DS2N1A	24.50	XAFD48F	1575.00	41.50	31.80	15.25	12.75
TCE2B42S21S	JMET18DS2N1A	24.50	XAHD48F	1550.00	41.00	31.40	15.25	12.75
TCE2B42S21S	JMVT16CC2N1A	21.00	XAF/XAUC42E	1200.00	40.00	28.40	15.75	13.00
TCE2B42S21S	JMVT16CC2N1A	21.00	XAF/XAUC48F	1200.00	40.00	28.20	15.75	13.00
TCE2B42S21S	JMVT16CC2N1A	21.00	XAHC42E	1200.00	40.00	28.40	15.50	12.75
TCE2B42S21S	JMVT16CC2N1A	21.00	XAHC48F	1200.00	40.00	28.00	15.75	13.00

Table 6: Air handler capacity

Outdoor unit model	Air handler model	Air handler width (in.)	Indoor coil model	Rated CFM	Net cool (MBH)	Sens cool (MBH)	SEER2	EER2
TCE2B42S21S	JMVT17CC2N1A	21.00	XAF/XAUC42E	1200.00	40.00	28.40	15.75	13.00
TCE2B42S21S	JMVT17CC2N1A	21.00	XAF/XAUC48F	1200.00	40.00	28.20	15.75	13.00
TCE2B42S21S	JMVT17CC2N1A	21.00	XAHC42E	1200.00	40.00	28.40	15.50	12.75
TCE2B42S21S	JMVT17CC2N1A	21.00	XAHC48F	1200.00	40.00	28.00	15.75	13.00
TCE2B42S21S	JMVT20DC2N1A	24.50	XAFD42E	1250.00	40.50	29.00	15.75	13.00
TCE2B42S21S	JMVT20DC2N1A	24.50	XAFD48F	1250.00	40.50	28.80	15.75	13.00
TCE2B42S21S	JMVT20DC2N1A	24.50	XAHD42E	1250.00	40.50	29.00	15.75	13.00
TCE2B42S21S	JMVT20DC2N1A	24.50	XAHD48F	1250.00	40.50	28.80	15.75	13.00
TCE2B42S21S	ME14DN21	24.50	CF/CM48D	1275.00	40.50	29.20	15.50	12.75
TCE2B42S21S	ME16CN21	21.00	CF/CM42C	1400.00	40.00	29.80	15.00	12.50
TCE2B42S21S	ME16CN21	21.00	CF/CM48C	1400.00	40.50	30.20	15.00	12.50
TCE2B42S21S	ME20DN21	24.50	CF/CM48D	1325.00	41.00	29.80	15.75	12.75
TCE2B42S21S	MVC12CN21	21.00	CF/CM42C	1225.00	40.00	28.40	15.25	12.75
TCE2B42S21S	MVC12CN21	21.00	CF/CM48C	1225.00	40.00	28.40	15.25	12.75
TCE2B42S21S	MVC14DN21	24.50	CF/CM48D	1325.00	40.50	29.60	15.50	12.75
TCE2B42S21S	MVC16CN21	21.00	CF/CM42C	1250.00	40.00	28.60	15.50	12.75
TCE2B42S21S	MVC16CN21	21.00	CF/CM48C	1275.00	40.50	29.20	15.50	12.75
TCE2B42S21S	MVC20DN21	24.50	CF/CM48D	1300.00	40.50	29.20	15.75	13.00
TCE2B48S21S	AE48CX21	21.00	—	1475.00	47.50	33.80	14.50	12.00
TCE2B48S21S	AE48DX21	24.50	—	1550.00	48.00	34.60	14.75	12.25
TCE2B48S21S	AE60CX22	21.00	—	1500.00	48.00	34.20	14.25	12.00
TCE2B48S21S	AVC48CX21	21.00	—	1350.00	46.50	32.20	14.50	12.00
TCE2B48S21S	AVC48DX21	24.50	—	1325.00	46.50	31.80	14.75	12.25
TCE2B48S21S	AVC60CX22	21.00	—	1400.00	47.50	33.40	14.00	11.75
TCE2B48S21S	JHETC48GXXS2N1	21.00	—	1575.00	48.00	34.60	14.75	12.25
TCE2B48S21S	JHETD48GXXS2N1	24.50	—	1375.00	48.00	33.00	15.00	12.50
TCE2B48S21S	JHVTC48GXXC2N1	21.00	—	1325.00	48.00	32.60	15.00	12.50
TCE2B48S21S	JHVTD48GXXC2N1	24.50	—	1400.00	48.00	33.20	15.00	12.50
TCE2B48S21S	JMET12CS2N1A	21.00	XAF/XAUC48F	1325.00	46.50	31.60	14.50	12.00
TCE2B48S21S	JMET12CS2N1A	21.00	XAF/XAUC60G	1350.00	48.00	32.80	15.00	12.25
TCE2B48S21S	JMET12CS2N1A	21.00	XAHC48F	1325.00	46.50	31.60	14.50	12.00
TCE2B48S21S	JMET12CS2N1A	21.00	XAHC60G	1350.00	48.00	32.80	15.00	12.25
TCE2B48S21S	JMET16CS2N1A	21.00	XAF/XAUC48F	1575.00	47.50	34.40	14.25	11.75
TCE2B48S21S	JMET16CS2N1A	21.00	XAF/XAUC60G	1600.00	48.00	34.80	14.50	12.00
TCE2B48S21S	JMET16CS2N1A	21.00	XAHC48F	1575.00	47.50	34.40	14.25	11.75
TCE2B48S21S	JMET16CS2N1A	21.00	XAHC60G	1600.00	48.00	34.80	14.50	12.00
TCE2B48S21S	JMET18DS2N1A	24.50	XAF/XAUD60G	1575.00	48.00	34.60	15.00	12.25
TCE2B48S21S	JMET18DS2N1A	24.50	XAFD48F	1575.00	48.00	34.60	14.50	12.00
TCE2B48S21S	JMET18DS2N1A	24.50	XAHD48F	1550.00	48.00	34.40	14.50	12.00
TCE2B48S21S	JMET18DS2N1A	21.00	XAHD60G	1550.00	48.00	34.40	14.75	12.25
TCE2B48S21S	JMVT16CC2N1A	21.00	XAF/XAUC48F	1400.00	47.50	33.00	14.50	12.00
TCE2B48S21S	JMVT16CC2N1A	21.00	XAF/XAUC60G	1400.00	48.00	33.20	15.00	12.50
TCE2B48S21S	JMVT16CC2N1A	21.00	XAHC48F	1400.00	47.50	33.00	14.50	12.00
TCE2B48S21S	JMVT16CC2N1A	21.00	XAHC60G	1400.00	48.00	33.20	15.00	12.50
TCE2B48S21S	JMVT17CC2N1A	21.00	XAF/XAUC48F	1400.00	47.50	33.00	14.50	12.00
TCE2B48S21S	JMVT17CC2N1A	21.00	XAF/XAUC60G	1400.00	48.00	33.20	15.00	12.50
TCE2B48S21S	JMVT17CC2N1A	21.00	XAHC48F	1400.00	47.50	33.00	14.50	12.00
TCE2B48S21S	JMVT17CC2N1A	21.00	XAHC60G	1400.00	48.00	33.20	15.00	12.50
TCE2B48S21S	JMVT20DC2N1A	24.50	XAF/XAUD60G	1325.00	48.00	32.60	15.25	12.50
TCE2B48S21S	JMVT20DC2N1A	24.50	XAFD48F	1325.00	46.50	31.60	14.75	12.25
TCE2B48S21S	JMVT20DC2N1A	24.50	XAHD48F	1325.00	46.50	31.60	14.75	12.25

Table 6: Air handler capacity

Outdoor unit model	Air handler model	Air handler width (in.)	Indoor coil model	Rated CFM	Net cool (MBH)	Sens cool (MBH)	SEER2	EER2
TCE2B48S21S	JMVT20DC2N1A	21.00	XAHD60G	1325.00	48.00	32.60	15.25	12.50
TCE2B48S21S	ME14DN21	24.50	CF/CM48D	1375.00	47.00	32.60	14.75	12.25
TCE2B48S21S	ME14DN21	24.50	CF/CM60D	1375.00	48.00	33.00	14.75	12.25
TCE2B48S21S	ME14DN41	24.50	CF/CM48D	1400.00	47.50	33.20	14.75	12.00
TCE2B48S21S	ME14DN41	24.50	CF/CM60D	1400.00	48.00	33.20	14.75	12.25
TCE2B48S21S	ME16CN21	21.00	CF/CM48C	1400.00	47.50	33.20	14.50	12.00
TCE2B48S21S	ME16CN21	21.00	CF/CM60C	1400.00	48.00	33.40	14.50	12.00
TCE2B48S21S	ME16CN41	21.00	CF/CM48C	1400.00	47.50	33.20	14.50	12.00
TCE2B48S21S	ME16CN41	21.00	CF/CM60C	1400.00	48.00	33.40	14.50	12.00
TCE2B48S21S	ME20DN21	24.50	CF/CM48D	1325.00	46.50	31.80	15.00	12.25
TCE2B48S21S	ME20DN21	24.50	CF/CM60D	1325.00	47.00	32.00	15.00	12.50
TCE2B48S21S	ME20DN41	24.50	CF/CM48D	1325.00	46.50	31.80	14.75	12.25
TCE2B48S21S	ME20DN41	24.50	CF/CM60D	1325.00	47.00	32.00	15.00	12.50
TCE2B48S21S	MVC12CN21	21.00	CF/CM48C	1400.00	47.50	33.20	14.50	12.00
TCE2B48S21S	MVC12CN21	21.00	CF/CM60C	1400.00	48.00	33.40	14.50	12.00
TCE2B48S21S	MVC14DN21	24.50	CF/CM48D	1325.00	46.50	31.80	14.75	12.25
TCE2B48S21S	MVC14DN21	24.50	CF/CM60D	1425.00	48.00	33.40	15.00	12.50
TCE2B48S21S	MVC16CN21	21.00	CF/CM48C	1325.00	46.50	31.80	14.75	12.25
TCE2B48S21S	MVC16CN21	21.00	CF/CM60C	1325.00	47.00	32.00	14.75	12.25
TCE2B48S21S	MVC20DN21	24.50	CF/CM48D	1400.00	47.50	33.00	15.00	12.25
TCE2B48S21S	MVC20DN21	24.50	CF/CM60D	1400.00	48.00	33.20	15.25	12.50
TCE2B60S21S	AE60CX22	21.00	—	1700.00	56.00	39.00	13.80	11.50
TCE2B60S21S	AE60DX21	24.50	—	1625.00	57.00	39.00	14.25	12.00
TCE2B60S21S	AVC60DX21	24.50	—	1550.00	56.50	38.00	14.25	12.00
TCE2B60S21S	JHETC60HXXS2N1	21.00	—	1575.00	56.50	38.50	14.50	12.25
TCE2B60S21S	JHETD60HXXS2N1	24.50	—	1575.00	56.50	38.50	14.50	12.25
TCE2B60S21S	JHVTC60HXXC2N1	21.00	—	1525.00	56.50	38.00	14.50	12.00
TCE2B60S21S	JHVTD60HXXC2N1	24.50	—	1650.00	57.00	39.00	14.50	12.25
TCE2B60S21S	JMET16CS2N1A	21.00	XAF/XAUC60G	1600.00	56.50	38.00	14.25	12.00
TCE2B60S21S	JMET16CS2N1A	21.00	XAFC60H	1600.00	56.50	38.50	14.25	12.00
TCE2B60S21S	JMET16CS2N1A	21.00	XAHC60G	1600.00	56.50	38.00	14.25	12.00
TCE2B60S21S	JMET16CS2N1A	21.00	XAHC60H	1600.00	56.50	38.50	14.25	12.00
TCE2B60S21S	JMET18DS2N1A	24.50	XAF/XAUD60G	1575.00	56.50	38.00	14.50	12.25
TCE2B60S21S	JMET18DS2N1A	24.50	XAF/XAUD60H	1575.00	56.50	38.50	14.50	12.25
TCE2B60S21S	JMET18DS2N1A	21.00	XAHD60G	1550.00	56.00	37.60	14.50	12.00
TCE2B60S21S	JMET18DS2N1A	24.50	XAHD60H	1575.00	56.50	38.50	14.50	12.25
TCE2B60S21S	JMVT16CC2N1A	21.00	XAF/XAUC60G	1600.00	56.50	38.00	14.25	12.00
TCE2B60S21S	JMVT16CC2N1A	21.00	XAFC60H	1600.00	57.00	39.00	14.50	12.00
TCE2B60S21S	JMVT16CC2N1A	21.00	XAHC60G	1600.00	56.50	38.00	14.25	12.00
TCE2B60S21S	JMVT16CC2N1A	21.00	XAHC60H	1600.00	57.00	39.00	14.50	12.25
TCE2B60S21S	JMVT17CC2N1A	21.00	XAF/XAUC60G	1600.00	56.50	38.00	14.25	12.00
TCE2B60S21S	JMVT17CC2N1A	21.00	XAFC60H	1600.00	57.00	39.00	14.50	12.00
TCE2B60S21S	JMVT17CC2N1A	21.00	XAHC60G	1600.00	56.50	38.00	14.25	12.00
TCE2B60S21S	JMVT17CC2N1A	21.00	XAHC60H	1600.00	57.00	39.00	14.50	12.25
TCE2B60S21S	ME20DN21	24.50	CF/CM60D	1575.00	56.00	37.60	14.25	12.00
TCE2B60S21S	ME20DN21	24.50	CF/CM64D	1550.00	56.50	38.00	14.50	12.25
TCE2B60S21S	MVC14DN21	24.50	CF/CM60D	1525.00	56.00	37.40	14.25	12.00
TCE2B60S21S	MVC14DN21	24.50	CF/CM64D	1575.00	57.00	38.50	14.50	12.25
TCE2B60S21S	MVC16CN21	21.00	CF/CM60C	1675.00	56.50	39.00	14.00	11.75
TCE2B60S21S	MVC20DN21	24.50	CF/CM60D	1600.00	56.50	38.00	14.50	12.00
TCE2B60S21S	MVC20DN21	24.50	CF/CM64D	1600.00	57.00	38.50	14.50	12.25

Air handler capacity data notes

- Rated in accordance with DOE test procedures (Federal Register 12-27-79 and 3-18-88) and ANSI/AHRI Standard 210/240.
- The cooling MBH is based on 80°F entering air temperature, 50% relative humidity (RH), and rated airflow.
- The energy efficiency ratio (EER2) is the total cooling output in Btus at 95°F outdoor ambient divided by the total electric power in watt-hours at those conditions.
- The seasonal energy efficiency ratio (SEER2) is the total cooling output in Btus during a normal annual usage period for cooling divided by the total electric power input in watt-hours during the same period.
- A cell with no value means not applicable.

Coil only capacity

Table 7: Coil only capacity

Outdoor unit model	Indoor coil model	Indoor coil width (in.)	CFM range	Rated CFM	Net cool (MBH)	Sens cool (MBH)	SEER2	EER2
TCE2B18S21S	CF/CM/CU30B	17.50	450—750	600.00	17.60	12.80	14.30	11.75
TCE2B18S21S	CF/CM30A	14.50	450—750	600.00	17.60	12.80	14.30	11.75
TCE2B18S21S	CF/CM30C	21.00	450—750	600.00	17.60	12.80	14.30	11.75
TCE2B18S21S	XAF/XAUA24B	14.50	450—750	600.00	17.60	0.00	14.30	11.75
TCE2B18S21S	XAF/XAUB30C	17.50	450—750	600.00	17.60	13.50	14.30	11.75
TCE2B18S21S	XAFB24B	17.50	450—750	600.00	17.60	13.30	14.30	11.75
TCE2B18S21S	XAFC30C	21.00	450—750	600.00	17.60	13.50	14.30	11.75
TCE2B18S21S	XAHA24B	14.50	450—750	600.00	17.60	13.30	14.30	11.75
TCE2B18S21S	XAHB24B	17.50	450—750	600.00	17.60	13.30	14.30	11.75
TCE2B18S21S	XAHB30C	17.50	450—750	600.00	17.60	13.50	14.30	11.75
TCE2B18S21S	XAHC30C	21.00	450—750	600.00	17.60	13.50	14.30	11.75
TCE2B24S21S	CF/CM/CU30B	17.50	600—1000	800.00	23.20	17.00	14.30	11.75
TCE2B24S21S	CF/CM30A	14.50	600—1000	800.00	23.20	17.00	14.30	11.75
TCE2B24S21S	CF/CM30C	21.00	600—1000	800.00	23.20	17.00	14.30	11.75
TCE2B24S21S	XAF/XAUA24B	14.50	600—1000	800.00	23.20	17.40	14.30	11.75
TCE2B24S21S	XAF/XAUB30C	17.50	600—1000	800.00	23.20	17.70	14.30	11.75
TCE2B24S21S	XAFB24B	17.50	600—1000	800.00	23.20	0.00	14.30	11.75
TCE2B24S21S	XAFC30C	21.00	600—1000	800.00	23.20	17.70	14.30	11.75
TCE2B24S21S	XAHA24B	14.50	600—1000	800.00	23.20	17.40	14.30	11.75
TCE2B24S21S	XAHB24B	17.50	600—1000	800.00	23.20	17.40	14.30	11.75
TCE2B24S21S	XAHB30C	17.50	600—1000	800.00	23.20	17.70	14.30	11.75
TCE2B24S21S	XAHC30C	21.00	600—1000	800.00	23.20	17.70	14.30	11.75
TCE2B30S21S	CF/CM/CU30B	17.50	800—1200	1000.00	29.00	20.20	14.30	11.75
TCE2B30S21S	CF/CM/CU36B	17.50	800—1200	1000.00	29.00	20.40	14.30	11.75
TCE2B30S21S	CF/CM30C	21.00	800—1200	1000.00	29.00	20.20	14.30	11.75
TCE2B30S21S	CF/CM36C	21.00	800—1200	1000.00	29.00	20.40	14.30	11.75
TCE2B30S21S	XAF/XAUB30C	17.50	800—1200	1000.00	29.00	0.00	14.30	11.75
TCE2B30S21S	XAF/XAUB36D	17.50	800—1200	1000.00	29.00	20.60	14.30	11.75
TCE2B30S21S	XAFC30C	21.00	800—1200	1000.00	29.00	21.20	14.30	11.75
TCE2B30S21S	XAFC36D	21.00	800—1200	1000.00	29.00	20.60	14.30	11.75
TCE2B30S21S	XAHB30C	17.50	800—1200	1000.00	29.00	21.20	14.30	11.75
TCE2B30S21S	XAHB36D	17.50	800—1200	900.00	28.80	19.90	14.30	11.75
TCE2B30S21S	XAHC30C	21.00	800—1200	1000.00	29.00	21.20	14.30	11.75
TCE2B30S21S	XAHC36D	21.00	800—1200	1000.00	29.00	20.60	14.30	11.75
TCE2B36S21S	CF/CM42C	21.00	1000—1400	1150.00	35.00	26.00	14.30	11.75
TCE2B36S21S	CF42B	17.50	1000—1400	1150.00	35.00	26.00	14.30	11.75
TCE2B36S21S	XAF/XAUC42E	21.00	1000—1400	1150.00	35.00	26.20	14.30	11.75
TCE2B36S21S	XAFB36E	17.50	1000—1400	1100.00	35.00	25.80	14.30	11.75
TCE2B36S21S	XAFC36D	21.00	1000—1400	1150.00	35.00	26.20	14.30	11.75
TCE2B36S21S	XAFD42E	24.50	1000—1400	1150.00	35.00	26.20	14.30	11.75
TCE2B36S21S	XAHC36D	21.00	1000—1400	1150.00	35.00	26.20	14.30	11.75

Table 7: Coil only capacity

Outdoor unit model	Indoor coil model	Indoor coil width (in.)	CFM range	Rated CFM	Net cool (MBH)	Sens cool (MBH)	SEER2	EER2
TCE2B36S21S	XAHC42E	21.00	1000—1400	1150.00	35.00	26.20	14.30	11.75
TCE2B36S21S	XAHD42E	24.50	1000—1400	1150.00	35.00	26.20	14.30	11.75
TCE2B42S21S	CF/CM42C	21.00	1200—1600	1350.00	40.00	29.80	14.30	11.75
TCE2B42S21S	CF/CM48C	21.00	1200—1600	1350.00	40.00	30.00	14.30	11.75
TCE2B42S21S	CF/CM48D	24.50	1200—1600	1350.00	40.00	30.00	14.30	11.75
TCE2B42S21S	XAF/XAUC42E	21.00	1200—1600	1350.00	40.00	0.00	14.30	11.75
TCE2B42S21S	XAF/XAUC48F	21.00	1200—1600	1350.00	40.00	29.80	14.30	11.75
TCE2B42S21S	XAFD42E	24.50	1200—1600	1350.00	40.00	30.00	14.30	11.75
TCE2B42S21S	XAFD48F	24.50	1200—1600	1350.00	40.00	29.80	14.30	11.75
TCE2B42S21S	XAHC48F	21.00	1200—1600	1350.00	40.00	29.80	14.30	11.75
TCE2B42S21S	XAHD42E	24.50	1200—1600	1275.00	40.00	29.40	14.30	11.75
TCE2B42S21S	XAHD48F	24.50	1200—1600	1350.00	40.00	29.80	14.30	11.75
TCE2B48S21S	CF/CM48C	21.00	1400—1800	1525.00	47.00	34.40	13.80	11.25
TCE2B48S21S	CF/CM48D	24.50	1400—1800	1525.00	47.00	34.40	13.80	11.25
TCE2B48S21S	CF/CM60C	21.00	1400—1800	1525.00	47.50	34.40	13.80	11.25
TCE2B48S21S	CF/CM60D	24.50	1400—1800	1525.00	47.50	34.40	13.80	11.25
TCE2B48S21S	XAF/XAUC48F	21.00	1400—1800	1525.00	47.00	0.00	13.80	11.25
TCE2B48S21S	XAF/XAUC60G	21.00	1400—1800	1525.00	47.50	34.40	13.80	11.25
TCE2B48S21S	XAF/XAUD60G	24.50	1400—1800	1525.00	47.50	34.40	13.80	11.25
TCE2B48S21S	XAFD48F	24.50	1400—1800	1525.00	47.00	34.00	13.80	11.25
TCE2B48S21S	XAHC48F	21.00	1400—1800	1525.00	47.00	34.00	13.80	11.25
TCE2B48S21S	XAHC60G	21.00	1400—1800	1525.00	47.50	34.40	13.80	11.25
TCE2B48S21S	XAHD48F	24.50	1400—1800	1525.00	47.00	34.00	13.80	11.25
TCE2B48S21S	XAHD60G	21.00	1400—1800	1525.00	47.50	34.40	13.80	11.25
TCE2B60S21S	CF/CM60C	21.00	1520—1920	1725.00	56.00	39.00	13.80	11.25
TCE2B60S21S	CF/CM60D	24.50	1520—1920	1725.00	56.00	39.00	13.80	11.25
TCE2B60S21S	CF/CM64D	24.50	1520—1920	1725.00	56.00	39.50	13.80	11.50
TCE2B60S21S	XAF/XAUC60G	21.00	1520—1920	1725.00	56.00	0.00	13.80	11.25
TCE2B60S21S	XAF/XAUD60G	24.50	1520—1920	1725.00	56.00	39.00	13.80	11.25
TCE2B60S21S	XAF/XAUD60H	24.50	1520—1920	1725.00	56.00	39.50	13.80	11.25
TCE2B60S21S	XAFC60H	21.00	1520—1920	1725.00	56.00	39.50	13.80	11.25
TCE2B60S21S	XAHC60G	21.00	1520—1920	1725.00	56.00	39.00	13.80	11.25
TCE2B60S21S	XAHC60H	21.00	1520—1920	1725.00	56.00	39.50	13.80	11.25
TCE2B60S21S	XAHD60G	21.00	1520—1920	1600.00	56.00	38.50	13.80	11.25
TCE2B60S21S	XAHD60H	24.50	1520—1920	1700.00	56.00	39.50	13.80	11.25

Coil only capacity data notes

- For rated condition information, see Air handler capacity data notes.
- Requires a blower time delay unless a standard furnace is equipped with one.
- A cell with no value means not applicable.
- PSC furnaces use coil only ratings.

Furnace capacity - 1.5 ton

Table 8: Furnace capacity - 1.5 ton

Outdoor unit model	Furnace model	Furnace width (in.)	Indoor coil model	Rated CFM	Net cool (MBH)	Sens cool (MBH)	SEER2	EER2
TCE2B18S21S	TL8E060A12UH11	17.50	CF/CM/CU30B	700.00	17.70	13.30	15.25	12.75
TCE2B18S21S	TL8E060A12UH11	14.50	CF/CM30A	675.00	18.00	13.40	15.00	12.50
TCE2B18S21S	TL8E060A12UH11	14.50	XAF/XAUA24B	475.00	17.30	12.00	15.25	12.75
TCE2B18S21S	TL8E060A12UH11	17.50	XAF/XAUB30C	500.00	17.60	12.50	16.00	13.00
TCE2B18S21S	TL8E060A12UH11	17.50	XAFB24B	500.00	17.50	12.30	15.50	12.75
TCE2B18S21S	TL8E060A12UH11	14.50	XAHA24B	475.00	17.30	12.00	15.25	12.75
TCE2B18S21S	TL8E060A12UH11	17.50	XAHB24B	700.00	17.70	13.80	15.25	12.75
TCE2B18S21S	TL8E060A12UH11	17.50	XAHB30C	700.00	17.70	14.10	15.75	13.00
TCE2B18S21S	TL8E080C16UH11	21.00	XAFC30C	725.00	18.00	14.50	16.00	13.25

Table 8: Furnace capacity - 1.5 ton

Outdoor unit model	Furnace model	Furnace width (in.)	Indoor coil model	Rated CFM	Net cool (MBH)	Sens cool (MBH)	SEER2	EER2
TCE2B18S21S	TL8E080C16UH11	21.00	XAHC30C	725.00	18.00	14.50	16.00	13.00
TCE2B18S21S	TL9E060B12UH11	17.50	CF/CM/CU30B	525.00	17.40	12.00	15.00	12.50
TCE2B18S21S	TL9E060B12UH11	21.00	CF/CM30C	525.00	17.40	12.00	15.00	12.50
TCE2B18S21S	TL9E060B12UH11	17.50	XAF/XAUB30C	500.00	17.80	12.70	15.75	12.75
TCE2B18S21S	TL9E060B12UH11	17.50	XAFB24B	500.00	17.50	12.30	15.25	12.75
TCE2B18S21S	TL9E060B12UH11	21.00	XAFC30C	500.00	17.80	12.70	15.75	12.75
TCE2B18S21S	TL9E060B12UH11	17.50	XAHB24B	500.00	17.50	12.30	15.25	12.75
TCE2B18S21S	TL9E060B12UH11	17.50	XAHB30C	500.00	17.80	12.70	15.75	12.75
TCE2B18S21S	TL9E060B12UH11	21.00	XAHC30C	500.00	17.70	12.60	15.75	12.75
TCE2B18S21S	TL9E080C16UH11	21.00	CF/CM30C	725.00	18.00	13.70	15.25	12.75
TCE2B18S21S	TL9E080C16UH11	21.00	XAFC30C	700.00	18.00	14.30	16.00	13.00
TCE2B18S21S	TL9E080C16UH11	21.00	XAHC30C	700.00	18.00	14.30	15.75	13.00
TCE2B18S21S	TM8E040A12MP11	17.50	CF/CM/CU30B	600.00	17.70	12.60	15.50	12.75
TCE2B18S21S	TM8E040A12MP11	14.50	CF/CM30A	550.00	17.60	12.30	15.00	12.50
TCE2B18S21S	TM8E040A12MP11	14.50	XAF/XAUA24B	550.00	17.80	12.90	15.50	12.75
TCE2B18S21S	TM8E040A12MP11	17.50	XAF/XAUB30C	575.00	17.70	13.10	16.00	13.25
TCE2B18S21S	TM8E040A12MP11	17.50	XAFB24B	575.00	17.70	13.00	15.50	12.75
TCE2B18S21S	TM8E040A12MP11	14.50	XAHA24B	550.00	17.80	12.90	15.50	12.75
TCE2B18S21S	TM8E040A12MP11	17.50	XAHB24B	575.00	17.70	13.00	15.50	12.75
TCE2B18S21S	TM8E040A12MP11	17.50	XAHB30C	575.00	17.70	13.10	16.00	13.25
TCE2B18S21S	TM8E060A12MP11	17.50	CF/CM/CU30B	650.00	17.70	13.00	15.25	12.75
TCE2B18S21S	TM8E060A12MP11	14.50	CF/CM30A	625.00	18.00	13.00	15.25	12.75
TCE2B18S21S	TM8E060A12MP11	14.50	XAF/XAUA24B	625.00	18.00	13.50	15.50	12.75
TCE2B18S21S	TM8E060A12MP11	17.50	XAF/XAUB30C	650.00	17.70	13.70	16.00	13.25
TCE2B18S21S	TM8E060A12MP11	17.50	XAFB24B	575.00	17.70	13.00	15.50	12.75
TCE2B18S21S	TM8E060A12MP11	14.50	XAHA24B	550.00	17.70	12.80	15.50	12.75
TCE2B18S21S	TM8E060A12MP11	17.50	XAHB24B	625.00	17.70	13.30	15.50	12.75
TCE2B18S21S	TM8E060A12MP11	17.50	XAHB30C	625.00	17.70	13.50	16.00	13.25
TCE2B18S21S	TM8E080B12MP11	17.50	CF/CM/CU30B	525.00	17.40	12.00	15.00	12.50
TCE2B18S21S	TM8E080B12MP11	21.00	CF/CM30C	550.00	17.60	12.20	15.25	12.75
TCE2B18S21S	TM8E080B12MP11	17.50	XAF/XAUB30C	525.00	17.60	12.70	16.00	13.00
TCE2B18S21S	TM8E080B12MP11	17.50	XAFB24B	525.00	17.60	12.60	15.50	12.75
TCE2B18S21S	TM8E080B12MP11	21.00	XAFC30C	525.00	17.60	12.70	16.00	13.00
TCE2B18S21S	TM8E080B12MP11	17.50	XAHB24B	525.00	17.60	12.60	15.50	12.75
TCE2B18S21S	TM8E080B12MP11	17.50	XAHB30C	525.00	17.60	12.70	16.00	13.00
TCE2B18S21S	TM8E080B12MP11	21.00	XAHC30C	525.00	17.60	12.70	16.00	13.00
TCE2B18S21S	TM8E080C16MP11	21.00	CF/CM30C	575.00	17.80	12.50	15.25	12.75
TCE2B18S21S	TM8E080C16MP11	21.00	XAFC30C	550.00	17.80	13.00	16.00	13.25
TCE2B18S21S	TM8E080C16MP11	21.00	XAHC30C	725.00	18.00	14.50	16.00	13.00
TCE2B18S21S	TM8E100B12MP11	17.50	CF/CM/CU30B	650.00	18.00	13.20	15.25	12.75
TCE2B18S21S	TM8E100B12MP11	21.00	CF/CM30C	675.00	17.70	13.10	15.50	12.75
TCE2B18S21S	TM8E100B12MP11	17.50	XAF/XAUB30C	650.00	18.00	13.90	16.00	13.25
TCE2B18S21S	TM8E100B12MP11	17.50	XAFB24B	650.00	18.00	13.70	15.50	12.75
TCE2B18S21S	TM8E100B12MP11	21.00	XAFC30C	650.00	17.70	13.70	16.00	13.25
TCE2B18S21S	TM8E100B12MP11	17.50	XAHB24B	500.00	17.50	12.30	15.50	12.75
TCE2B18S21S	TM8E100B12MP11	17.50	XAHB30C	625.00	18.00	13.70	15.75	13.00
TCE2B18S21S	TM8E100B12MP11	21.00	XAHC30C	650.00	17.70	13.70	16.00	13.25
TCE2B18S21S	TM8E100C16MP11	21.00	CF/CM30C	725.00	18.00	13.70	15.50	12.75
TCE2B18S21S	TM8E100C16MP11	21.00	XAFC30C	700.00	18.00	14.30	16.00	13.25
TCE2B18S21S	TM8E100C16MP11	21.00	XAHC30C	700.00	18.00	14.30	16.00	13.00
TCE2B18S21S	TM8E120C16MP11	21.00	CF/CM30C	550.00	17.70	12.30	15.25	12.75
TCE2B18S21S	TM8E120C16MP11	21.00	XAFC30C	725.00	18.00	14.50	16.00	13.25
TCE2B18S21S	TM8E120C16MP11	21.00	XAHC30C	700.00	18.00	14.30	16.00	13.25
TCE2B18S21S	TM8V060A12MP12C	17.50	CF/CM/CU30B	575.00	17.60	12.40	15.25	12.75
TCE2B18S21S	TM8V060A12MP12C	14.50	CF/CM30A	575.00	17.60	12.40	15.00	12.50
TCE2B18S21S	TM8V060A12MP12C	14.50	XAF/XAUA24B	575.00	17.80	13.10	15.25	12.75
TCE2B18S21S	TM8V060A12MP12C	17.50	XAF/XAUB30C	575.00	17.70	13.10	16.00	13.25
TCE2B18S21S	TM8V060A12MP12C	17.50	XAFB24B	575.00	17.70	13.00	15.50	12.75
TCE2B18S21S	TM8V060A12MP12C	14.50	XAHA24B	575.00	17.80	13.10	15.25	12.75
TCE2B18S21S	TM8V060A12MP12C	17.50	XAHB24B	575.00	17.70	13.00	15.50	12.75
TCE2B18S21S	TM8V060A12MP12C	17.50	XAHB30C	575.00	17.70	13.10	16.00	13.25
TCE2B18S21S	TM8V080B12MP12C	17.50	CF/CM/CU30B	625.00	17.90	13.00	15.00	12.50
TCE2B18S21S	TM8V080B12MP12C	21.00	CF/CM30C	625.00	17.70	12.80	15.00	12.50

Table 8: Furnace capacity - 1.5 ton

Outdoor unit model	Furnace model	Furnace width (in.)	Indoor coil model	Rated CFM	Net cool (MBH)	Sens cool (MBH)	SEER2	EER2
TCE2B18S21S	TM8V080B12MP12C	17.50	XAF/XAUB30C	550.00	17.80	13.00	15.75	12.75
TCE2B18S21S	TM8V080B12MP12C	17.50	XAFB24B	550.00	17.70	12.80	15.25	12.75
TCE2B18S21S	TM8V080B12MP12C	21.00	XAFC30C	625.00	17.70	13.50	15.75	12.75
TCE2B18S21S	TM8V080B12MP12C	17.50	XAHB24B	550.00	17.70	12.90	15.25	12.75
TCE2B18S21S	TM8V080B12MP12C	17.50	XAHB30C	625.00	18.00	13.80	15.50	12.75
TCE2B18S21S	TM8V080B12MP12C	21.00	XAHC30C	625.00	17.70	13.50	15.75	12.75
TCE2B18S21S	TM8Y060A12MP11	17.50	CF/CM/CU30B	575.00	17.70	12.50	15.25	12.75
TCE2B18S21S	TM8Y060A12MP11	14.50	CF/CM30A	550.00	17.60	12.30	15.00	12.50
TCE2B18S21S	TM8Y060A12MP11	14.50	XAF/XAUA24B	550.00	17.70	12.80	15.25	12.75
TCE2B18S21S	TM8Y060A12MP11	17.50	XAF/XAUB30C	575.00	17.70	13.10	16.00	13.25
TCE2B18S21S	TM8Y060A12MP11	17.50	XAFB24B	650.00	17.70	13.50	15.50	12.75
TCE2B18S21S	TM8Y060A12MP11	14.50	XAHA24B	550.00	17.70	12.80	15.25	12.75
TCE2B18S21S	TM8Y060A12MP11	17.50	XAHB24B	550.00	17.70	12.80	15.25	12.75
TCE2B18S21S	TM8Y060A12MP11	17.50	XAHB30C	550.00	17.70	13.00	15.75	12.75
TCE2B18S21S	TM8Y080B12MP11	17.50	CF/CM/CU30B	675.00	18.00	13.30	15.25	12.75
TCE2B18S21S	TM8Y080B12MP11	21.00	CF/CM30C	675.00	17.70	13.10	15.50	12.75
TCE2B18S21S	TM8Y080B12MP11	17.50	XAF/XAUB30C	675.00	18.00	14.10	16.00	13.25
TCE2B18S21S	TM8Y080B12MP11	17.50	XAFB24B	575.00	17.80	13.10	15.50	12.75
TCE2B18S21S	TM8Y080B12MP11	21.00	XAFC30C	675.00	17.70	13.90	16.00	13.25
TCE2B18S21S	TM8Y080B12MP11	17.50	XAHB24B	575.00	17.80	13.10	15.50	12.75
TCE2B18S21S	TM8Y080B12MP11	17.50	XAHB30C	575.00	17.80	13.20	16.00	13.25
TCE2B18S21S	TM8Y080B12MP11	21.00	XAHC30C	575.00	17.70	13.10	16.00	13.25
TCE2B18S21S	TM8Y080C16MP11	21.00	XAFC30C	500.00	17.60	12.50	16.00	13.00
TCE2B18S21S	TM8Y080C16MP11	21.00	XAHC30C	475.00	17.80	12.50	15.75	12.75
TCE2B18S21S	TM8Y100C16MP11	21.00	XAFC30C	500.00	17.60	12.50	16.00	13.00
TCE2B18S21S	TM8Y100C16MP11	21.00	XAHC30C	475.00	17.80	12.50	15.75	12.75
TCE2B18S21S	TM9E026A08MP12	17.50	CF/CM/CU30B	575.00	17.60	12.50	14.75	12.50
TCE2B18S21S	TM9E026A08MP12	14.50	CF/CM30A	550.00	17.40	12.20	14.75	12.50
TCE2B18S21S	TM9E026A08MP12	14.50	XAF/XAUA24B	450.00	17.20	11.80	15.00	12.50
TCE2B18S21S	TM9E026A08MP12	17.50	XAF/XAUB30C	575.00	17.80	13.20	15.75	12.75
TCE2B18S21S	TM9E026A08MP12	17.50	XAFB24B	550.00	17.70	12.90	15.00	12.50
TCE2B18S21S	TM9E026A08MP12	14.50	XAHA24B	550.00	17.70	12.90	15.00	12.50
TCE2B18S21S	TM9E026A08MP12	17.50	XAHB24B	450.00	17.20	11.80	15.00	12.50
TCE2B18S21S	TM9E026A08MP12	17.50	XAHB30C	550.00	17.80	13.10	15.50	12.75
TCE2B18S21S	TM9E040A10MP12	17.50	CF/CM/CU30B	500.00	17.20	11.70	15.00	12.50
TCE2B18S21S	TM9E040A10MP12	14.50	CF/CM30A	525.00	17.30	11.90	14.75	12.50
TCE2B18S21S	TM9E040A10MP12	14.50	XAF/XAUA24B	475.00	17.30	12.00	15.00	12.50
TCE2B18S21S	TM9E040A10MP12	17.50	XAF/XAUB30C	550.00	17.80	13.10	15.75	12.75
TCE2B18S21S	TM9E040A10MP12	17.50	XAFB24B	550.00	17.70	12.80	15.25	12.75
TCE2B18S21S	TM9E040A10MP12	14.50	XAHA24B	475.00	17.30	12.00	15.00	12.50
TCE2B18S21S	TM9E040A10MP12	17.50	XAHB24B	550.00	17.70	12.80	15.25	12.75
TCE2B18S21S	TM9E040A10MP12	17.50	XAHB30C	550.00	17.80	13.10	15.75	12.75
TCE2B18S21S	TM9E060A10MP12	17.50	CF/CM/CU30B	525.00	17.40	12.00	15.00	12.50
TCE2B18S21S	TM9E060A10MP12	14.50	CF/CM30A	525.00	17.40	12.00	14.75	12.50
TCE2B18S21S	TM9E060A10MP12	14.50	XAF/XAUA24B	500.00	17.40	12.30	15.00	12.50
TCE2B18S21S	TM9E060A10MP12	17.50	XAF/XAUB30C	525.00	17.60	12.70	15.75	12.75
TCE2B18S21S	TM9E060A10MP12	17.50	XAFB24B	525.00	17.60	12.60	15.25	12.75
TCE2B18S21S	TM9E060A10MP12	14.50	XAHA24B	500.00	17.40	12.30	15.00	12.50
TCE2B18S21S	TM9E060A10MP12	17.50	XAHB24B	525.00	17.60	12.60	15.25	12.75
TCE2B18S21S	TM9E060A10MP12	17.50	XAHB30C	525.00	17.60	12.70	15.75	12.75
TCE2B18S21S	TM9E060B12MP12	17.50	CF/CM/CU30B	575.00	17.60	12.40	15.00	12.50
TCE2B18S21S	TM9E060B12MP12	21.00	CF/CM30C	575.00	17.60	12.40	15.00	12.50
TCE2B18S21S	TM9E060B12MP12	17.50	XAF/XAUB30C	575.00	17.80	13.20	15.75	12.75
TCE2B18S21S	TM9E060B12MP12	17.50	XAFB24B	550.00	17.70	12.80	15.25	12.75
TCE2B18S21S	TM9E060B12MP12	21.00	XAFC30C	550.00	17.80	13.10	15.75	12.75
TCE2B18S21S	TM9E060B12MP12	17.50	XAHB24B	550.00	17.70	12.80	15.25	12.75
TCE2B18S21S	TM9E060B12MP12	17.50	XAHB30C	550.00	17.80	13.10	15.75	12.75
TCE2B18S21S	TM9E060B12MP12	21.00	XAHC30C	550.00	17.70	13.00	15.75	12.75
TCE2B18S21S	TM9E080B12MP12	17.50	CF/CM/CU30B	600.00	17.90	12.80	15.00	12.50
TCE2B18S21S	TM9E080B12MP12	21.00	CF/CM30C	625.00	17.70	12.80	15.25	12.75
TCE2B18S21S	TM9E080B12MP12	17.50	XAF/XAUB30C	600.00	18.00	13.60	16.00	13.00
TCE2B18S21S	TM9E080B12MP12	17.50	XAFB24B	600.00	18.00	13.40	15.25	12.75
TCE2B18S21S	TM9E080B12MP12	21.00	XAFC30C	600.00	17.70	13.30	16.00	13.00

Table 8: Furnace capacity - 1.5 ton

Outdoor unit model	Furnace model	Furnace width (in.)	Indoor coil model	Rated CFM	Net cool (MBH)	Sens cool (MBH)	SEER2	EER2
TCE2B18S21S	TM9E080B12MP12	17.50	XAHB24B	575.00	17.80	13.10	15.25	12.75
TCE2B18S21S	TM9E080B12MP12	17.50	XAHB30C	575.00	17.80	13.20	15.75	12.75
TCE2B18S21S	TM9E080B12MP12	21.00	XAHC30C	600.00	17.70	13.30	15.75	13.00
TCE2B18S21S	TM9E080C16MP12	21.00	CF/CM30C	725.00	18.00	13.70	15.50	12.75
TCE2B18S21S	TM9E080C16MP12	21.00	XAFC30C	700.00	18.00	14.30	16.00	13.25
TCE2B18S21S	TM9E080C16MP12	21.00	XAHC30C	675.00	18.00	14.10	15.75	13.00
TCE2B18S21S	TM9E100C16MP12	21.00	CF/CM30C	525.00	17.50	12.00	15.00	12.50
TCE2B18S21S	TM9E100C16MP12	21.00	XAFC30C	725.00	18.00	14.50	15.75	13.00
TCE2B18S21S	TM9E100C16MP12	21.00	XAHC30C	725.00	18.00	14.50	15.75	13.00
TCE2B18S21S	TM9V040A10MP12C	17.50	CF/CM/CU30B	525.00	17.30	11.90	14.75	12.50
TCE2B18S21S	TM9V040A10MP12C	14.50	CF/CM30A	525.00	17.30	11.90	14.75	12.50
TCE2B18S21S	TM9V040A10MP12C	14.50	XAF/XAUA24B	525.00	17.60	12.60	15.00	12.50
TCE2B18S21S	TM9V040A10MP12C	17.50	XAF/XAUB30C	525.00	17.60	12.70	15.50	12.75
TCE2B18S21S	TM9V040A10MP12C	17.50	XAFB24B	525.00	17.60	12.60	15.00	12.50
TCE2B18S21S	TM9V040A10MP12C	14.50	XAHA24B	525.00	17.50	12.60	15.00	12.50
TCE2B18S21S	TM9V040A10MP12C	17.50	XAHB24B	525.00	17.60	12.60	15.00	12.50
TCE2B18S21S	TM9V040A10MP12C	17.50	XAHB30C	525.00	17.80	12.90	15.50	12.75
TCE2B18S21S	TM9V060B12MP12C	17.50	CF/CM/CU30B	550.00	17.60	12.30	15.00	12.50
TCE2B18S21S	TM9V060B12MP12C	21.00	CF/CM30C	600.00	17.70	12.70	15.00	12.50
TCE2B18S21S	TM9V060B12MP12C	17.50	XAF/XAUB30C	550.00	17.80	13.00	15.75	12.75
TCE2B18S21S	TM9V060B12MP12C	17.50	XAFB24B	550.00	17.70	12.80	15.25	12.75
TCE2B18S21S	TM9V060B12MP12C	21.00	XAFC30C	550.00	17.70	13.00	15.75	12.75
TCE2B18S21S	TM9V060B12MP12C	17.50	XAHB24B	550.00	17.70	12.80	15.25	12.75
TCE2B18S21S	TM9V060B12MP12C	17.50	XAHB30C	550.00	17.80	13.10	15.75	12.75
TCE2B18S21S	TM9V060B12MP12C	21.00	XAHC30C	550.00	17.70	13.00	15.75	12.75
TCE2B18S21S	TM9V080B12MP12C	17.50	CF/CM/CU30B	700.00	18.00	13.50	15.25	12.75
TCE2B18S21S	TM9V080B12MP12C	21.00	CF/CM30C	700.00	17.70	13.30	15.25	12.75
TCE2B18S21S	TM9V080B12MP12C	17.50	XAF/XAUB30C	575.00	17.80	13.20	16.00	13.25
TCE2B18S21S	TM9V080B12MP12C	17.50	XAFB24B	575.00	17.80	13.10	15.50	12.75
TCE2B18S21S	TM9V080B12MP12C	21.00	XAFC30C	575.00	17.70	13.10	16.00	13.25
TCE2B18S21S	TM9V080B12MP12C	17.50	XAHB24B	575.00	17.80	13.10	15.25	12.75
TCE2B18S21S	TM9V080B12MP12C	17.50	XAHB30C	575.00	17.80	13.20	16.00	13.00
TCE2B18S21S	TM9V080B12MP12C	21.00	XAHC30C	575.00	17.70	13.10	16.00	13.25
TCE2B18S21S	TM9Y040A10MP11	17.50	CF/CM/CU30B	600.00	17.70	12.70	14.50	12.25
TCE2B18S21S	TM9Y040A10MP11	14.50	CF/CM30A	575.00	17.60	12.50	14.50	12.25
TCE2B18S21S	TM9Y040A10MP11	14.50	XAF/XAUA24B	575.00	17.70	13.10	14.75	12.50
TCE2B18S21S	TM9Y040A10MP11	17.50	XAF/XAUB30C	600.00	17.70	13.40	15.50	12.75
TCE2B18S21S	TM9Y040A10MP11	17.50	XAFB24B	575.00	17.70	13.10	14.75	12.50
TCE2B18S21S	TM9Y040A10MP11	14.50	XAHA24B	575.00	17.70	13.10	14.75	12.50
TCE2B18S21S	TM9Y040A10MP11	17.50	XAHB24B	575.00	17.70	13.10	14.75	12.50
TCE2B18S21S	TM9Y040A10MP11	17.50	XAHB30C	575.00	17.70	13.20	15.25	12.75
TCE2B18S21S	TM9Y060B12MP11	17.50	CF/CM/CU30B	500.00	17.20	11.70	15.00	12.50
TCE2B18S21S	TM9Y060B12MP11	21.00	CF/CM30C	525.00	17.40	12.00	15.00	12.50
TCE2B18S21S	TM9Y060B12MP11	17.50	XAF/XAUB30C	500.00	17.80	12.70	15.75	12.75
TCE2B18S21S	TM9Y060B12MP11	17.50	XAFB24B	500.00	17.50	12.30	15.25	12.75
TCE2B18S21S	TM9Y060B12MP11	21.00	XAFC30C	500.00	17.70	12.60	15.75	12.75
TCE2B18S21S	TM9Y060B12MP11	17.50	XAHB24B	500.00	17.50	12.30	15.25	12.75
TCE2B18S21S	TM9Y060B12MP11	17.50	XAHB30C	500.00	17.80	12.70	15.75	12.75
TCE2B18S21S	TM9Y060B12MP11	21.00	XAHC30C	500.00	17.70	12.60	15.75	12.75
TCE2B18S21S	TM9Y080B12MP11	17.50	CF/CM/CU30B	525.00	17.40	12.00	15.00	12.50
TCE2B18S21S	TM9Y080B12MP11	21.00	CF/CM30C	525.00	17.40	12.00	15.00	12.50
TCE2B18S21S	TM9Y080B12MP11	17.50	XAF/XAUB30C	525.00	17.60	12.70	16.00	13.00
TCE2B18S21S	TM9Y080B12MP11	17.50	XAFB24B	525.00	17.60	12.60	15.50	12.75
TCE2B18S21S	TM9Y080B12MP11	21.00	XAFC30C	525.00	17.60	12.70	16.00	13.00
TCE2B18S21S	TM9Y080B12MP11	17.50	XAHB24B	500.00	17.50	12.30	15.25	12.75
TCE2B18S21S	TM9Y080B12MP11	17.50	XAHB30C	500.00	17.80	12.70	15.75	12.75
TCE2B18S21S	TM9Y080B12MP11	21.00	XAHC30C	500.00	17.70	12.60	15.75	12.75
TCE2B18S21S	TMLE040A12MP11	17.50	CF/CM/CU30B	600.00	17.70	12.60	15.50	12.75
TCE2B18S21S	TMLE040A12MP11	14.50	CF/CM30A	550.00	17.60	12.30	15.00	12.50
TCE2B18S21S	TMLE040A12MP11	14.50	XAF/XAUA24B	550.00	17.80	12.90	15.50	12.75
TCE2B18S21S	TMLE040A12MP11	17.50	XAF/XAUB30C	575.00	17.70	13.10	16.00	13.25
TCE2B18S21S	TMLE040A12MP11	17.50	XAFB24B	575.00	17.70	13.00	15.50	12.75
TCE2B18S21S	TMLE040A12MP11	14.50	XAHA24B	550.00	17.80	12.90	15.50	12.75

Table 8: Furnace capacity - 1.5 ton

Outdoor unit model	Furnace model	Furnace width (in.)	Indoor coil model	Rated CFM	Net cool (MBH)	Sens cool (MBH)	SEER2	EER2
TCE2B18S21S	TMLE040A12MP11	17.50	XAHB24B	575.00	17.70	13.00	15.50	12.75
TCE2B18S21S	TMLE040A12MP11	17.50	XAHB30C	575.00	17.70	13.10	16.00	13.25
TCE2B18S21S	TMLE060A12MP11	17.50	CF/CM/CU30B	650.00	17.70	13.00	15.25	12.75
TCE2B18S21S	TMLE060A12MP11	14.50	CF/CM30A	625.00	18.00	13.00	15.25	12.75
TCE2B18S21S	TMLE060A12MP11	14.50	XAF/XAUA24B	625.00	18.00	13.50	15.50	12.75
TCE2B18S21S	TMLE060A12MP11	17.50	XAF/XAUB30C	650.00	17.70	13.70	16.00	13.25
TCE2B18S21S	TMLE060A12MP11	17.50	XAFB24B	575.00	17.70	13.00	15.50	12.75
TCE2B18S21S	TMLE060A12MP11	14.50	XAHA24B	550.00	17.70	12.80	15.50	12.75
TCE2B18S21S	TMLE060A12MP11	17.50	XAHB24B	625.00	17.70	13.30	15.50	12.75
TCE2B18S21S	TMLE060A12MP11	17.50	XAHB30C	625.00	17.70	13.50	16.00	13.25
TCE2B18S21S	TMLE080B12MP11	17.50	CF/CM/CU30B	525.00	17.40	12.00	15.00	12.50
TCE2B18S21S	TMLE080B12MP11	21.00	CF/CM30C	550.00	17.60	12.20	15.25	12.75
TCE2B18S21S	TMLE080B12MP11	17.50	XAF/XAUB30C	525.00	17.60	12.70	16.00	13.00
TCE2B18S21S	TMLE080B12MP11	17.50	XAFB24B	525.00	17.60	12.60	15.50	12.75
TCE2B18S21S	TMLE080B12MP11	21.00	XAFC30C	525.00	17.60	12.70	16.00	13.00
TCE2B18S21S	TMLE080B12MP11	17.50	XAHB24B	525.00	17.60	12.60	15.50	12.75
TCE2B18S21S	TMLE080B12MP11	17.50	XAHB30C	525.00	17.60	12.70	16.00	13.00
TCE2B18S21S	TMLE080B12MP11	21.00	XAHC30C	525.00	17.60	12.70	16.00	13.00
TCE2B18S21S	TMLE080C16MP11	21.00	CF/CM30C	575.00	17.80	12.50	15.25	12.75
TCE2B18S21S	TMLE080C16MP11	21.00	XAFC30C	550.00	17.80	13.00	16.00	13.25
TCE2B18S21S	TMLE080C16MP11	21.00	XAHC30C	725.00	18.00	14.50	16.00	13.00
TCE2B18S21S	TMLE100B12MP11	17.50	CF/CM/CU30B	650.00	18.00	13.20	15.25	12.75
TCE2B18S21S	TMLE100B12MP11	21.00	CF/CM30C	675.00	17.70	13.10	15.50	12.75
TCE2B18S21S	TMLE100B12MP11	17.50	XAF/XAUB30C	650.00	18.00	13.90	16.00	13.25
TCE2B18S21S	TMLE100B12MP11	17.50	XAFB24B	650.00	18.00	13.70	15.50	12.75
TCE2B18S21S	TMLE100B12MP11	21.00	XAFC30C	650.00	17.70	13.70	16.00	13.25
TCE2B18S21S	TMLE100B12MP11	17.50	XAHB24B	500.00	17.50	12.30	15.50	12.75
TCE2B18S21S	TMLE100B12MP11	17.50	XAHB30C	625.00	18.00	13.70	15.75	13.00
TCE2B18S21S	TMLE100B12MP11	21.00	XAHC30C	650.00	17.70	13.70	16.00	13.25
TCE2B18S21S	TMLE100C16MP11	21.00	CF/CM30C	725.00	18.00	13.70	15.50	12.75
TCE2B18S21S	TMLE100C16MP11	21.00	XAFC30C	700.00	18.00	14.30	16.00	13.25
TCE2B18S21S	TMLE100C16MP11	21.00	XAHC30C	700.00	18.00	14.30	16.00	13.00
TCE2B18S21S	TMLE120C16MP11	21.00	CF/CM30C	550.00	17.70	12.30	15.25	12.75
TCE2B18S21S	TMLE120C16MP11	21.00	XAFC30C	725.00	18.00	14.50	16.00	13.25
TCE2B18S21S	TMLE120C16MP11	21.00	XAHC30C	700.00	18.00	14.30	16.00	13.25
TCE2B18S21S	TMLV060A12MP12C	17.50	CF/CM/CU30B	575.00	17.60	12.40	15.25	12.75
TCE2B18S21S	TMLV060A12MP12C	14.50	CF/CM30A	575.00	17.60	12.40	15.00	12.50
TCE2B18S21S	TMLV060A12MP12C	14.50	XAF/XAUA24B	575.00	17.80	13.10	15.25	12.75
TCE2B18S21S	TMLV060A12MP12C	17.50	XAF/XAUB30C	575.00	17.70	13.10	16.00	13.25
TCE2B18S21S	TMLV060A12MP12C	17.50	XAFB24B	575.00	17.70	13.00	15.50	12.75
TCE2B18S21S	TMLV060A12MP12C	14.50	XAHA24B	575.00	17.80	13.10	15.25	12.75
TCE2B18S21S	TMLV060A12MP12C	17.50	XAHB24B	575.00	17.70	13.00	15.50	12.75
TCE2B18S21S	TMLV060A12MP12C	17.50	XAHB30C	575.00	17.70	13.10	16.00	13.25
TCE2B18S21S	TP9C060B12MP13C	17.50	CF/CM/CU30B	550.00	17.60	12.30	15.00	12.50
TCE2B18S21S	TP9C060B12MP13C	21.00	CF/CM30C	600.00	17.70	12.70	15.00	12.50
TCE2B18S21S	TP9C060B12MP13C	17.50	XAF/XAUB30C	550.00	17.80	13.00	15.75	12.75
TCE2B18S21S	TP9C060B12MP13C	17.50	XAFB24B	550.00	17.70	12.80	15.25	12.75
TCE2B18S21S	TP9C060B12MP13C	21.00	XAFC30C	550.00	17.70	13.00	15.75	12.75
TCE2B18S21S	TP9C060B12MP13C	17.50	XAHB24B	550.00	17.70	12.80	15.25	12.75
TCE2B18S21S	TP9C060B12MP13C	17.50	XAHB30C	550.00	17.80	13.10	15.75	12.75
TCE2B18S21S	TP9C060B12MP13C	21.00	XAHC30C	550.00	17.70	13.00	15.75	12.75
TCE2B18S21S	TP9C080B12MP13C	17.50	CF/CM/CU30B	700.00	18.00	13.50	15.25	12.75
TCE2B18S21S	TP9C080B12MP13C	21.00	CF/CM30C	700.00	17.70	13.30	15.25	12.75
TCE2B18S21S	TP9C080B12MP13C	17.50	XAF/XAUB30C	575.00	17.80	13.20	16.00	13.25
TCE2B18S21S	TP9C080B12MP13C	17.50	XAFB24B	575.00	17.80	13.10	15.50	12.75
TCE2B18S21S	TP9C080B12MP13C	21.00	XAFC30C	575.00	17.70	13.10	16.00	13.25
TCE2B18S21S	TP9C080B12MP13C	17.50	XAHB24B	575.00	17.80	13.10	15.25	12.75
TCE2B18S21S	TP9C080B12MP13C	17.50	XAHB30C	575.00	17.80	13.20	16.00	13.00
TCE2B18S21S	TP9C080B12MP13C	21.00	XAHC30C	575.00	17.70	13.10	16.00	13.25
TCE2B18S21S	TPLC060A12MP13C	17.50	CF/CM/CU30B	575.00	17.60	12.40	15.25	12.75
TCE2B18S21S	TPLC060A12MP13C	14.50	CF/CM30A	575.00	17.60	12.40	15.00	12.50
TCE2B18S21S	TPLC060A12MP13C	14.50	XAF/XAUA24B	575.00	17.80	13.10	15.25	12.75
TCE2B18S21S	TPLC060A12MP13C	17.50	XAF/XAUB30C	575.00	17.70	13.10	16.00	13.25

Table 8: Furnace capacity - 1.5 ton

Outdoor unit model	Furnace model	Furnace width (in.)	Indoor coil model	Rated CFM	Net cool (MBH)	Sens cool (MBH)	SEER2	EER2
TCE2B18S21S	TPLC060A12MP13C	17.50	XAFB24B	575.00	17.70	13.00	15.50	12.75
TCE2B18S21S	TPLC060A12MP13C	14.50	XAHA24B	575.00	17.80	13.10	15.25	12.75
TCE2B18S21S	TPLC060A12MP13C	17.50	XAHB24B	575.00	17.70	13.00	15.50	12.75
TCE2B18S21S	TPLC060A12MP13C	17.50	XAHB30C	575.00	17.70	13.10	16.00	13.25
TCE2B18S21S	TPLC080B12MP13C	17.50	CF/CM/CU30B	625.00	17.90	13.00	15.00	12.50
TCE2B18S21S	TPLC080B12MP13C	21.00	CF/CM30C	625.00	17.70	12.80	15.00	12.50
TCE2B18S21S	TPLC080B12MP13C	17.50	XAF/XAUB30C	550.00	17.80	13.00	15.75	12.75
TCE2B18S21S	TPLC080B12MP13C	17.50	XAFB24B	550.00	17.70	12.80	15.25	12.75
TCE2B18S21S	TPLC080B12MP13C	21.00	XAFC30C	625.00	17.70	13.50	15.75	12.75
TCE2B18S21S	TPLC080B12MP13C	17.50	XAHB24B	550.00	17.70	12.90	15.25	12.75
TCE2B18S21S	TPLC080B12MP13C	17.50	XAHB30C	625.00	18.00	13.80	15.50	12.75
TCE2B18S21S	TPLC080B12MP13C	21.00	XAHC30C	625.00	17.70	13.50	15.75	12.75
TCE2B18S21S	CP9C060B12MP13C	17.50	CF/CM/CU30B	550.00	17.60	12.30	15.00	12.50
TCE2B18S21S	CP9C060B12MP13C	21.00	CF/CM30C	600.00	17.70	12.70	15.00	12.50
TCE2B18S21S	CP9C060B12MP13C	17.50	XAF/XAUB30C	550.00	17.80	13.00	15.75	12.75
TCE2B18S21S	CP9C060B12MP13C	17.50	XAFB24B	550.00	17.70	12.80	15.25	12.75
TCE2B18S21S	CP9C060B12MP13C	21.00	XAFC30C	550.00	17.70	13.00	15.75	12.75
TCE2B18S21S	CP9C060B12MP13C	17.50	XAHB24B	550.00	17.70	12.80	15.25	12.75
TCE2B18S21S	CP9C060B12MP13C	17.50	XAHB30C	550.00	17.80	13.10	15.75	12.75
TCE2B18S21S	CP9C060B12MP13C	21.00	XAHC30C	550.00	17.70	13.00	15.75	12.75
TCE2B18S21S	CP9C080B12MP13C	17.50	CF/CM/CU30B	700.00	18.00	13.50	15.25	12.75
TCE2B18S21S	CP9C080B12MP13C	21.00	CF/CM30C	700.00	17.70	13.30	15.25	12.75
TCE2B18S21S	CP9C080B12MP13C	17.50	XAF/XAUB30C	575.00	17.80	13.20	16.00	13.25
TCE2B18S21S	CP9C080B12MP13C	17.50	XAFB24B	575.00	17.80	13.10	15.50	12.75
TCE2B18S21S	CP9C080B12MP13C	21.00	XAFC30C	575.00	17.70	13.10	16.00	13.25
TCE2B18S21S	CP9C080B12MP13C	17.50	XAHB24B	575.00	17.80	13.10	15.25	12.75
TCE2B18S21S	CP9C080B12MP13C	17.50	XAHB30C	575.00	17.80	13.20	16.00	13.00
TCE2B18S21S	CP9C080B12MP13C	21.00	XAHC30C	575.00	17.70	13.10	16.00	13.25
TCE2B18S21S	CPLC060A12MP13C	17.50	CF/CM/CU30B	575.00	17.60	12.40	15.25	12.75
TCE2B18S21S	CPLC060A12MP13C	14.50	CF/CM30A	575.00	17.60	12.40	15.00	12.50
TCE2B18S21S	CPLC060A12MP13C	14.50	XAF/XAUA24B	575.00	17.80	13.10	15.25	12.75
TCE2B18S21S	CPLC060A12MP13C	17.50	XAF/XAUB30C	575.00	17.70	13.10	16.00	13.25
TCE2B18S21S	CPLC060A12MP13C	17.50	XAFB24B	575.00	17.70	13.00	15.50	12.75
TCE2B18S21S	CPLC060A12MP13C	14.50	XAHA24B	575.00	17.80	13.10	15.25	12.75
TCE2B18S21S	CPLC060A12MP13C	17.50	XAHB24B	575.00	17.70	13.00	15.50	12.75
TCE2B18S21S	CPLC060A12MP13C	17.50	XAHB30C	575.00	17.70	13.10	16.00	13.25
TCE2B18S21S	CPLC080B12MP13C	17.50	CF/CM/CU30B	625.00	17.90	13.00	15.00	12.50
TCE2B18S21S	CPLC080B12MP13C	21.00	CF/CM30C	625.00	17.70	12.80	15.00	12.50
TCE2B18S21S	CPLC080B12MP13C	17.50	XAF/XAUB30C	550.00	17.80	13.00	15.75	12.75
TCE2B18S21S	CPLC080B12MP13C	17.50	XAFB24B	550.00	17.70	12.80	15.25	12.75
TCE2B18S21S	CPLC080B12MP13C	21.00	XAFC30C	625.00	17.70	13.50	15.75	12.75
TCE2B18S21S	CPLC080B12MP13C	17.50	XAHB24B	550.00	17.70	12.90	15.25	12.75
TCE2B18S21S	CPLC080B12MP13C	17.50	XAHB30C	625.00	18.00	13.80	15.50	12.75
TCE2B18S21S	CPLC080B12MP13C	21.00	XAHC30C	625.00	17.70	13.50	15.75	12.75

Furnace capacity - 2 ton

Table 9: Furnace capacity - 2 ton

Outdoor unit model	Furnace model	Furnace width (in.)	Indoor coil model	Rated CFM	Net cool (MBH)	Sens cool (MBH)	SEER2	EER2
TCE2B24S21S	TL8E060A12UH11	17.50	CF/CM/CU30B	700.00	23.20	16.00	15.00	12.50
TCE2B24S21S	TL8E060A12UH11	14.50	CF/CM30A	675.00	23.00	15.70	15.00	12.50
TCE2B24S21S	TL8E060A12UH11	14.50	XAF/XAUA24B	675.00	23.00	16.20	15.25	12.75
TCE2B24S21S	TL8E060A12UH11	17.50	XAF/XAUB30C	700.00	23.60	16.90	15.75	13.00
TCE2B24S21S	TL8E060A12UH11	17.50	XAFB24B	700.00	23.20	16.50	15.25	12.75
TCE2B24S21S	TL8E060A12UH11	14.50	XAHA24B	675.00	23.00	16.20	15.00	12.50
TCE2B24S21S	TL8E060A12UH11	17.50	XAHB24B	700.00	23.20	16.50	15.25	12.75
TCE2B24S21S	TL8E060A12UH11	17.50	XAHB30C	700.00	23.60	16.90	15.75	13.00
TCE2B24S21S	TL8E080C16UH11	21.00	CF/CM30C	750.00	23.40	16.40	15.50	12.75
TCE2B24S21S	TL8E080C16UH11	21.00	XAFC30C	725.00	24.00	17.40	15.75	13.00
TCE2B24S21S	TL8E080C16UH11	21.00	XAHC30C	725.00	24.00	17.40	15.75	13.00

Table 9: Furnace capacity - 2 ton

Outdoor unit model	Furnace model	Furnace width (in.)	Indoor coil model	Rated CFM	Net cool (MBH)	Sens cool (MBH)	SEER2	EER2
TCE2B24S21S	TL8E100C20UH11	21.00	CF/CM30C	850.00	24.00	17.50	15.75	12.75
TCE2B24S21S	TL8E100C20UH11	21.00	XAFC30C	825.00	24.00	18.10	16.00	13.00
TCE2B24S21S	TL8E100C20UH11	21.00	XAHC30C	800.00	24.00	17.90	16.00	13.00
TCE2B24S21S	TL9E060B12UH11	17.50	CF/CM/CU30B	725.00	23.20	16.20	15.00	12.50
TCE2B24S21S	TL9E060B12UH11	21.00	CF/CM30C	725.00	23.20	16.20	15.00	12.50
TCE2B24S21S	TL9E060B12UH11	17.50	XAF/XAUB30C	725.00	23.80	17.30	15.50	12.75
TCE2B24S21S	TL9E060B12UH11	17.50	XAFB24B	725.00	23.40	16.80	15.00	12.50
TCE2B24S21S	TL9E060B12UH11	21.00	XAFC30C	725.00	23.60	17.20	15.50	12.75
TCE2B24S21S	TL9E060B12UH11	17.50	XAHB24B	700.00	23.20	16.50	15.00	12.50
TCE2B24S21S	TL9E060B12UH11	17.50	XAHB30C	700.00	23.60	17.00	15.25	12.75
TCE2B24S21S	TL9E060B12UH11	21.00	XAHC30C	725.00	23.60	17.20	15.50	12.75
TCE2B24S21S	TL9E080C16UH11	21.00	CF/CM30C	725.00	23.40	16.30	15.25	12.50
TCE2B24S21S	TL9E080C16UH11	21.00	XAFC30C	700.00	23.80	17.10	15.75	13.00
TCE2B24S21S	TL9E080C16UH11	21.00	XAHC30C	700.00	23.80	17.10	15.75	13.00
TCE2B24S21S	TL9E100C20UH11	21.00	CF/CM30C	950.00	23.80	18.00	15.50	12.75
TCE2B24S21S	TL9E100C20UH11	21.00	XAFC30C	925.00	23.80	18.80	15.75	13.00
TCE2B24S21S	TL9E100C20UH11	21.00	XAHC30C	900.00	23.80	18.60	15.75	13.00
TCE2B24S21S	TM8E040A12MP11	17.50	CF/CM/CU30B	725.00	23.40	16.30	15.25	12.50
TCE2B24S21S	TM8E040A12MP11	14.50	CF/CM30A	700.00	23.20	16.00	15.00	12.50
TCE2B24S21S	TM8E040A12MP11	14.50	XAF/XAUA24B	700.00	23.20	16.50	15.25	12.75
TCE2B24S21S	TM8E040A12MP11	17.50	XAF/XAUB30C	725.00	23.60	17.10	15.75	13.00
TCE2B24S21S	TM8E040A12MP11	17.50	XAFB24B	725.00	23.40	16.70	15.50	12.75
TCE2B24S21S	TM8E040A12MP11	14.50	XAHA24B	700.00	23.20	16.50	15.25	12.75
TCE2B24S21S	TM8E040A12MP11	17.50	XAHB24B	725.00	23.40	16.80	15.50	12.75
TCE2B24S21S	TM8E040A12MP11	17.50	XAHB30C	725.00	23.60	17.10	15.75	13.00
TCE2B24S21S	TM8E060A12MP11	17.50	CF/CM/CU30B	725.00	23.40	16.30	15.25	12.50
TCE2B24S21S	TM8E060A12MP11	14.50	CF/CM30A	700.00	23.20	16.00	15.00	12.50
TCE2B24S21S	TM8E060A12MP11	14.50	XAF/XAUA24B	700.00	23.20	16.50	15.25	12.75
TCE2B24S21S	TM8E060A12MP11	17.50	XAF/XAUB30C	725.00	23.60	17.10	15.75	13.00
TCE2B24S21S	TM8E060A12MP11	17.50	XAFB24B	725.00	23.40	16.80	15.50	12.75
TCE2B24S21S	TM8E060A12MP11	14.50	XAHA24B	675.00	23.00	16.20	15.00	12.50
TCE2B24S21S	TM8E060A12MP11	17.50	XAHB24B	700.00	23.20	16.50	15.25	12.75
TCE2B24S21S	TM8E060A12MP11	17.50	XAHB30C	700.00	23.60	16.90	15.75	13.00
TCE2B24S21S	TM8E080B12MP11	17.50	CF/CM/CU30B	750.00	23.40	16.50	15.25	12.50
TCE2B24S21S	TM8E080B12MP11	21.00	CF/CM30C	775.00	23.60	16.70	15.25	12.50
TCE2B24S21S	TM8E080B12MP11	17.50	XAF/XAUB30C	750.00	24.00	17.60	15.75	13.00
TCE2B24S21S	TM8E080B12MP11	17.50	XAFB24B	725.00	23.40	16.80	15.25	12.75
TCE2B24S21S	TM8E080B12MP11	21.00	XAFC30C	750.00	23.60	17.30	15.75	13.00
TCE2B24S21S	TM8E080B12MP11	17.50	XAHB24B	725.00	23.40	16.80	15.25	12.75
TCE2B24S21S	TM8E080B12MP11	17.50	XAHB30C	725.00	24.00	17.40	15.50	12.75
TCE2B24S21S	TM8E080B12MP11	21.00	XAHC30C	750.00	23.60	17.30	15.75	13.00
TCE2B24S21S	TM8E080C16MP11	21.00	CF/CM30C	925.00	23.80	17.90	15.50	12.75
TCE2B24S21S	TM8E080C16MP11	21.00	XAFC30C	725.00	24.00	17.40	15.75	13.00
TCE2B24S21S	TM8E080C16MP11	21.00	XAHC30C	725.00	24.00	17.40	15.75	13.00
TCE2B24S21S	TM8E100B12MP11	17.50	CF/CM/CU30B	750.00	23.40	16.50	15.25	12.50
TCE2B24S21S	TM8E100B12MP11	21.00	CF/CM30C	775.00	23.60	16.70	15.25	12.50
TCE2B24S21S	TM8E100B12MP11	17.50	XAF/XAUB30C	750.00	24.00	17.60	15.75	13.00
TCE2B24S21S	TM8E100B12MP11	17.50	XAFB24B	750.00	23.40	16.90	15.25	12.75
TCE2B24S21S	TM8E100B12MP11	21.00	XAFC30C	750.00	23.60	17.30	15.75	13.00
TCE2B24S21S	TM8E100B12MP11	17.50	XAHB24B	725.00	23.40	16.80	15.25	12.75
TCE2B24S21S	TM8E100B12MP11	17.50	XAHB30C	725.00	24.00	17.40	15.75	13.00
TCE2B24S21S	TM8E100B12MP11	21.00	XAHC30C	750.00	23.60	17.30	15.75	13.00
TCE2B24S21S	TM8E100C16MP11	21.00	CF/CM30C	725.00	23.40	16.30	15.25	12.50
TCE2B24S21S	TM8E100C16MP11	21.00	XAFC30C	700.00	23.80	17.10	15.75	13.00
TCE2B24S21S	TM8E100C16MP11	21.00	XAHC30C	700.00	23.80	17.10	15.75	13.00
TCE2B24S21S	TM8E120C16MP11	21.00	CF/CM30C	750.00	23.40	16.40	15.50	12.75
TCE2B24S21S	TM8E120C16MP11	21.00	XAFC30C	725.00	24.00	17.40	16.00	13.00
TCE2B24S21S	TM8E120C16MP11	21.00	XAHC30C	700.00	23.80	17.10	15.75	13.00
TCE2B24S21S	TM8V060A12MP12C	17.50	CF/CM/CU30B	700.00	23.20	16.00	15.25	12.50
TCE2B24S21S	TM8V060A12MP12C	14.50	CF/CM30A	700.00	23.00	15.90	15.00	12.50
TCE2B24S21S	TM8V060A12MP12C	14.50	XAF/XAUA24B	650.00	23.00	16.00	15.25	12.75
TCE2B24S21S	TM8V060A12MP12C	17.50	XAF/XAUB30C	700.00	23.60	16.90	15.75	13.00
TCE2B24S21S	TM8V060A12MP12C	17.50	XAFB24B	700.00	23.20	16.50	15.25	12.75

Table 9: Furnace capacity - 2 ton

Outdoor unit model	Furnace model	Furnace width (in.)	Indoor coil model	Rated CFM	Net cool (MBH)	Sens cool (MBH)	SEER2	EER2
TCE2B24S21S	TM8V060A12MP12C	14.50	XAHA24B	650.00	23.00	16.00	15.25	12.75
TCE2B24S21S	TM8V060A12MP12C	17.50	XAHB24B	700.00	23.20	16.50	15.25	12.75
TCE2B24S21S	TM8V060A12MP12C	17.50	XAHB30C	700.00	23.60	16.90	15.75	13.00
TCE2B24S21S	TM8V080B12MP12C	17.50	CF/CM/CU30B	675.00	23.00	15.70	14.75	12.25
TCE2B24S21S	TM8V080B12MP12C	21.00	CF/CM30C	675.00	23.00	15.70	15.00	12.50
TCE2B24S21S	TM8V080B12MP12C	17.50	XAF/XAUB30C	625.00	23.40	16.30	15.50	12.75
TCE2B24S21S	TM8V080B12MP12C	17.50	XAFB24B	625.00	22.80	15.70	15.00	12.50
TCE2B24S21S	TM8V080B12MP12C	21.00	XAFC30C	625.00	23.40	16.30	15.50	12.75
TCE2B24S21S	TM8V080B12MP12C	17.50	XAHB24B	625.00	22.80	15.70	15.00	12.50
TCE2B24S21S	TM8V080B12MP12C	17.50	XAHB30C	625.00	23.40	16.30	15.25	12.75
TCE2B24S21S	TM8V080B12MP12C	21.00	XAHC30C	625.00	23.40	16.30	15.50	12.75
TCE2B24S21S	TM8V080C16MP12C	21.00	CF/CM30C	850.00	23.80	17.40	15.25	12.50
TCE2B24S21S	TM8V080C16MP12C	21.00	XAFC30C	825.00	23.80	18.00	15.75	13.00
TCE2B24S21S	TM8V080C16MP12C	21.00	XAHC30C	825.00	23.80	18.00	15.50	12.75
TCE2B24S21S	TM8V100C16MP12C	21.00	CF/CM30C	850.00	23.80	17.40	15.25	12.50
TCE2B24S21S	TM8V100C16MP12C	21.00	XAFC30C	825.00	23.80	18.00	15.75	13.00
TCE2B24S21S	TM8V100C16MP12C	21.00	XAHC30C	825.00	23.80	18.00	15.50	12.75
TCE2B24S21S	TM8Y060A12MP11	17.50	CF/CM/CU30B	650.00	22.80	15.40	15.00	12.50
TCE2B24S21S	TM8Y060A12MP11	14.50	CF/CM30A	625.00	22.80	15.20	14.75	12.25
TCE2B24S21S	TM8Y060A12MP11	14.50	XAF/XAUA24B	625.00	22.80	15.70	15.00	12.50
TCE2B24S21S	TM8Y060A12MP11	17.50	XAF/XAUB30C	650.00	23.60	16.50	15.75	13.00
TCE2B24S21S	TM8Y060A12MP11	17.50	XAFB24B	650.00	23.00	16.00	15.25	12.75
TCE2B24S21S	TM8Y060A12MP11	14.50	XAHA24B	625.00	22.80	15.70	15.00	12.50
TCE2B24S21S	TM8Y060A12MP11	17.50	XAHB24B	625.00	22.80	15.70	15.25	12.75
TCE2B24S21S	TM8Y060A12MP11	17.50	XAHB30C	625.00	23.40	16.20	15.50	12.75
TCE2B24S21S	TM8Y080B12MP11	17.50	CF/CM/CU30B	675.00	23.00	15.70	15.25	12.50
TCE2B24S21S	TM8Y080B12MP11	21.00	CF/CM30C	675.00	23.00	15.70	15.25	12.50
TCE2B24S21S	TM8Y080B12MP11	17.50	XAF/XAUB30C	675.00	23.80	16.90	15.75	13.00
TCE2B24S21S	TM8Y080B12MP11	17.50	XAFB24B	650.00	23.00	16.00	15.25	12.75
TCE2B24S21S	TM8Y080B12MP11	21.00	XAFC30C	675.00	23.60	16.70	15.75	13.00
TCE2B24S21S	TM8Y080B12MP11	17.50	XAHB24B	650.00	23.00	16.00	15.25	12.75
TCE2B24S21S	TM8Y080B12MP11	17.50	XAHB30C	650.00	23.60	16.50	15.75	13.00
TCE2B24S21S	TM8Y080B12MP11	21.00	XAHC30C	650.00	23.60	16.50	15.75	13.00
TCE2B24S21S	TM8Y080C16MP11	21.00	XAFC30C	775.00	24.00	17.70	16.00	13.00
TCE2B24S21S	TM8Y080C16MP11	21.00	XAHC30C	775.00	24.00	17.70	16.00	13.00
TCE2B24S21S	TM8Y100C16MP11	21.00	XAFC30C	775.00	24.00	17.70	16.00	13.00
TCE2B24S21S	TM8Y100C16MP11	21.00	XAHC30C	775.00	24.00	17.70	16.00	13.00
TCE2B24S21S	TM8Y100C20MP11	21.00	CF/CM30C	800.00	23.80	17.00	15.50	12.75
TCE2B24S21S	TM8Y100C20MP11	21.00	XAFC30C	775.00	24.00	17.70	16.00	13.00
TCE2B24S21S	TM8Y100C20MP11	21.00	XAHC30C	750.00	24.00	17.60	16.00	13.00
TCE2B24S21S	TM8Y120C20MP11	21.00	CF/CM30C	800.00	23.80	17.00	15.50	12.75
TCE2B24S21S	TM8Y120C20MP11	21.00	XAFC30C	775.00	24.00	17.70	16.00	13.00
TCE2B24S21S	TM8Y120C20MP11	21.00	XAHC30C	750.00	24.00	17.60	16.00	13.00
TCE2B24S21S	TM9E026A08MP12	17.50	CF/CM/CU30B	775.00	23.20	16.70	14.30	11.75
TCE2B24S21S	TM9E026A08MP12	14.50	CF/CM30A	725.00	23.00	16.20	14.30	11.75
TCE2B24S21S	TM9E026A08MP12	14.50	XAF/XAUA24B	750.00	23.20	17.00	14.30	12.00
TCE2B24S21S	TM9E026A08MP12	17.50	XAF/XAUB30C	775.00	23.60	17.70	15.00	12.50
TCE2B24S21S	TM9E026A08MP12	17.50	XAFB24B	750.00	23.20	17.00	14.30	12.00
TCE2B24S21S	TM9E026A08MP12	14.50	XAHA24B	725.00	23.00	16.70	14.30	12.00
TCE2B24S21S	TM9E026A08MP12	17.50	XAHB24B	750.00	23.20	17.00	14.30	12.00
TCE2B24S21S	TM9E026A08MP12	17.50	XAHB30C	750.00	23.60	17.50	14.50	12.25
TCE2B24S21S	TM9E040A10MP12	17.50	CF/CM/CU30B	700.00	23.00	15.90	14.50	12.25
TCE2B24S21S	TM9E040A10MP12	14.50	CF/CM30A	675.00	22.80	15.70	14.30	11.75
TCE2B24S21S	TM9E040A10MP12	14.50	XAF/XAUA24B	675.00	23.00	16.30	14.75	12.25
TCE2B24S21S	TM9E040A10MP12	17.50	XAF/XAUB30C	700.00	23.60	17.00	15.25	12.75
TCE2B24S21S	TM9E040A10MP12	17.50	XAFB24B	700.00	23.20	16.60	14.75	12.25
TCE2B24S21S	TM9E040A10MP12	14.50	XAHA24B	675.00	23.00	16.30	14.75	12.25
TCE2B24S21S	TM9E040A10MP12	17.50	XAHB24B	700.00	23.20	16.60	14.75	12.25
TCE2B24S21S	TM9E040A10MP12	17.50	XAHB30C	700.00	23.60	17.00	15.25	12.75
TCE2B24S21S	TM9E060A10MP12	17.50	CF/CM/CU30B	700.00	23.00	15.90	15.00	12.50
TCE2B24S21S	TM9E060A10MP12	14.50	CF/CM30A	675.00	23.00	15.80	14.75	12.25
TCE2B24S21S	TM9E060A10MP12	14.50	XAF/XAUA24B	675.00	23.00	16.20	15.00	12.50
TCE2B24S21S	TM9E060A10MP12	17.50	XAF/XAUB30C	700.00	23.60	17.00	15.50	12.75

Table 9: Furnace capacity - 2 ton

Outdoor unit model	Furnace model	Furnace width (in.)	Indoor coil model	Rated CFM	Net cool (MBH)	Sens cool (MBH)	SEER2	EER2
TCE2B24S21S	TM9E060A10MP12	17.50	XAFB24B	700.00	23.20	16.50	15.00	12.50
TCE2B24S21S	TM9E060A10MP12	14.50	XAHA24B	675.00	23.00	16.20	15.00	12.50
TCE2B24S21S	TM9E060A10MP12	17.50	XAHB24B	675.00	23.00	16.20	15.00	12.50
TCE2B24S21S	TM9E060A10MP12	17.50	XAHB30C	675.00	23.60	16.80	15.25	12.75
TCE2B24S21S	TM9E060B12MP12	17.50	CF/CM/CU30B	825.00	23.60	17.20	14.75	12.25
TCE2B24S21S	TM9E060B12MP12	21.00	CF/CM30C	825.00	23.60	17.20	14.75	12.25
TCE2B24S21S	TM9E060B12MP12	17.50	XAF/XAUB30C	825.00	23.80	18.10	15.25	12.75
TCE2B24S21S	TM9E060B12MP12	17.50	XAFB24B	800.00	23.60	17.50	14.75	12.25
TCE2B24S21S	TM9E060B12MP12	21.00	XAFC30C	825.00	23.60	17.90	15.25	12.75
TCE2B24S21S	TM9E060B12MP12	17.50	XAHB24B	800.00	23.60	17.50	14.75	12.25
TCE2B24S21S	TM9E060B12MP12	17.50	XAHB30C	800.00	23.80	17.90	15.25	12.75
TCE2B24S21S	TM9E060B12MP12	21.00	XAHC30C	800.00	23.60	17.80	15.25	12.75
TCE2B24S21S	TM9E080B12MP12	17.50	CF/CM/CU30B	800.00	23.60	17.00	15.00	12.50
TCE2B24S21S	TM9E080B12MP12	21.00	CF/CM30C	800.00	23.60	17.00	15.00	12.50
TCE2B24S21S	TM9E080B12MP12	17.50	XAF/XAUB30C	775.00	23.80	17.70	15.50	12.75
TCE2B24S21S	TM9E080B12MP12	17.50	XAFB24B	600.00	22.60	15.40	15.25	12.75
TCE2B24S21S	TM9E080B12MP12	21.00	XAFC30C	775.00	23.60	17.50	15.50	12.75
TCE2B24S21S	TM9E080B12MP12	17.50	XAHB24B	775.00	23.60	17.30	15.00	12.50
TCE2B24S21S	TM9E080B12MP12	17.50	XAHB30C	775.00	23.80	17.70	15.50	12.75
TCE2B24S21S	TM9E080B12MP12	21.00	XAHC30C	775.00	23.60	17.50	15.50	12.75
TCE2B24S21S	TM9E080C16MP12	21.00	CF/CM30C	725.00	23.40	16.30	15.25	12.50
TCE2B24S21S	TM9E080C16MP12	21.00	XAFC30C	700.00	23.80	17.10	15.75	13.00
TCE2B24S21S	TM9E080C16MP12	21.00	XAHC30C	675.00	23.80	16.90	15.75	13.00
TCE2B24S21S	TM9E100C16MP12	21.00	CF/CM30C	925.00	23.80	17.90	15.25	12.50
TCE2B24S21S	TM9E100C16MP12	21.00	XAFC30C	725.00	24.00	17.40	15.75	13.00
TCE2B24S21S	TM9E100C16MP12	21.00	XAHC30C	725.00	24.00	17.40	15.75	13.00
TCE2B24S21S	TM9V040A10MP12C	17.50	CF/CM/CU30B	650.00	22.80	15.50	14.50	12.25
TCE2B24S21S	TM9V040A10MP12C	14.50	CF/CM30A	625.00	22.80	15.30	14.50	12.00
TCE2B24S21S	TM9V040A10MP12C	14.50	XAF/XAUA24B	625.00	22.60	15.60	14.75	12.25
TCE2B24S21S	TM9V040A10MP12C	17.50	XAF/XAUB30C	625.00	23.40	16.30	15.25	12.75
TCE2B24S21S	TM9V040A10MP12C	17.50	XAFB24B	650.00	22.80	15.90	14.75	12.25
TCE2B24S21S	TM9V040A10MP12C	14.50	XAHA24B	625.00	22.60	15.70	14.50	12.25
TCE2B24S21S	TM9V040A10MP12C	17.50	XAHB24B	625.00	22.80	15.80	14.75	12.25
TCE2B24S21S	TM9V040A10MP12C	17.50	XAHB30C	625.00	23.20	16.20	15.00	12.50
TCE2B24S21S	TM9V060B12MP12C	17.50	CF/CM/CU30B	675.00	23.00	15.70	15.00	12.50
TCE2B24S21S	TM9V060B12MP12C	21.00	CF/CM30C	725.00	23.20	16.20	15.00	12.50
TCE2B24S21S	TM9V060B12MP12C	17.50	XAF/XAUB30C	725.00	23.80	17.30	15.50	12.75
TCE2B24S21S	TM9V060B12MP12C	17.50	XAFB24B	675.00	23.00	16.20	15.00	12.50
TCE2B24S21S	TM9V060B12MP12C	21.00	XAFC30C	725.00	23.60	17.20	15.50	12.75
TCE2B24S21S	TM9V060B12MP12C	17.50	XAHB24B	650.00	23.00	16.00	15.00	12.50
TCE2B24S21S	TM9V060B12MP12C	17.50	XAHB30C	600.00	23.20	15.90	15.25	12.75
TCE2B24S21S	TM9V060B12MP12C	21.00	XAHC30C	675.00	23.60	16.80	15.50	12.75
TCE2B24S21S	TM9V080B12MP12C	17.50	CF/CM/CU30B	700.00	23.20	16.00	15.25	12.50
TCE2B24S21S	TM9V080B12MP12C	21.00	CF/CM30C	700.00	23.20	16.00	15.25	12.50
TCE2B24S21S	TM9V080B12MP12C	17.50	XAF/XAUB30C	700.00	23.80	17.10	15.75	13.00
TCE2B24S21S	TM9V080B12MP12C	17.50	XAFB24B	700.00	23.20	16.50	15.25	12.75
TCE2B24S21S	TM9V080B12MP12C	21.00	XAFC30C	700.00	23.60	16.90	15.75	13.00
TCE2B24S21S	TM9V080B12MP12C	17.50	XAHB24B	675.00	23.00	16.20	15.25	12.75
TCE2B24S21S	TM9V080B12MP12C	17.50	XAHB30C	625.00	23.40	16.20	15.50	12.75
TCE2B24S21S	TM9V080B12MP12C	21.00	XAHC30C	700.00	23.60	16.90	15.75	13.00
TCE2B24S21S	TM9V080C16MP12C	21.00	CF/CM30C	925.00	23.60	17.80	15.00	12.50
TCE2B24S21S	TM9V080C16MP12C	21.00	XAFC30C	925.00	23.60	18.70	15.25	12.75
TCE2B24S21S	TM9V080C16MP12C	21.00	XAHC30C	925.00	23.60	18.70	15.25	12.75
TCE2B24S21S	TM9V100C16MP12C	21.00	CF/CM30C	900.00	23.80	17.70	15.25	12.50
TCE2B24S21S	TM9V100C16MP12C	21.00	XAFC30C	900.00	23.80	18.60	15.50	12.75
TCE2B24S21S	TM9V100C16MP12C	21.00	XAHC30C	900.00	23.80	18.60	15.50	12.75
TCE2B24S21S	TM9Y040A10MP11	17.50	CF/CM/CU30B	600.00	22.60	15.00	14.50	12.25
TCE2B24S21S	TM9Y040A10MP11	14.50	CF/CM30A	675.00	22.80	15.70	14.30	11.75
TCE2B24S21S	TM9Y040A10MP11	14.50	XAF/XAUA24B	675.00	22.80	16.20	14.30	12.00
TCE2B24S21S	TM9Y040A10MP11	17.50	XAF/XAUB30C	600.00	23.20	16.00	15.25	12.75
TCE2B24S21S	TM9Y040A10MP11	17.50	XAFB24B	675.00	22.80	16.20	14.30	12.00
TCE2B24S21S	TM9Y040A10MP11	14.50	XAHA24B	675.00	22.80	16.20	14.30	12.00
TCE2B24S21S	TM9Y040A10MP11	17.50	XAHB24B	675.00	22.80	16.20	14.30	12.00

Table 9: Furnace capacity - 2 ton

Outdoor unit model	Furnace model	Furnace width (in.)	Indoor coil model	Rated CFM	Net cool (MBH)	Sens cool (MBH)	SEER2	EER2
TCE2B24S21S	TM9Y040A10MP11	17.50	XAHB30C	675.00	23.40	16.80	14.50	12.25
TCE2B24S21S	TM9Y060B12MP11	17.50	CF/CM/CU30B	725.00	23.20	16.20	15.00	12.50
TCE2B24S21S	TM9Y060B12MP11	21.00	CF/CM30C	750.00	23.40	16.50	15.00	12.50
TCE2B24S21S	TM9Y060B12MP11	17.50	XAF/XAUB30C	725.00	23.80	17.30	15.50	12.75
TCE2B24S21S	TM9Y060B12MP11	17.50	XAFB24B	725.00	23.40	16.80	15.00	12.50
TCE2B24S21S	TM9Y060B12MP11	21.00	XAFC30C	725.00	23.60	17.20	15.50	12.75
TCE2B24S21S	TM9Y060B12MP11	17.50	XAHB24B	700.00	23.20	16.50	15.00	12.50
TCE2B24S21S	TM9Y060B12MP11	17.50	XAHB30C	700.00	23.60	17.00	15.25	12.75
TCE2B24S21S	TM9Y060B12MP11	21.00	XAHC30C	725.00	23.60	17.20	15.50	12.75
TCE2B24S21S	TM9Y080B12MP11	17.50	CF/CM/CU30B	750.00	23.40	16.50	15.00	12.50
TCE2B24S21S	TM9Y080B12MP11	21.00	CF/CM30C	775.00	23.60	16.80	15.25	12.50
TCE2B24S21S	TM9Y080B12MP11	17.50	XAF/XAUB30C	750.00	23.80	17.50	15.50	12.75
TCE2B24S21S	TM9Y080B12MP11	17.50	XAFB24B	750.00	23.40	17.00	15.25	12.75
TCE2B24S21S	TM9Y080B12MP11	21.00	XAFC30C	750.00	23.60	17.30	15.50	12.75
TCE2B24S21S	TM9Y080B12MP11	17.50	XAHB24B	750.00	23.40	17.00	15.25	12.75
TCE2B24S21S	TM9Y080B12MP11	17.50	XAHB30C	750.00	23.80	17.50	15.50	12.75
TCE2B24S21S	TM9Y080B12MP11	21.00	XAHC30C	750.00	23.60	17.30	15.50	12.75
TCE2B24S21S	TM9Y080C16MP11	21.00	CF/CM30C	800.00	23.60	16.90	15.25	12.50
TCE2B24S21S	TM9Y080C16MP11	21.00	XAFC30C	775.00	23.80	17.70	15.75	13.00
TCE2B24S21S	TM9Y080C16MP11	21.00	XAHC30C	775.00	23.80	17.70	15.75	13.00
TCE2B24S21S	TM9Y100C16MP11	21.00	CF/CM30C	800.00	23.60	16.90	15.25	12.50
TCE2B24S21S	TM9Y100C16MP11	21.00	XAFC30C	775.00	23.80	17.60	15.75	13.00
TCE2B24S21S	TM9Y100C16MP11	21.00	XAHC30C	750.00	23.80	17.50	15.50	12.75
TCE2B24S21S	TM9Y100C20MP11	21.00	XAHC30C	950.00	23.60	18.90	15.25	12.75
TCE2B24S21S	TMLE040A12MP11	17.50	CF/CM/CU30B	725.00	23.40	16.30	15.25	12.50
TCE2B24S21S	TMLE040A12MP11	14.50	CF/CM30A	700.00	23.20	16.00	15.00	12.50
TCE2B24S21S	TMLE040A12MP11	14.50	XAF/XAUA24B	700.00	23.20	16.50	15.25	12.75
TCE2B24S21S	TMLE040A12MP11	17.50	XAF/XAUB30C	725.00	23.60	17.10	15.75	13.00
TCE2B24S21S	TMLE040A12MP11	17.50	XAFB24B	725.00	23.40	16.70	15.50	12.75
TCE2B24S21S	TMLE040A12MP11	14.50	XAHA24B	700.00	23.20	16.50	15.25	12.75
TCE2B24S21S	TMLE040A12MP11	17.50	XAHB24B	725.00	23.40	16.80	15.50	12.75
TCE2B24S21S	TMLE040A12MP11	17.50	XAHB30C	725.00	23.60	17.10	15.75	13.00
TCE2B24S21S	TMLE060A12MP11	17.50	CF/CM/CU30B	725.00	23.40	16.30	15.25	12.50
TCE2B24S21S	TMLE060A12MP11	14.50	CF/CM30A	700.00	23.20	16.00	15.00	12.50
TCE2B24S21S	TMLE060A12MP11	14.50	XAF/XAUA24B	700.00	23.20	16.50	15.25	12.75
TCE2B24S21S	TMLE060A12MP11	17.50	XAF/XAUB30C	725.00	23.60	17.10	15.75	13.00
TCE2B24S21S	TMLE060A12MP11	17.50	XAFB24B	725.00	23.40	16.80	15.50	12.75
TCE2B24S21S	TMLE060A12MP11	14.50	XAHA24B	675.00	23.00	16.20	15.00	12.50
TCE2B24S21S	TMLE060A12MP11	17.50	XAHB24B	700.00	23.20	16.50	15.25	12.75
TCE2B24S21S	TMLE060A12MP11	17.50	XAHB30C	700.00	23.60	16.90	15.75	13.00
TCE2B24S21S	TMLE080B12MP11	17.50	CF/CM/CU30B	750.00	23.40	16.50	15.25	12.50
TCE2B24S21S	TMLE080B12MP11	21.00	CF/CM30C	775.00	23.60	16.70	15.25	12.50
TCE2B24S21S	TMLE080B12MP11	17.50	XAF/XAUB30C	750.00	24.00	17.60	15.75	13.00
TCE2B24S21S	TMLE080B12MP11	17.50	XAFB24B	725.00	23.40	16.80	15.25	12.75
TCE2B24S21S	TMLE080B12MP11	21.00	XAFC30C	750.00	23.60	17.30	15.75	13.00
TCE2B24S21S	TMLE080B12MP11	17.50	XAHB24B	725.00	23.40	16.80	15.25	12.75
TCE2B24S21S	TMLE080B12MP11	17.50	XAHB30C	725.00	24.00	17.40	15.50	12.75
TCE2B24S21S	TMLE080B12MP11	21.00	XAHC30C	750.00	23.60	17.30	15.75	13.00
TCE2B24S21S	TMLE080C16MP11	21.00	CF/CM30C	925.00	23.80	17.90	15.50	12.75
TCE2B24S21S	TMLE080C16MP11	21.00	XAFC30C	725.00	24.00	17.40	15.75	13.00
TCE2B24S21S	TMLE080C16MP11	21.00	XAHC30C	725.00	24.00	17.40	15.75	13.00
TCE2B24S21S	TMLE100B12MP11	17.50	CF/CM/CU30B	750.00	23.40	16.50	15.25	12.50
TCE2B24S21S	TMLE100B12MP11	21.00	CF/CM30C	775.00	23.60	16.70	15.25	12.50
TCE2B24S21S	TMLE100B12MP11	17.50	XAF/XAUB30C	750.00	24.00	17.60	15.75	13.00
TCE2B24S21S	TMLE100B12MP11	17.50	XAFB24B	750.00	23.40	16.90	15.25	12.75
TCE2B24S21S	TMLE100B12MP11	21.00	XAFC30C	750.00	23.60	17.30	15.75	13.00
TCE2B24S21S	TMLE100B12MP11	17.50	XAHB24B	725.00	23.40	16.80	15.25	12.75
TCE2B24S21S	TMLE100B12MP11	17.50	XAHB30C	725.00	24.00	17.40	15.75	13.00
TCE2B24S21S	TMLE100B12MP11	21.00	XAHC30C	750.00	23.60	17.30	15.75	13.00
TCE2B24S21S	TMLE100C16MP11	21.00	CF/CM30C	725.00	23.40	16.30	15.25	12.50
TCE2B24S21S	TMLE100C16MP11	21.00	XAFC30C	700.00	23.80	17.10	15.75	13.00
TCE2B24S21S	TMLE100C16MP11	21.00	XAHC30C	700.00	23.80	17.10	15.75	13.00
TCE2B24S21S	TMLE120C16MP11	21.00	CF/CM30C	750.00	23.40	16.40	15.50	12.75

Table 9: Furnace capacity - 2 ton

Outdoor unit model	Furnace model	Furnace width (in.)	Indoor coil model	Rated CFM	Net cool (MBH)	Sens cool (MBH)	SEER2	EER2
TCE2B24S21S	TMLE120C16MP11	21.00	XAFC30C	725.00	24.00	17.40	16.00	13.00
TCE2B24S21S	TMLE120C16MP11	21.00	XAHC30C	700.00	23.80	17.10	15.75	13.00
TCE2B24S21S	TMLV060A12MP12C	17.50	CF/CM/CU30B	700.00	23.20	16.00	15.25	12.50
TCE2B24S21S	TMLV060A12MP12C	14.50	CF/CM30A	700.00	23.00	15.90	15.00	12.50
TCE2B24S21S	TMLV060A12MP12C	14.50	XAF/XAUA24B	650.00	23.00	16.00	15.25	12.75
TCE2B24S21S	TMLV060A12MP12C	17.50	XAF/XAUB30C	700.00	23.60	16.90	15.75	13.00
TCE2B24S21S	TMLV060A12MP12C	17.50	XAFB24B	700.00	23.20	16.50	15.25	12.75
TCE2B24S21S	TMLV060A12MP12C	14.50	XAHA24B	650.00	23.00	16.00	15.25	12.75
TCE2B24S21S	TMLV060A12MP12C	17.50	XAHB24B	700.00	23.20	16.50	15.25	12.75
TCE2B24S21S	TMLV060A12MP12C	17.50	XAHB30C	700.00	23.60	16.90	15.75	13.00
TCE2B24S21S	TMLV100C16MP12C	21.00	CF/CM30C	850.00	23.80	17.40	15.25	12.50
TCE2B24S21S	TMLV100C16MP12C	21.00	XAFC30C	825.00	23.80	18.00	15.75	13.00
TCE2B24S21S	TMLV100C16MP12C	21.00	XAHC30C	825.00	23.80	18.00	15.50	12.75
TCE2B24S21S	TP9C060B12MP13C	17.50	CF/CM/CU30B	675.00	23.00	15.70	15.00	12.50
TCE2B24S21S	TP9C060B12MP13C	21.00	CF/CM30C	725.00	23.20	16.20	15.00	12.50
TCE2B24S21S	TP9C060B12MP13C	17.50	XAF/XAUB30C	725.00	23.80	17.30	15.50	12.75
TCE2B24S21S	TP9C060B12MP13C	17.50	XAFB24B	675.00	23.00	16.20	15.00	12.50
TCE2B24S21S	TP9C060B12MP13C	21.00	XAFC30C	725.00	23.60	17.20	15.50	12.75
TCE2B24S21S	TP9C060B12MP13C	17.50	XAHB24B	650.00	23.00	16.00	15.00	12.50
TCE2B24S21S	TP9C060B12MP13C	17.50	XAHB30C	600.00	23.20	15.90	15.25	12.75
TCE2B24S21S	TP9C060B12MP13C	21.00	XAHC30C	675.00	23.60	16.80	15.50	12.75
TCE2B24S21S	TP9C080B12MP13C	17.50	CF/CM/CU30B	700.00	23.20	16.00	15.25	12.50
TCE2B24S21S	TP9C080B12MP13C	21.00	CF/CM30C	700.00	23.20	16.00	15.25	12.50
TCE2B24S21S	TP9C080B12MP13C	17.50	XAF/XAUB30C	700.00	23.80	17.10	15.75	13.00
TCE2B24S21S	TP9C080B12MP13C	17.50	XAFB24B	700.00	23.20	16.50	15.25	12.75
TCE2B24S21S	TP9C080B12MP13C	21.00	XAFC30C	700.00	23.60	16.90	15.75	13.00
TCE2B24S21S	TP9C080B12MP13C	17.50	XAHB24B	675.00	23.00	16.20	15.25	12.75
TCE2B24S21S	TP9C080B12MP13C	17.50	XAHB30C	625.00	23.40	16.20	15.50	12.75
TCE2B24S21S	TP9C080B12MP13C	21.00	XAHC30C	700.00	23.60	16.90	15.75	13.00
TCE2B24S21S	TP9C080C16MP13C	21.00	CF/CM30C	925.00	23.60	17.80	15.00	12.50
TCE2B24S21S	TP9C080C16MP13C	21.00	XAFC30C	925.00	23.60	18.70	15.25	12.75
TCE2B24S21S	TP9C080C16MP13C	21.00	XAHC30C	925.00	23.60	18.70	15.25	12.75
TCE2B24S21S	TP9C100C16MP13C	21.00	CF/CM30C	900.00	23.80	17.70	15.25	12.50
TCE2B24S21S	TP9C100C16MP13C	21.00	XAFC30C	900.00	23.80	18.60	15.50	12.75
TCE2B24S21S	TP9C100C16MP13C	21.00	XAHC30C	900.00	23.80	18.60	15.50	12.75
TCE2B24S21S	TPLC060A12MP13C	17.50	CF/CM/CU30B	700.00	23.20	16.00	15.25	12.50
TCE2B24S21S	TPLC060A12MP13C	14.50	CF/CM30A	700.00	23.00	15.90	15.00	12.50
TCE2B24S21S	TPLC060A12MP13C	14.50	XAF/XAUA24B	650.00	23.00	16.00	15.25	12.75
TCE2B24S21S	TPLC060A12MP13C	17.50	XAF/XAUB30C	700.00	23.60	16.90	15.75	13.00
TCE2B24S21S	TPLC060A12MP13C	17.50	XAFB24B	700.00	23.20	16.50	15.25	12.75
TCE2B24S21S	TPLC060A12MP13C	14.50	XAHA24B	650.00	23.00	16.00	15.25	12.75
TCE2B24S21S	TPLC060A12MP13C	17.50	XAHB24B	700.00	23.20	16.50	15.25	12.75
TCE2B24S21S	TPLC060A12MP13C	17.50	XAHB30C	700.00	23.60	16.90	15.75	13.00
TCE2B24S21S	TPLC080B12MP13C	17.50	CF/CM/CU30B	675.00	23.00	15.70	14.75	12.25
TCE2B24S21S	TPLC080B12MP13C	21.00	CF/CM30C	675.00	23.00	15.70	15.00	12.50
TCE2B24S21S	TPLC080B12MP13C	17.50	XAF/XAUB30C	625.00	23.40	16.30	15.50	12.75
TCE2B24S21S	TPLC080B12MP13C	17.50	XAFB24B	625.00	22.80	15.70	15.00	12.50
TCE2B24S21S	TPLC080B12MP13C	21.00	XAFC30C	625.00	23.40	16.30	15.50	12.75
TCE2B24S21S	TPLC080B12MP13C	17.50	XAHB24B	625.00	22.80	15.70	15.00	12.50
TCE2B24S21S	TPLC080B12MP13C	17.50	XAHB30C	625.00	23.40	16.30	15.25	12.75
TCE2B24S21S	TPLC080B12MP13C	21.00	XAHC30C	625.00	23.40	16.30	15.50	12.75
TCE2B24S21S	TPLC080C16MP13C	21.00	CF/CM30C	850.00	23.80	17.40	15.25	12.50
TCE2B24S21S	TPLC080C16MP13C	21.00	XAFC30C	825.00	23.80	18.00	15.75	13.00
TCE2B24S21S	TPLC080C16MP13C	21.00	XAHC30C	825.00	23.80	18.00	15.50	12.75
TCE2B24S21S	TPLC100C16MP13C	21.00	CF/CM30C	850.00	23.80	17.40	15.25	12.50
TCE2B24S21S	TPLC100C16MP13C	21.00	XAFC30C	825.00	23.80	18.00	15.75	13.00
TCE2B24S21S	TPLC100C16MP13C	21.00	XAHC30C	825.00	23.80	18.00	15.50	12.75
TCE2B24S21S	CP9C060B12MP13C	17.50	CF/CM/CU30B	675.00	23.00	15.70	15.00	12.50
TCE2B24S21S	CP9C060B12MP13C	21.00	CF/CM30C	725.00	23.20	16.20	15.00	12.50
TCE2B24S21S	CP9C060B12MP13C	17.50	XAF/XAUB30C	725.00	23.80	17.30	15.50	12.75
TCE2B24S21S	CP9C060B12MP13C	17.50	XAFB24B	675.00	23.00	16.20	15.00	12.50
TCE2B24S21S	CP9C060B12MP13C	21.00	XAFC30C	725.00	23.60	17.20	15.50	12.75
TCE2B24S21S	CP9C060B12MP13C	17.50	XAHB24B	650.00	23.00	16.00	15.00	12.50

Table 9: Furnace capacity - 2 ton

Outdoor unit model	Furnace model	Furnace width (in.)	Indoor coil model	Rated CFM	Net cool (MBH)	Sens cool (MBH)	SEER2	EER2
TCE2B24S21S	CP9C060B12MP13C	17.50	XAHB30C	600.00	23.20	15.90	15.25	12.75
TCE2B24S21S	CP9C060B12MP13C	21.00	XAHC30C	675.00	23.60	16.80	15.50	12.75
TCE2B24S21S	CP9C080B12MP13C	17.50	CF/CM/CU30B	700.00	23.20	16.00	15.25	12.50
TCE2B24S21S	CP9C080B12MP13C	21.00	CF/CM30C	700.00	23.20	16.00	15.25	12.50
TCE2B24S21S	CP9C080B12MP13C	17.50	XAF/XAUB30C	700.00	23.80	17.10	15.75	13.00
TCE2B24S21S	CP9C080B12MP13C	17.50	XAFB24B	700.00	23.20	16.50	15.25	12.75
TCE2B24S21S	CP9C080B12MP13C	21.00	XAFC30C	700.00	23.60	16.90	15.75	13.00
TCE2B24S21S	CP9C080B12MP13C	17.50	XAHB24B	675.00	23.00	16.20	15.25	12.75
TCE2B24S21S	CP9C080B12MP13C	17.50	XAHB30C	625.00	23.40	16.20	15.50	12.75
TCE2B24S21S	CP9C080B12MP13C	21.00	XAHC30C	700.00	23.60	16.90	15.75	13.00
TCE2B24S21S	CP9C080C16MP13C	21.00	CF/CM30C	925.00	23.60	17.80	15.00	12.50
TCE2B24S21S	CP9C080C16MP13C	21.00	XAFC30C	925.00	23.60	18.70	15.25	12.75
TCE2B24S21S	CP9C080C16MP13C	21.00	XAHC30C	925.00	23.60	18.70	15.25	12.75
TCE2B24S21S	CP9C100C16MP13C	21.00	CF/CM30C	900.00	23.80	17.70	15.25	12.50
TCE2B24S21S	CP9C100C16MP13C	21.00	XAFC30C	900.00	23.80	18.60	15.50	12.75
TCE2B24S21S	CP9C100C16MP13C	21.00	XAHC30C	900.00	23.80	18.60	15.50	12.75
TCE2B24S21S	CPLC060A12MP13C	17.50	CF/CM/CU30B	700.00	23.20	16.00	15.25	12.50
TCE2B24S21S	CPLC060A12MP13C	14.50	CF/CM30A	700.00	23.00	15.90	15.00	12.50
TCE2B24S21S	CPLC060A12MP13C	14.50	XAF/XAUA24B	650.00	23.00	16.00	15.25	12.75
TCE2B24S21S	CPLC060A12MP13C	17.50	XAF/XAUB30C	700.00	23.60	16.90	15.75	13.00
TCE2B24S21S	CPLC060A12MP13C	17.50	XAFB24B	700.00	23.20	16.50	15.25	12.75
TCE2B24S21S	CPLC060A12MP13C	14.50	XAHA24B	650.00	23.00	16.00	15.25	12.75
TCE2B24S21S	CPLC060A12MP13C	17.50	XAHB24B	700.00	23.20	16.50	15.25	12.75
TCE2B24S21S	CPLC060A12MP13C	17.50	XAHB30C	700.00	23.60	16.90	15.75	13.00
TCE2B24S21S	CPLC080B12MP13C	17.50	CF/CM/CU30B	675.00	23.00	15.70	14.75	12.25
TCE2B24S21S	CPLC080B12MP13C	21.00	CF/CM30C	675.00	23.00	15.70	15.00	12.50
TCE2B24S21S	CPLC080B12MP13C	17.50	XAF/XAUB30C	625.00	23.40	16.30	15.50	12.75
TCE2B24S21S	CPLC080B12MP13C	17.50	XAFB24B	625.00	22.80	15.70	15.00	12.50
TCE2B24S21S	CPLC080B12MP13C	21.00	XAFC30C	625.00	23.40	16.30	15.50	12.75
TCE2B24S21S	CPLC080B12MP13C	17.50	XAHB24B	625.00	22.80	15.70	15.00	12.50
TCE2B24S21S	CPLC080B12MP13C	17.50	XAHB30C	625.00	23.40	16.30	15.25	12.75
TCE2B24S21S	CPLC080B12MP13C	21.00	XAHC30C	625.00	23.40	16.30	15.50	12.75
TCE2B24S21S	CPLC080C16MP13C	21.00	CF/CM30C	850.00	23.80	17.40	15.25	12.50
TCE2B24S21S	CPLC080C16MP13C	21.00	XAFC30C	825.00	23.80	18.00	15.75	13.00
TCE2B24S21S	CPLC080C16MP13C	21.00	XAHC30C	825.00	23.80	18.00	15.50	12.75
TCE2B24S21S	CPLC100C16MP13C	21.00	CF/CM30C	850.00	23.80	17.40	15.25	12.50
TCE2B24S21S	CPLC100C16MP13C	21.00	XAFC30C	825.00	23.80	18.00	15.75	13.00
TCE2B24S21S	CPLC100C16MP13C	21.00	XAHC30C	825.00	23.80	18.00	15.50	12.75

Furnace capacity - 2.5 ton

Table 10: Furnace capacity - 2.5 ton

Outdoor unit model	Furnace model	Furnace width (in.)	Indoor coil model	Rated CFM	Net cool (MBH)	Sens cool (MBH)	SEER2	EER2
TCE2B30S21S	TL8E060A12UH11	17.50	CF/CM/CU30B	925.00	29.20	19.60	14.75	12.50
TCE2B30S21S	TL8E060A12UH11	17.50	CF/CM/CU36B	925.00	29.00	19.60	14.75	12.50
TCE2B30S21S	TL8E060A12UH11	17.50	XAF/XAUB30C	925.00	29.20	20.40	15.25	12.50
TCE2B30S21S	TL8E060A12UH11	17.50	XAF/XAUB36D	900.00	29.60	20.20	15.25	12.50
TCE2B30S21S	TL8E060A12UH11	17.50	XAHB30C	900.00	29.00	20.20	15.00	12.50
TCE2B30S21S	TL8E060A12UH11	17.50	XAHB36D	875.00	29.00	19.70	15.00	12.50
TCE2B30S21S	TL8E080C16UH11	21.00	CF/CM30C	950.00	29.60	20.00	15.00	12.50
TCE2B30S21S	TL8E080C16UH11	21.00	CF/CM36C	950.00	29.60	20.00	15.00	12.50
TCE2B30S21S	TL8E080C16UH11	21.00	XAFC30C	925.00	29.80	20.80	15.50	12.75
TCE2B30S21S	TL8E080C16UH11	21.00	XAFC36D	900.00	29.80	20.20	15.50	12.75
TCE2B30S21S	TL8E080C16UH11	21.00	XAHC30C	925.00	29.80	20.80	15.25	12.75
TCE2B30S21S	TL8E080C16UH11	21.00	XAHC36D	900.00	29.80	20.20	15.25	12.75
TCE2B30S21S	TL8E100C20UH11	21.00	CF/CM30C	850.00	29.00	18.90	15.25	12.75
TCE2B30S21S	TL8E100C20UH11	21.00	CF/CM36C	850.00	29.20	19.10	15.25	12.75
TCE2B30S21S	TL8E100C20UH11	21.00	XAFC30C	825.00	29.40	19.80	15.75	13.00
TCE2B30S21S	TL8E100C20UH11	21.00	XAFC36D	800.00	29.40	19.30	15.75	13.00
TCE2B30S21S	TL8E100C20UH11	21.00	XAHC30C	800.00	29.20	19.50	15.75	13.00

Table 10: Furnace capacity - 2.5 ton

Outdoor unit model	Furnace model	Furnace width (in.)	Indoor coil model	Rated CFM	Net cool (MBH)	Sens cool (MBH)	SEER2	EER2
TCE2B30S21S	TL8E100C20UH11	21.00	XAHC36D	800.00	29.40	19.30	15.75	13.00
TCE2B30S21S	TL9E060B12UH11	17.50	CF/CM/CU30B	925.00	29.20	19.70	14.50	12.25
TCE2B30S21S	TL9E060B12UH11	17.50	CF/CM/CU36B	925.00	29.20	19.80	14.50	12.25
TCE2B30S21S	TL9E060B12UH11	21.00	CF/CM30C	925.00	28.80	19.40	14.50	12.25
TCE2B30S21S	TL9E060B12UH11	21.00	CF/CM36C	950.00	29.20	20.00	14.50	12.25
TCE2B30S21S	TL9E060B12UH11	17.50	XAF/XAUB30C	925.00	29.60	20.80	14.75	12.25
TCE2B30S21S	TL9E060B12UH11	17.50	XAF/XAUB36D	900.00	29.60	20.20	14.75	12.25
TCE2B30S21S	TL9E060B12UH11	21.00	XAFC30C	925.00	29.20	20.60	14.75	12.25
TCE2B30S21S	TL9E060B12UH11	21.00	XAFC36D	925.00	29.60	20.40	14.75	12.25
TCE2B30S21S	TL9E060B12UH11	17.50	XAHB30C	900.00	29.40	20.60	14.75	12.25
TCE2B30S21S	TL9E060B12UH11	17.50	XAHB36D	875.00	29.40	20.00	14.50	12.00
TCE2B30S21S	TL9E060B12UH11	21.00	XAHC30C	925.00	29.00	20.40	14.75	12.25
TCE2B30S21S	TL9E060B12UH11	21.00	XAHC36D	900.00	29.40	20.20	14.75	12.25
TCE2B30S21S	TL9E080C16UH11	21.00	CF/CM30C	950.00	29.60	20.00	15.00	12.50
TCE2B30S21S	TL9E080C16UH11	21.00	CF/CM36C	950.00	29.60	20.20	15.00	12.50
TCE2B30S21S	TL9E080C16UH11	21.00	XAFC30C	950.00	29.80	21.00	15.25	12.75
TCE2B30S21S	TL9E080C16UH11	21.00	XAFC36D	925.00	29.80	20.40	15.25	12.75
TCE2B30S21S	TL9E080C16UH11	21.00	XAHC30C	925.00	29.60	20.80	15.25	12.75
TCE2B30S21S	TL9E080C16UH11	21.00	XAHC36D	925.00	29.80	20.40	15.25	12.75
TCE2B30S21S	TL9E100C20UH11	21.00	CF/CM30C	950.00	29.60	19.90	15.25	12.75
TCE2B30S21S	TL9E100C20UH11	21.00	CF/CM36C	950.00	29.80	20.20	15.25	12.75
TCE2B30S21S	TL9E100C20UH11	21.00	XAFC30C	925.00	29.80	20.80	15.50	12.75
TCE2B30S21S	TL9E100C20UH11	21.00	XAFC36D	900.00	29.80	20.20	15.50	12.75
TCE2B30S21S	TL9E100C20UH11	21.00	XAHC30C	900.00	29.60	20.40	15.50	12.75
TCE2B30S21S	TL9E100C20UH11	21.00	XAHC36D	875.00	29.60	20.00	15.50	12.75
TCE2B30S21S	TM8E040A12MP11	17.50	CF/CM/CU30B	900.00	29.00	19.30	14.75	12.50
TCE2B30S21S	TM8E040A12MP11	17.50	CF/CM/CU36B	900.00	29.00	19.40	14.75	12.50
TCE2B30S21S	TM8E040A12MP11	17.50	XAF/XAUB30C	900.00	29.20	20.20	15.25	12.75
TCE2B30S21S	TM8E040A12MP11	17.50	XAF/XAUB36D	875.00	29.00	19.60	15.25	12.75
TCE2B30S21S	TM8E040A12MP11	17.50	XAHB30C	850.00	28.60	19.50	15.00	12.50
TCE2B30S21S	TM8E040A12MP11	17.50	XAHB36D	825.00	28.60	19.10	15.00	12.50
TCE2B30S21S	TM8E060A12MP11	17.50	CF/CM/CU30B	900.00	29.00	19.30	14.75	12.50
TCE2B30S21S	TM8E060A12MP11	17.50	CF/CM/CU36B	900.00	29.00	19.40	14.75	12.50
TCE2B30S21S	TM8E060A12MP11	17.50	XAF/XAUB30C	900.00	29.20	20.20	15.25	12.75
TCE2B30S21S	TM8E060A12MP11	17.50	XAF/XAUB36D	875.00	29.00	19.60	15.25	12.75
TCE2B30S21S	TM8E060A12MP11	17.50	XAHB30C	875.00	28.80	19.80	15.25	12.50
TCE2B30S21S	TM8E060A12MP11	17.50	XAHB36D	850.00	28.80	19.30	15.00	12.50
TCE2B30S21S	TM8E080B12MP11	17.50	CF/CM/CU30B	900.00	29.20	19.50	14.75	12.50
TCE2B30S21S	TM8E080B12MP11	17.50	CF/CM/CU36B	900.00	29.40	19.70	14.75	12.50
TCE2B30S21S	TM8E080B12MP11	21.00	CF/CM30C	925.00	29.20	19.60	15.00	12.50
TCE2B30S21S	TM8E080B12MP11	21.00	CF/CM36C	925.00	29.00	19.60	15.00	12.50
TCE2B30S21S	TM8E080B12MP11	17.50	XAF/XAUB30C	900.00	29.60	20.60	15.25	12.75
TCE2B30S21S	TM8E080B12MP11	17.50	XAF/XAUB36D	875.00	29.60	20.00	15.25	12.75
TCE2B30S21S	TM8E080B12MP11	21.00	XAFC30C	900.00	29.20	20.20	15.25	12.75
TCE2B30S21S	TM8E080B12MP11	21.00	XAFC36D	875.00	29.00	19.60	15.25	12.75
TCE2B30S21S	TM8E080B12MP11	17.50	XAHB30C	875.00	29.40	20.20	15.25	12.50
TCE2B30S21S	TM8E080B12MP11	17.50	XAHB36D	850.00	29.40	19.70	15.00	12.50
TCE2B30S21S	TM8E080B12MP11	21.00	XAHC30C	900.00	29.20	20.20	15.25	12.75
TCE2B30S21S	TM8E080B12MP11	21.00	XAHC36D	875.00	29.00	19.60	15.25	12.75
TCE2B30S21S	TM8E080C16MP11	21.00	CF/CM30C	925.00	29.40	19.70	15.00	12.50
TCE2B30S21S	TM8E080C16MP11	21.00	CF/CM36C	925.00	29.60	19.90	15.25	12.75
TCE2B30S21S	TM8E080C16MP11	21.00	XAFC30C	900.00	29.60	20.40	15.50	12.75
TCE2B30S21S	TM8E080C16MP11	21.00	XAFC36D	875.00	29.60	20.00	15.50	12.75
TCE2B30S21S	TM8E080C16MP11	21.00	XAHC30C	875.00	29.40	20.20	15.50	12.75
TCE2B30S21S	TM8E080C16MP11	21.00	XAHC36D	875.00	29.60	20.00	15.50	12.75
TCE2B30S21S	TM8E080C20MP11	21.00	CF/CM30C	1075.00	29.60	20.80	15.25	12.75
TCE2B30S21S	TM8E080C20MP11	21.00	CF/CM36C	1075.00	29.80	21.00	15.25	12.75
TCE2B30S21S	TM8E080C20MP11	21.00	XAFC30C	1050.00	29.80	21.60	15.50	12.75
TCE2B30S21S	TM8E080C20MP11	21.00	XAFC36D	1025.00	30.00	21.20	15.50	12.75
TCE2B30S21S	TM8E080C20MP11	21.00	XAHC30C	1025.00	29.80	21.40	15.25	12.75
TCE2B30S21S	TM8E080C20MP11	21.00	XAHC36D	1000.00	30.00	21.00	15.50	12.75
TCE2B30S21S	TM8E100B12MP11	17.50	CF/CM/CU30B	950.00	29.40	19.90	14.75	12.50
TCE2B30S21S	TM8E100B12MP11	17.50	CF/CM/CU36B	950.00	29.60	20.20	14.75	12.50

Table 10: Furnace capacity - 2.5 ton

Outdoor unit model	Furnace model	Furnace width (in.)	Indoor coil model	Rated CFM	Net cool (MBH)	Sens cool (MBH)	SEER2	EER2
TCE2B30S21S	TM8E100B12MP11	21.00	CF/CM30C	975.00	29.40	20.00	14.75	12.50
TCE2B30S21S	TM8E100B12MP11	21.00	CF/CM36C	975.00	29.40	20.20	15.00	12.50
TCE2B30S21S	TM8E100B12MP11	17.50	XAF/XAUB30C	950.00	29.80	21.00	15.25	12.50
TCE2B30S21S	TM8E100B12MP11	17.50	XAF/XAUB36D	925.00	29.80	20.60	15.25	12.50
TCE2B30S21S	TM8E100B12MP11	21.00	XAFC30C	950.00	29.40	20.80	15.25	12.50
TCE2B30S21S	TM8E100B12MP11	21.00	XAFC36D	950.00	29.60	20.60	15.25	12.75
TCE2B30S21S	TM8E100B12MP11	17.50	XAHB30C	925.00	29.60	20.80	15.00	12.50
TCE2B30S21S	TM8E100B12MP11	17.50	XAHB36D	900.00	29.60	20.20	15.00	12.50
TCE2B30S21S	TM8E100B12MP11	21.00	XAHC30C	950.00	29.40	20.80	15.25	12.50
TCE2B30S21S	TM8E100B12MP11	21.00	XAHC36D	925.00	29.60	20.40	15.00	12.50
TCE2B30S21S	TM8E100C16MP11	21.00	CF/CM30C	925.00	29.40	19.70	15.00	12.50
TCE2B30S21S	TM8E100C16MP11	21.00	CF/CM36C	950.00	29.60	20.00	15.25	12.75
TCE2B30S21S	TM8E100C16MP11	21.00	XAFC30C	925.00	29.80	20.80	15.50	12.75
TCE2B30S21S	TM8E100C16MP11	21.00	XAFC36D	900.00	29.80	20.20	15.50	12.75
TCE2B30S21S	TM8E100C16MP11	21.00	XAHC30C	900.00	29.60	20.60	15.25	12.75
TCE2B30S21S	TM8E100C16MP11	21.00	XAHC36D	875.00	29.60	20.00	15.25	12.75
TCE2B30S21S	TM8E100C20MP11	21.00	CF/CM30C	1075.00	29.60	20.80	15.00	12.50
TCE2B30S21S	TM8E100C20MP11	21.00	CF/CM36C	1075.00	29.80	21.00	15.25	12.75
TCE2B30S21S	TM8E100C20MP11	21.00	XAFC30C	1050.00	29.80	21.60	15.50	12.75
TCE2B30S21S	TM8E100C20MP11	21.00	XAFC36D	1025.00	30.00	21.20	15.50	12.75
TCE2B30S21S	TM8E100C20MP11	21.00	XAHC30C	1025.00	29.80	21.40	15.25	12.75
TCE2B30S21S	TM8E100C20MP11	21.00	XAHC36D	1025.00	30.00	21.20	15.50	12.75
TCE2B30S21S	TM8E120C16MP11	21.00	CF/CM30C	950.00	29.60	20.00	15.00	12.50
TCE2B30S21S	TM8E120C16MP11	21.00	CF/CM36C	950.00	29.80	20.20	15.25	12.75
TCE2B30S21S	TM8E120C16MP11	21.00	XAFC30C	925.00	29.80	20.80	15.50	12.75
TCE2B30S21S	TM8E120C16MP11	21.00	XAFC36D	900.00	29.80	20.20	15.50	12.75
TCE2B30S21S	TM8E120C16MP11	21.00	XAHC30C	925.00	29.80	20.80	15.50	12.75
TCE2B30S21S	TM8E120C16MP11	21.00	XAHC36D	900.00	29.80	20.20	15.50	12.75
TCE2B30S21S	TM8E120C20MP11	21.00	CF/CM30C	1125.00	29.60	21.00	15.00	12.50
TCE2B30S21S	TM8E120C20MP11	21.00	CF/CM36C	1125.00	29.80	21.20	15.25	12.75
TCE2B30S21S	TM8E120C20MP11	21.00	XAFC30C	1100.00	29.80	22.00	15.50	12.75
TCE2B30S21S	TM8E120C20MP11	21.00	XAFC36D	1075.00	30.00	21.60	15.50	12.75
TCE2B30S21S	TM8E120C20MP11	21.00	XAHC30C	1075.00	29.80	21.80	15.25	12.75
TCE2B30S21S	TM8E120C20MP11	21.00	XAHC36D	1050.00	30.00	21.40	15.25	12.75
TCE2B30S21S	TM8V060A12MP12C	17.50	CF/CM/CU30B	875.00	28.40	18.80	14.75	12.50
TCE2B30S21S	TM8V060A12MP12C	17.50	CF/CM/CU36B	875.00	28.60	19.00	15.00	12.50
TCE2B30S21S	TM8V060A12MP12C	17.50	XAF/XAUB30C	875.00	28.80	19.80	15.25	12.75
TCE2B30S21S	TM8V060A12MP12C	17.50	XAF/XAUB36D	875.00	29.00	19.60	15.25	12.75
TCE2B30S21S	TM8V060A12MP12C	17.50	XAHB30C	875.00	28.80	19.80	15.25	12.50
TCE2B30S21S	TM8V060A12MP12C	17.50	XAHB36D	875.00	29.00	19.60	15.00	12.50
TCE2B30S21S	TM8V080B12MP12C	17.50	CF/CM/CU30B	825.00	28.60	18.70	14.50	12.25
TCE2B30S21S	TM8V080B12MP12C	17.50	CF/CM/CU36B	825.00	28.80	18.90	14.50	12.25
TCE2B30S21S	TM8V080B12MP12C	21.00	CF/CM30C	825.00	28.00	18.30	14.50	12.25
TCE2B30S21S	TM8V080B12MP12C	21.00	CF/CM36C	825.00	28.20	18.50	14.50	12.25
TCE2B30S21S	TM8V080B12MP12C	17.50	XAF/XAUB30C	825.00	29.00	19.70	15.00	12.50
TCE2B30S21S	TM8V080B12MP12C	17.50	XAF/XAUB36D	825.00	29.20	19.50	15.00	12.50
TCE2B30S21S	TM8V080B12MP12C	21.00	XAFC30C	825.00	28.40	19.30	15.00	12.50
TCE2B30S21S	TM8V080B12MP12C	21.00	XAFC36D	825.00	28.60	19.10	15.00	12.50
TCE2B30S21S	TM8V080B12MP12C	17.50	XAHB30C	825.00	29.00	19.70	14.75	12.25
TCE2B30S21S	TM8V080B12MP12C	17.50	XAHB36D	825.00	29.20	19.50	14.50	12.00
TCE2B30S21S	TM8V080B12MP12C	21.00	XAHC30C	825.00	28.40	19.30	15.00	12.25
TCE2B30S21S	TM8V080B12MP12C	21.00	XAHC36D	825.00	28.60	19.10	14.75	12.50
TCE2B30S21S	TM8V080C16MP12C	21.00	CF/CM30C	850.00	29.00	18.90	15.00	12.50
TCE2B30S21S	TM8V080C16MP12C	21.00	CF/CM36C	850.00	29.20	19.20	15.00	12.50
TCE2B30S21S	TM8V080C16MP12C	21.00	XAFC30C	825.00	29.20	19.70	15.50	12.75
TCE2B30S21S	TM8V080C16MP12C	21.00	XAFC36D	825.00	29.40	19.50	15.50	12.75
TCE2B30S21S	TM8V080C16MP12C	21.00	XAHC30C	825.00	29.20	19.70	15.25	12.75
TCE2B30S21S	TM8V080C16MP12C	21.00	XAHC36D	825.00	29.40	19.50	15.25	12.75
TCE2B30S21S	TM8V100C16MP12C	21.00	CF/CM30C	850.00	29.00	18.90	15.00	12.50
TCE2B30S21S	TM8V100C16MP12C	21.00	CF/CM36C	850.00	29.20	19.20	15.00	12.50
TCE2B30S21S	TM8V100C16MP12C	21.00	XAFC30C	825.00	29.20	19.70	15.50	12.75
TCE2B30S21S	TM8V100C16MP12C	21.00	XAFC36D	825.00	29.40	19.50	15.50	12.75
TCE2B30S21S	TM8V100C16MP12C	21.00	XAHC30C	825.00	29.20	19.70	15.25	12.75

Table 10: Furnace capacity - 2.5 ton

Outdoor unit model	Furnace model	Furnace width (in.)	Indoor coil model	Rated CFM	Net cool (MBH)	Sens cool (MBH)	SEER2	EER2
TCE2B30S21S	TM8V100C16MP12C	21.00	XAHC36D	825.00	29.40	19.50	15.25	12.75
TCE2B30S21S	TM8V100C20MP12C	21.00	CF/CM30C	1100.00	29.60	21.00	15.00	12.50
TCE2B30S21S	TM8V100C20MP12C	21.00	CF/CM36C	1100.00	29.80	21.20	15.00	12.50
TCE2B30S21S	TM8V100C20MP12C	21.00	XAFC30C	1100.00	29.80	22.00	15.25	12.75
TCE2B30S21S	TM8V100C20MP12C	21.00	XAFC36D	1075.00	30.00	21.60	15.25	12.50
TCE2B30S21S	TM8V100C20MP12C	21.00	XAHC30C	1075.00	29.80	21.80	15.00	12.50
TCE2B30S21S	TM8V100C20MP12C	21.00	XAHC36D	1075.00	30.00	21.60	15.00	12.50
TCE2B30S21S	TM8V120C20MP12C	21.00	CF/CM30C	1100.00	29.60	21.00	15.00	12.50
TCE2B30S21S	TM8V120C20MP12C	21.00	CF/CM36C	1100.00	29.80	21.20	15.00	12.50
TCE2B30S21S	TM8V120C20MP12C	21.00	XAFC30C	1100.00	29.80	22.00	15.25	12.75
TCE2B30S21S	TM8V120C20MP12C	21.00	XAFC36D	1075.00	30.00	21.60	15.25	12.50
TCE2B30S21S	TM8V120C20MP12C	21.00	XAHC30C	1075.00	29.80	21.80	15.00	12.50
TCE2B30S21S	TM8V120C20MP12C	21.00	XAHC36D	1075.00	30.00	21.60	15.00	12.50
TCE2B30S21S	TM8Y060A12MP11	17.50	CF/CM/CU30B	800.00	28.00	18.10	14.75	12.50
TCE2B30S21S	TM8Y060A12MP11	17.50	CF/CM/CU36B	800.00	28.20	18.30	14.75	12.50
TCE2B30S21S	TM8Y060A12MP11	17.50	XAF/XAUB30C	800.00	28.40	19.00	15.25	12.75
TCE2B30S21S	TM8Y060A12MP11	17.50	XAF/XAUB36D	975.00	29.60	20.80	14.75	12.25
TCE2B30S21S	TM8Y060A12MP11	17.50	XAHB30C	975.00	29.20	21.00	14.50	12.25
TCE2B30S21S	TM8Y060A12MP11	17.50	XAHB36D	950.00	29.60	20.60	14.50	12.00
TCE2B30S21S	TM8Y080B12MP11	17.50	CF/CM/CU30B	825.00	28.80	18.70	14.75	12.50
TCE2B30S21S	TM8Y080B12MP11	17.50	CF/CM/CU36B	825.00	28.80	18.80	15.00	12.50
TCE2B30S21S	TM8Y080B12MP11	21.00	CF/CM30C	850.00	28.40	18.60	15.00	12.50
TCE2B30S21S	TM8Y080B12MP11	21.00	CF/CM36C	850.00	28.40	18.70	15.00	12.50
TCE2B30S21S	TM8Y080B12MP11	17.50	XAF/XAUB30C	825.00	29.20	19.70	15.50	12.75
TCE2B30S21S	TM8Y080B12MP11	17.50	XAF/XAUB36D	800.00	29.20	19.20	15.25	12.75
TCE2B30S21S	TM8Y080B12MP11	21.00	XAFC30C	825.00	28.60	19.30	15.50	12.75
TCE2B30S21S	TM8Y080B12MP11	21.00	XAFC36D	825.00	28.80	19.10	15.50	12.75
TCE2B30S21S	TM8Y080B12MP11	17.50	XAHB30C	800.00	29.00	19.40	15.25	12.75
TCE2B30S21S	TM8Y080B12MP11	17.50	XAHB36D	800.00	29.20	19.20	15.25	12.75
TCE2B30S21S	TM8Y080B12MP11	21.00	XAHC30C	825.00	28.60	19.30	15.25	12.75
TCE2B30S21S	TM8Y080B12MP11	21.00	XAHC36D	800.00	28.60	18.80	15.25	12.75
TCE2B30S21S	TM8Y080C16MP11	21.00	XAFC30C	1000.00	29.80	21.20	15.50	12.75
TCE2B30S21S	TM8Y080C16MP11	21.00	XAFC36D	975.00	29.80	20.80	15.50	12.75
TCE2B30S21S	TM8Y080C16MP11	21.00	XAHC30C	975.00	29.80	21.20	15.50	12.75
TCE2B30S21S	TM8Y080C16MP11	21.00	XAHC36D	950.00	29.80	20.60	15.50	12.75
TCE2B30S21S	TM8Y100C16MP11	21.00	XAFC30C	1000.00	29.80	21.20	15.50	12.75
TCE2B30S21S	TM8Y100C16MP11	21.00	XAFC36D	975.00	29.80	20.80	15.50	12.75
TCE2B30S21S	TM8Y100C16MP11	21.00	XAHC30C	975.00	29.80	21.20	15.50	12.75
TCE2B30S21S	TM8Y100C16MP11	21.00	XAHC36D	950.00	29.80	20.60	15.50	12.75
TCE2B30S21S	TM8Y100C20MP11	21.00	CF/CM30C	1050.00	29.60	20.60	15.25	12.75
TCE2B30S21S	TM8Y100C20MP11	21.00	CF/CM36C	1050.00	29.80	20.80	15.25	12.75
TCE2B30S21S	TM8Y100C20MP11	21.00	XAFC30C	1025.00	29.80	21.40	15.50	12.75
TCE2B30S21S	TM8Y100C20MP11	21.00	XAFC36D	1000.00	30.00	21.00	15.50	12.75
TCE2B30S21S	TM8Y100C20MP11	21.00	XAHC30C	1000.00	29.80	21.40	15.50	12.75
TCE2B30S21S	TM8Y100C20MP11	21.00	XAHC36D	975.00	29.80	20.80	15.50	12.75
TCE2B30S21S	TM8Y120C20MP11	21.00	CF/CM30C	1050.00	29.60	20.60	15.25	12.75
TCE2B30S21S	TM8Y120C20MP11	21.00	CF/CM36C	1050.00	29.80	20.80	15.25	12.75
TCE2B30S21S	TM8Y120C20MP11	21.00	XAFC30C	1025.00	29.80	21.40	15.50	12.75
TCE2B30S21S	TM8Y120C20MP11	21.00	XAFC36D	1000.00	30.00	21.00	15.50	12.75
TCE2B30S21S	TM8Y120C20MP11	21.00	XAHC30C	1000.00	29.80	21.40	15.50	12.75
TCE2B30S21S	TM8Y120C20MP11	21.00	XAHC36D	975.00	29.80	20.80	15.50	12.75
TCE2B30S21S	TM9E040A10MP12	17.50	CF/CM/CU30B	925.00	28.60	19.40	14.30	11.75
TCE2B30S21S	TM9E040A10MP12	17.50	CF/CM/CU36B	900.00	28.80	19.50	14.30	11.75
TCE2B30S21S	TM9E040A10MP12	17.50	XAF/XAUB30C	925.00	29.00	20.60	14.30	11.75
TCE2B30S21S	TM9E040A10MP12	17.50	XAF/XAUB36D	875.00	28.40	19.40	14.50	12.00
TCE2B30S21S	TM9E040A10MP12	17.50	XAHB30C	875.00	28.20	19.60	14.30	11.75
TCE2B30S21S	TM9E040A10MP12	17.50	XAHB36D	850.00	28.40	19.20	14.50	12.00
TCE2B30S21S	TM9E060A10MP12	17.50	CF/CM/CU30B	925.00	28.60	19.40	14.50	12.00
TCE2B30S21S	TM9E060A10MP12	17.50	CF/CM/CU36B	925.00	29.00	19.70	14.50	12.00
TCE2B30S21S	TM9E060A10MP12	17.50	XAF/XAUB30C	925.00	29.00	20.40	14.50	12.25
TCE2B30S21S	TM9E060A10MP12	17.50	XAF/XAUB36D	925.00	29.40	20.40	14.50	12.25
TCE2B30S21S	TM9E060A10MP12	17.50	XAHB30C	900.00	28.80	20.20	14.30	11.75
TCE2B30S21S	TM9E060A10MP12	17.50	XAHB36D	900.00	29.20	20.00	14.50	12.00

Table 10: Furnace capacity - 2.5 ton

Outdoor unit model	Furnace model	Furnace width (in.)	Indoor coil model	Rated CFM	Net cool (MBH)	Sens cool (MBH)	SEER2	EER2
TCE2B30S21S	TM9E060B12MP12	17.50	CF/CM/CU30B	825.00	28.80	18.80	14.50	12.25
TCE2B30S21S	TM9E060B12MP12	17.50	CF/CM/CU36B	825.00	28.80	18.90	14.75	12.50
TCE2B30S21S	TM9E060B12MP12	21.00	CF/CM30C	825.00	28.20	18.40	14.50	12.25
TCE2B30S21S	TM9E060B12MP12	21.00	CF/CM36C	825.00	28.20	18.50	14.75	12.50
TCE2B30S21S	TM9E060B12MP12	17.50	XAF/XAUB30C	825.00	29.20	19.80	15.25	12.50
TCE2B30S21S	TM9E060B12MP12	17.50	XAF/XAUB36D	800.00	29.20	19.30	15.00	12.50
TCE2B30S21S	TM9E060B12MP12	21.00	XAFC30C	825.00	28.60	19.40	15.25	12.50
TCE2B30S21S	TM9E060B12MP12	21.00	XAFC36D	800.00	28.60	18.90	15.00	12.50
TCE2B30S21S	TM9E060B12MP12	17.50	XAHB30C	800.00	29.00	19.50	15.00	12.50
TCE2B30S21S	TM9E060B12MP12	17.50	XAHB36D	925.00	29.60	20.60	14.50	12.00
TCE2B30S21S	TM9E060B12MP12	21.00	XAHC30C	800.00	28.40	19.10	15.00	12.50
TCE2B30S21S	TM9E060B12MP12	21.00	XAHC36D	800.00	28.60	18.90	15.00	12.50
TCE2B30S21S	TM9E080B12MP12	17.50	CF/CM/CU30B	800.00	28.60	18.40	14.75	12.50
TCE2B30S21S	TM9E080B12MP12	17.50	CF/CM/CU36B	800.00	28.80	18.70	14.75	12.50
TCE2B30S21S	TM9E080B12MP12	21.00	CF/CM30C	800.00	28.00	18.00	14.75	12.50
TCE2B30S21S	TM9E080B12MP12	21.00	CF/CM36C	800.00	28.20	18.30	14.75	12.50
TCE2B30S21S	TM9E080B12MP12	17.50	XAF/XAUB30C	925.00	29.60	20.80	15.00	12.50
TCE2B30S21S	TM9E080B12MP12	17.50	XAF/XAUB36D	900.00	29.60	20.20	15.00	12.50
TCE2B30S21S	TM9E080B12MP12	21.00	XAFC30C	925.00	29.20	20.40	15.00	12.50
TCE2B30S21S	TM9E080B12MP12	21.00	XAFC36D	925.00	29.60	20.40	15.25	12.50
TCE2B30S21S	TM9E080B12MP12	17.50	XAHB30C	900.00	29.40	20.40	15.00	12.50
TCE2B30S21S	TM9E080B12MP12	17.50	XAHB36D	875.00	29.40	19.90	15.00	12.50
TCE2B30S21S	TM9E080B12MP12	21.00	XAHC30C	925.00	29.20	20.40	15.00	12.50
TCE2B30S21S	TM9E080B12MP12	21.00	XAHC36D	900.00	29.60	20.20	15.00	12.50
TCE2B30S21S	TM9E080C16MP12	21.00	CF/CM30C	950.00	29.60	20.00	15.00	12.50
TCE2B30S21S	TM9E080C16MP12	21.00	CF/CM36C	950.00	29.60	20.00	15.00	12.50
TCE2B30S21S	TM9E080C16MP12	21.00	XAFC30C	925.00	29.80	20.80	15.25	12.75
TCE2B30S21S	TM9E080C16MP12	21.00	XAFC36D	925.00	29.80	20.40	15.50	12.75
TCE2B30S21S	TM9E080C16MP12	21.00	XAHC30C	925.00	29.60	20.60	15.25	12.75
TCE2B30S21S	TM9E080C16MP12	21.00	XAHC36D	900.00	29.80	20.20	15.25	12.75
TCE2B30S21S	TM9E080C20MP12	21.00	CF/CM30C	1050.00	29.60	20.60	15.00	12.50
TCE2B30S21S	TM9E080C20MP12	21.00	CF/CM36C	1050.00	29.80	20.80	15.25	12.75
TCE2B30S21S	TM9E080C20MP12	21.00	XAFC30C	1025.00	29.80	21.40	15.50	12.75
TCE2B30S21S	TM9E080C20MP12	21.00	XAFC36D	1025.00	30.00	21.20	15.50	12.75
TCE2B30S21S	TM9E080C20MP12	21.00	XAHC30C	1025.00	29.80	21.40	15.25	12.75
TCE2B30S21S	TM9E080C20MP12	21.00	XAHC36D	1000.00	30.00	21.00	15.25	12.75
TCE2B30S21S	TM9E100C16MP12	21.00	CF/CM30C	925.00	29.40	19.70	15.00	12.50
TCE2B30S21S	TM9E100C16MP12	21.00	CF/CM36C	925.00	29.60	19.90	15.25	12.75
TCE2B30S21S	TM9E100C16MP12	21.00	XAFC30C	900.00	29.60	20.40	15.50	12.75
TCE2B30S21S	TM9E100C16MP12	21.00	XAFC36D	875.00	29.60	20.00	15.50	12.75
TCE2B30S21S	TM9E100C16MP12	21.00	XAHC30C	875.00	29.40	20.20	15.50	12.75
TCE2B30S21S	TM9E100C16MP12	21.00	XAHC36D	875.00	29.60	20.00	15.50	12.75
TCE2B30S21S	TM9E100C20MP12	21.00	CF/CM30C	1025.00	29.60	20.40	15.00	12.50
TCE2B30S21S	TM9E100C20MP12	21.00	CF/CM36C	1025.00	29.80	20.60	15.25	12.75
TCE2B30S21S	TM9E100C20MP12	21.00	XAFC30C	1000.00	29.80	21.40	15.50	12.75
TCE2B30S21S	TM9E100C20MP12	21.00	XAFC36D	1000.00	30.00	21.00	15.50	12.75
TCE2B30S21S	TM9E100C20MP12	21.00	XAHC30C	1000.00	29.80	21.40	15.25	12.75
TCE2B30S21S	TM9E100C20MP12	21.00	XAHC36D	975.00	29.80	20.80	15.50	12.75
TCE2B30S21S	TM9V040A10MP12C	17.50	CF/CM/CU30B	800.00	27.60	17.90	14.30	11.75
TCE2B30S21S	TM9V040A10MP12C	17.50	CF/CM/CU36B	800.00	27.80	18.20	14.50	12.00
TCE2B30S21S	TM9V040A10MP12C	17.50	XAF/XAUB30C	800.00	28.00	18.90	14.30	11.75
TCE2B30S21S	TM9V040A10MP12C	17.50	XAF/XAUB36D	800.00	28.20	18.70	14.50	12.00
TCE2B30S21S	TM9V040A10MP12C	17.50	XAHB30C	800.00	28.00	18.90	14.30	11.75
TCE2B30S21S	TM9V040A10MP12C	17.50	XAHB36D	800.00	28.20	18.80	14.50	12.00
TCE2B30S21S	TM9V060B12MP12C	17.50	CF/CM/CU30B	800.00	28.60	18.50	14.50	12.25
TCE2B30S21S	TM9V060B12MP12C	17.50	CF/CM/CU36B	800.00	28.60	18.60	14.50	12.25
TCE2B30S21S	TM9V060B12MP12C	21.00	CF/CM30C	800.00	28.00	18.10	14.75	12.50
TCE2B30S21S	TM9V060B12MP12C	21.00	CF/CM36C	800.00	28.00	18.20	14.75	12.50
TCE2B30S21S	TM9V060B12MP12C	17.50	XAF/XAUB30C	800.00	29.00	19.50	15.00	12.50
TCE2B30S21S	TM9V060B12MP12C	17.50	XAF/XAUB36D	800.00	29.20	19.30	15.00	12.50
TCE2B30S21S	TM9V060B12MP12C	21.00	XAFC30C	800.00	28.40	19.10	15.00	12.50
TCE2B30S21S	TM9V060B12MP12C	21.00	XAFC36D	800.00	28.60	18.90	15.00	12.50
TCE2B30S21S	TM9V060B12MP12C	17.50	XAHB30C	800.00	29.00	19.50	15.00	12.50

Table 10: Furnace capacity - 2.5 ton

Outdoor unit model	Furnace model	Furnace width (in.)	Indoor coil model	Rated CFM	Net cool (MBH)	Sens cool (MBH)	SEER2	EER2
TCE2B30S21S	TM9V060B12MP12C	17.50	XAHB36D	800.00	29.00	19.20	15.00	12.50
TCE2B30S21S	TM9V060B12MP12C	21.00	XAHC30C	800.00	28.40	19.10	15.00	12.50
TCE2B30S21S	TM9V060B12MP12C	21.00	XAHC36D	800.00	28.60	18.90	15.00	12.50
TCE2B30S21S	TM9V080B12MP12C	17.50	CF/CM/CU30B	825.00	28.80	18.70	14.75	12.50
TCE2B30S21S	TM9V080B12MP12C	17.50	CF/CM/CU36B	825.00	28.80	18.80	14.75	12.50
TCE2B30S21S	TM9V080B12MP12C	21.00	CF/CM30C	825.00	28.20	18.30	15.00	12.50
TCE2B30S21S	TM9V080B12MP12C	21.00	CF/CM36C	825.00	28.40	18.50	15.00	12.50
TCE2B30S21S	TM9V080B12MP12C	17.50	XAF/XAUB30C	825.00	29.20	19.70	15.25	12.75
TCE2B30S21S	TM9V080B12MP12C	17.50	XAF/XAUB36D	825.00	29.40	19.50	15.25	12.75
TCE2B30S21S	TM9V080B12MP12C	21.00	XAFC30C	825.00	28.60	19.30	15.25	12.75
TCE2B30S21S	TM9V080B12MP12C	21.00	XAFC36D	825.00	28.80	19.10	15.25	12.75
TCE2B30S21S	TM9V080B12MP12C	17.50	XAHB30C	825.00	29.20	19.80	15.25	12.50
TCE2B30S21S	TM9V080B12MP12C	17.50	XAHB36D	825.00	29.40	19.60	15.00	12.50
TCE2B30S21S	TM9V080B12MP12C	21.00	XAHC30C	825.00	28.60	19.30	15.25	12.75
TCE2B30S21S	TM9V080B12MP12C	21.00	XAHC36D	825.00	28.80	19.10	15.25	12.75
TCE2B30S21S	TM9V080C16MP12C	21.00	CF/CM30C	925.00	29.40	19.70	14.75	12.50
TCE2B30S21S	TM9V080C16MP12C	21.00	CF/CM36C	925.00	29.40	19.90	14.75	12.50
TCE2B30S21S	TM9V080C16MP12C	21.00	XAFC30C	925.00	29.60	20.80	15.00	12.50
TCE2B30S21S	TM9V080C16MP12C	21.00	XAFC36D	925.00	29.80	20.60	15.00	12.50
TCE2B30S21S	TM9V080C16MP12C	21.00	XAHC30C	925.00	29.60	20.80	15.00	12.50
TCE2B30S21S	TM9V080C16MP12C	21.00	XAHC36D	925.00	29.80	20.60	15.00	12.50
TCE2B30S21S	TM9V100C16MP12C	21.00	CF/CM30C	900.00	29.20	19.40	15.00	12.50
TCE2B30S21S	TM9V100C16MP12C	21.00	CF/CM36C	900.00	29.40	19.60	15.00	12.50
TCE2B30S21S	TM9V100C16MP12C	21.00	XAFC30C	900.00	29.60	20.60	15.50	12.75
TCE2B30S21S	TM9V100C16MP12C	21.00	XAFC36D	900.00	29.80	20.20	15.50	12.75
TCE2B30S21S	TM9V100C16MP12C	21.00	XAHC30C	900.00	29.60	20.60	15.25	12.75
TCE2B30S21S	TM9V100C16MP12C	21.00	XAHC36D	875.00	29.60	20.00	15.25	12.75
TCE2B30S21S	TM9V100C20MP12C	21.00	CF/CM30C	1125.00	29.60	21.20	14.50	12.25
TCE2B30S21S	TM9V100C20MP12C	21.00	CF/CM36C	1125.00	29.80	21.40	14.75	12.50
TCE2B30S21S	TM9V100C20MP12C	21.00	XAFC30C	1125.00	29.80	22.20	14.75	12.25
TCE2B30S21S	TM9V100C20MP12C	21.00	XAFC36D	1125.00	30.00	22.00	14.75	12.25
TCE2B30S21S	TM9V100C20MP12C	21.00	XAHC30C	1125.00	29.80	22.20	14.75	12.25
TCE2B30S21S	TM9V100C20MP12C	21.00	XAHC36D	1125.00	29.80	21.80	14.75	12.25
TCE2B30S21S	TM9Y040A10MP11	17.50	CF/CM/CU30B	825.00	27.60	18.20	14.30	11.75
TCE2B30S21S	TM9Y040A10MP11	17.50	CF/CM/CU36B	825.00	27.80	18.40	14.30	11.75
TCE2B30S21S	TM9Y040A10MP11	17.50	XAF/XAUB30C	825.00	28.00	19.20	14.30	11.75
TCE2B30S21S	TM9Y060B12MP11	17.50	CF/CM/CU30B	825.00	28.60	18.70	14.50	12.25
TCE2B30S21S	TM9Y060B12MP11	17.50	CF/CM/CU36B	825.00	28.80	18.90	14.50	12.25
TCE2B30S21S	TM9Y060B12MP11	21.00	CF/CM30C	850.00	28.20	18.50	14.50	12.25
TCE2B30S21S	TM9Y060B12MP11	21.00	CF/CM36C	850.00	28.40	18.70	14.75	12.50
TCE2B30S21S	TM9Y060B12MP11	17.50	XAF/XAUB30C	825.00	29.20	19.80	15.00	12.50
TCE2B30S21S	TM9Y060B12MP11	17.50	XAF/XAUB36D	800.00	29.20	19.30	15.00	12.50
TCE2B30S21S	TM9Y060B12MP11	21.00	XAFC30C	825.00	28.60	19.40	15.00	12.50
TCE2B30S21S	TM9Y060B12MP11	21.00	XAFC36D	825.00	28.60	19.00	15.00	12.50
TCE2B30S21S	TM9Y060B12MP11	17.50	XAHB30C	800.00	29.00	19.50	15.00	12.50
TCE2B30S21S	TM9Y060B12MP11	17.50	XAHB36D	800.00	29.20	19.30	15.00	12.50
TCE2B30S21S	TM9Y060B12MP11	21.00	XAHC30C	825.00	28.60	19.40	15.00	12.50
TCE2B30S21S	TM9Y060B12MP11	21.00	XAHC36D	800.00	28.60	18.90	15.00	12.50
TCE2B30S21S	TM9Y080B12MP11	17.50	CF/CM/CU30B	875.00	29.00	19.20	14.75	12.50
TCE2B30S21S	TM9Y080B12MP11	17.50	CF/CM/CU36B	875.00	29.20	19.40	14.75	12.50
TCE2B30S21S	TM9Y080B12MP11	21.00	CF/CM30C	875.00	28.40	18.80	14.75	12.50
TCE2B30S21S	TM9Y080B12MP11	21.00	CF/CM36C	875.00	28.60	19.00	14.75	12.50
TCE2B30S21S	TM9Y080B12MP11	17.50	XAF/XAUB30C	875.00	29.40	20.20	15.25	12.50
TCE2B30S21S	TM9Y080B12MP11	17.50	XAF/XAUB36D	850.00	29.40	19.70	15.25	12.50
TCE2B30S21S	TM9Y080B12MP11	21.00	XAFC30C	875.00	28.80	19.80	15.25	12.75
TCE2B30S21S	TM9Y080B12MP11	21.00	XAFC36D	850.00	28.80	19.30	15.25	12.50
TCE2B30S21S	TM9Y080B12MP11	17.50	XAHB30C	850.00	29.20	20.00	15.00	12.50
TCE2B30S21S	TM9Y080B12MP11	17.50	XAHB36D	825.00	29.20	19.50	15.00	12.50
TCE2B30S21S	TM9Y080B12MP11	21.00	XAHC30C	850.00	28.60	19.50	15.00	12.50
TCE2B30S21S	TM9Y080B12MP11	21.00	XAHC36D	850.00	28.80	19.30	15.25	12.50
TCE2B30S21S	TM9Y080C16MP11	21.00	CF/CM30C	800.00	28.60	18.40	15.00	12.50
TCE2B30S21S	TM9Y080C16MP11	21.00	CF/CM36C	800.00	28.80	18.60	15.00	12.50
TCE2B30S21S	TM9Y080C16MP11	21.00	XAFC30C	975.00	29.80	21.20	15.25	12.50

Table 10: Furnace capacity - 2.5 ton

Outdoor unit model	Furnace model	Furnace width (in.)	Indoor coil model	Rated CFM	Net cool (MBH)	Sens cool (MBH)	SEER2	EER2
TCE2B30S21S	TM9Y080C16MP11	21.00	XAFC36D	950.00	29.80	20.60	15.25	12.50
TCE2B30S21S	TM9Y080C16MP11	21.00	XAHC30C	975.00	29.80	21.20	15.00	12.50
TCE2B30S21S	TM9Y080C16MP11	21.00	XAHC36D	950.00	29.80	20.60	15.00	12.50
TCE2B30S21S	TM9Y100C16MP11	21.00	CF/CM30C	800.00	28.60	18.40	15.00	12.50
TCE2B30S21S	TM9Y100C16MP11	21.00	CF/CM36C	800.00	28.80	18.60	15.00	12.50
TCE2B30S21S	TM9Y100C16MP11	21.00	XAFC30C	975.00	29.80	21.20	15.25	12.75
TCE2B30S21S	TM9Y100C16MP11	21.00	XAFC36D	950.00	29.80	20.60	15.25	12.75
TCE2B30S21S	TM9Y100C16MP11	21.00	XAHC30C	950.00	29.80	21.00	15.00	12.50
TCE2B30S21S	TM9Y100C16MP11	21.00	XAHC36D	950.00	29.80	20.60	15.25	12.50
TCE2B30S21S	TM9Y100C20MP11	21.00	CF/CM30C	1000.00	29.60	20.40	14.75	12.50
TCE2B30S21S	TM9Y100C20MP11	21.00	CF/CM36C	1000.00	29.60	20.40	15.00	12.50
TCE2B30S21S	TM9Y100C20MP11	21.00	XAFC30C	975.00	29.80	21.20	15.25	12.50
TCE2B30S21S	TM9Y100C20MP11	21.00	XAFC36D	950.00	29.80	20.60	15.25	12.50
TCE2B30S21S	TM9Y100C20MP11	21.00	XAHC30C	950.00	29.80	21.00	15.00	12.50
TCE2B30S21S	TM9Y100C20MP11	21.00	XAHC36D	925.00	29.80	20.60	15.00	12.50
TCE2B30S21S	TMLE040A12MP11	17.50	CF/CM/CU30B	900.00	29.00	19.30	14.75	12.50
TCE2B30S21S	TMLE040A12MP11	17.50	CF/CM/CU36B	900.00	29.00	19.40	14.75	12.50
TCE2B30S21S	TMLE040A12MP11	17.50	XAF/XAUB30C	900.00	29.20	20.20	15.25	12.75
TCE2B30S21S	TMLE040A12MP11	17.50	XAF/XAUB36D	875.00	29.00	19.60	15.25	12.75
TCE2B30S21S	TMLE040A12MP11	17.50	XAHB30C	850.00	28.60	19.50	15.00	12.50
TCE2B30S21S	TMLE040A12MP11	17.50	XAHB36D	825.00	28.60	19.10	15.00	12.50
TCE2B30S21S	TMLE060A12MP11	17.50	CF/CM/CU30B	900.00	29.00	19.30	14.75	12.50
TCE2B30S21S	TMLE060A12MP11	17.50	CF/CM/CU36B	900.00	29.00	19.40	14.75	12.50
TCE2B30S21S	TMLE060A12MP11	17.50	XAF/XAUB30C	900.00	29.20	20.20	15.25	12.75
TCE2B30S21S	TMLE060A12MP11	17.50	XAF/XAUB36D	875.00	29.00	19.60	15.25	12.75
TCE2B30S21S	TMLE060A12MP11	17.50	XAHB30C	875.00	28.80	19.80	15.25	12.50
TCE2B30S21S	TMLE060A12MP11	17.50	XAHB36D	850.00	28.80	19.30	15.00	12.50
TCE2B30S21S	TMLE080B12MP11	17.50	CF/CM/CU30B	900.00	29.20	19.50	14.75	12.50
TCE2B30S21S	TMLE080B12MP11	17.50	CF/CM/CU36B	900.00	29.40	19.70	14.75	12.50
TCE2B30S21S	TMLE080B12MP11	21.00	CF/CM30C	925.00	29.20	19.60	15.00	12.50
TCE2B30S21S	TMLE080B12MP11	21.00	CF/CM36C	925.00	29.00	19.60	15.00	12.50
TCE2B30S21S	TMLE080B12MP11	17.50	XAF/XAUB30C	900.00	29.60	20.60	15.25	12.75
TCE2B30S21S	TMLE080B12MP11	17.50	XAF/XAUB36D	875.00	29.60	20.00	15.25	12.75
TCE2B30S21S	TMLE080B12MP11	21.00	XAFC30C	900.00	29.20	20.20	15.25	12.75
TCE2B30S21S	TMLE080B12MP11	21.00	XAFC36D	875.00	29.00	19.60	15.25	12.75
TCE2B30S21S	TMLE080B12MP11	17.50	XAHB30C	875.00	29.40	20.20	15.25	12.50
TCE2B30S21S	TMLE080B12MP11	17.50	XAHB36D	850.00	29.40	19.70	15.00	12.50
TCE2B30S21S	TMLE080B12MP11	21.00	XAHC30C	900.00	29.20	20.20	15.25	12.75
TCE2B30S21S	TMLE080B12MP11	21.00	XAHC36D	875.00	29.00	19.60	15.25	12.75
TCE2B30S21S	TMLE080C16MP11	21.00	CF/CM30C	925.00	29.40	19.70	15.00	12.50
TCE2B30S21S	TMLE080C16MP11	21.00	CF/CM36C	925.00	29.60	19.90	15.25	12.75
TCE2B30S21S	TMLE080C16MP11	21.00	XAFC30C	900.00	29.60	20.40	15.50	12.75
TCE2B30S21S	TMLE080C16MP11	21.00	XAFC36D	875.00	29.60	20.00	15.50	12.75
TCE2B30S21S	TMLE080C16MP11	21.00	XAHC30C	875.00	29.40	20.20	15.50	12.75
TCE2B30S21S	TMLE080C16MP11	21.00	XAHC36D	875.00	29.60	20.00	15.50	12.75
TCE2B30S21S	TMLE080C20MP11	21.00	CF/CM30C	1075.00	29.60	20.80	15.25	12.75
TCE2B30S21S	TMLE080C20MP11	21.00	CF/CM36C	1075.00	29.80	21.00	15.25	12.75
TCE2B30S21S	TMLE080C20MP11	21.00	XAFC30C	1050.00	29.80	21.60	15.50	12.75
TCE2B30S21S	TMLE080C20MP11	21.00	XAFC36D	1025.00	30.00	21.20	15.50	12.75
TCE2B30S21S	TMLE080C20MP11	21.00	XAHC30C	1025.00	29.80	21.40	15.25	12.75
TCE2B30S21S	TMLE080C20MP11	21.00	XAHC36D	1000.00	30.00	21.00	15.50	12.75
TCE2B30S21S	TMLE100B12MP11	17.50	CF/CM/CU30B	950.00	29.40	19.90	14.75	12.50
TCE2B30S21S	TMLE100B12MP11	17.50	CF/CM/CU36B	950.00	29.60	20.20	14.75	12.50
TCE2B30S21S	TMLE100B12MP11	21.00	CF/CM30C	975.00	29.40	20.00	14.75	12.50
TCE2B30S21S	TMLE100B12MP11	21.00	CF/CM36C	975.00	29.40	20.20	15.00	12.50
TCE2B30S21S	TMLE100B12MP11	17.50	XAF/XAUB30C	950.00	29.80	21.00	15.25	12.50
TCE2B30S21S	TMLE100B12MP11	17.50	XAF/XAUB36D	925.00	29.80	20.60	15.25	12.50
TCE2B30S21S	TMLE100B12MP11	21.00	XAFC30C	950.00	29.40	20.80	15.25	12.50
TCE2B30S21S	TMLE100B12MP11	21.00	XAFC36D	950.00	29.60	20.60	15.25	12.75
TCE2B30S21S	TMLE100B12MP11	17.50	XAHB30C	925.00	29.60	20.80	15.00	12.50
TCE2B30S21S	TMLE100B12MP11	17.50	XAHB36D	900.00	29.60	20.20	15.00	12.50
TCE2B30S21S	TMLE100B12MP11	21.00	XAHC30C	950.00	29.40	20.80	15.25	12.50
TCE2B30S21S	TMLE100B12MP11	21.00	XAHC36D	925.00	29.60	20.40	15.00	12.50

Table 10: Furnace capacity - 2.5 ton

Outdoor unit model	Furnace model	Furnace width (in.)	Indoor coil model	Rated CFM	Net cool (MBH)	Sens cool (MBH)	SEER2	EER2
TCE2B30S21S	TMLE100C16MP11	21.00	CF/CM30C	925.00	29.40	19.70	15.00	12.50
TCE2B30S21S	TMLE100C16MP11	21.00	CF/CM36C	950.00	29.60	20.00	15.25	12.75
TCE2B30S21S	TMLE100C16MP11	21.00	XAFC30C	925.00	29.80	20.80	15.50	12.75
TCE2B30S21S	TMLE100C16MP11	21.00	XAFC36D	900.00	29.80	20.20	15.50	12.75
TCE2B30S21S	TMLE100C16MP11	21.00	XAHC30C	900.00	29.60	20.60	15.25	12.75
TCE2B30S21S	TMLE100C16MP11	21.00	XAHC36D	875.00	29.60	20.00	15.25	12.75
TCE2B30S21S	TMLE100C20MP11	21.00	CF/CM30C	1075.00	29.60	20.80	15.00	12.50
TCE2B30S21S	TMLE100C20MP11	21.00	CF/CM36C	1075.00	29.80	21.00	15.25	12.75
TCE2B30S21S	TMLE100C20MP11	21.00	XAFC30C	1050.00	29.80	21.60	15.50	12.75
TCE2B30S21S	TMLE100C20MP11	21.00	XAFC36D	1025.00	30.00	21.20	15.50	12.75
TCE2B30S21S	TMLE100C20MP11	21.00	XAHC30C	1025.00	29.80	21.40	15.25	12.75
TCE2B30S21S	TMLE100C20MP11	21.00	XAHC36D	1025.00	30.00	21.20	15.50	12.75
TCE2B30S21S	TMLE120C16MP11	21.00	CF/CM30C	950.00	29.60	20.00	15.00	12.50
TCE2B30S21S	TMLE120C16MP11	21.00	CF/CM36C	950.00	29.80	20.20	15.25	12.75
TCE2B30S21S	TMLE120C16MP11	21.00	XAFC30C	925.00	29.80	20.80	15.50	12.75
TCE2B30S21S	TMLE120C16MP11	21.00	XAFC36D	900.00	29.80	20.20	15.50	12.75
TCE2B30S21S	TMLE120C16MP11	21.00	XAHC30C	925.00	29.80	20.80	15.50	12.75
TCE2B30S21S	TMLE120C16MP11	21.00	XAHC36D	900.00	29.80	20.20	15.50	12.75
TCE2B30S21S	TMLE120C20MP11	21.00	CF/CM30C	1125.00	29.60	21.00	15.00	12.50
TCE2B30S21S	TMLE120C20MP11	21.00	CF/CM36C	1125.00	29.80	21.20	15.25	12.75
TCE2B30S21S	TMLE120C20MP11	21.00	XAFC30C	1100.00	29.80	22.00	15.50	12.75
TCE2B30S21S	TMLE120C20MP11	21.00	XAFC36D	1075.00	30.00	21.60	15.50	12.75
TCE2B30S21S	TMLE120C20MP11	21.00	XAHC30C	1075.00	29.80	21.80	15.25	12.75
TCE2B30S21S	TMLE120C20MP11	21.00	XAHC36D	1050.00	30.00	21.40	15.25	12.75
TCE2B30S21S	TMLV060A12MP12C	17.50	CF/CM/CU30B	875.00	28.40	18.80	14.75	12.50
TCE2B30S21S	TMLV060A12MP12C	17.50	CF/CM/CU36B	875.00	28.60	19.00	15.00	12.50
TCE2B30S21S	TMLV060A12MP12C	17.50	XAF/XAUB30C	875.00	28.80	19.80	15.25	12.75
TCE2B30S21S	TMLV060A12MP12C	17.50	XAF/XAUB36D	875.00	29.00	19.60	15.25	12.75
TCE2B30S21S	TMLV060A12MP12C	17.50	XAHB30C	875.00	28.80	19.80	15.25	12.50
TCE2B30S21S	TMLV060A12MP12C	17.50	XAHB36D	875.00	29.00	19.60	15.00	12.50
TCE2B30S21S	TMLV100C16MP12C	21.00	CF/CM30C	850.00	29.00	18.90	15.00	12.50
TCE2B30S21S	TMLV100C16MP12C	21.00	CF/CM36C	850.00	29.20	19.20	15.00	12.50
TCE2B30S21S	TMLV100C16MP12C	21.00	XAFC30C	825.00	29.20	19.70	15.50	12.75
TCE2B30S21S	TMLV100C16MP12C	21.00	XAFC36D	825.00	29.40	19.50	15.50	12.75
TCE2B30S21S	TMLV100C16MP12C	21.00	XAHC30C	825.00	29.20	19.70	15.25	12.75
TCE2B30S21S	TMLV100C16MP12C	21.00	XAHC36D	825.00	29.40	19.50	15.25	12.75
TCE2B30S21S	TMLV120C20MP12C	21.00	CF/CM30C	1100.00	29.60	21.00	15.00	12.50
TCE2B30S21S	TMLV120C20MP12C	21.00	CF/CM36C	1100.00	29.80	21.20	15.00	12.50
TCE2B30S21S	TMLV120C20MP12C	21.00	XAFC30C	1100.00	29.80	22.00	15.25	12.75
TCE2B30S21S	TMLV120C20MP12C	21.00	XAFC36D	1075.00	30.00	21.60	15.25	12.50
TCE2B30S21S	TMLV120C20MP12C	21.00	XAHC30C	1075.00	29.80	21.80	15.00	12.50
TCE2B30S21S	TMLV120C20MP12C	21.00	XAHC36D	1075.00	30.00	21.60	15.00	12.50
TCE2B30S21S	TP9C060B12MP13C	17.50	CF/CM/CU30B	800.00	28.60	18.50	14.50	12.25
TCE2B30S21S	TP9C060B12MP13C	17.50	CF/CM/CU36B	800.00	28.60	18.60	14.50	12.25
TCE2B30S21S	TP9C060B12MP13C	21.00	CF/CM30C	800.00	28.00	18.10	14.75	12.50
TCE2B30S21S	TP9C060B12MP13C	21.00	CF/CM36C	800.00	28.00	18.20	14.75	12.50
TCE2B30S21S	TP9C060B12MP13C	17.50	XAF/XAUB30C	800.00	29.00	19.50	15.00	12.50
TCE2B30S21S	TP9C060B12MP13C	17.50	XAF/XAUB36D	800.00	29.20	19.30	15.00	12.50
TCE2B30S21S	TP9C060B12MP13C	21.00	XAFC30C	800.00	28.40	19.10	15.00	12.50
TCE2B30S21S	TP9C060B12MP13C	21.00	XAFC36D	800.00	28.60	18.90	15.00	12.50
TCE2B30S21S	TP9C060B12MP13C	17.50	XAHB30C	800.00	29.00	19.50	15.00	12.50
TCE2B30S21S	TP9C060B12MP13C	17.50	XAHB36D	800.00	29.00	19.20	15.00	12.50
TCE2B30S21S	TP9C060B12MP13C	21.00	XAHC30C	800.00	28.40	19.10	15.00	12.50
TCE2B30S21S	TP9C060B12MP13C	21.00	XAHC36D	800.00	28.60	18.90	15.00	12.50
TCE2B30S21S	TP9C080B12MP13C	17.50	CF/CM/CU30B	825.00	28.80	18.70	14.75	12.50
TCE2B30S21S	TP9C080B12MP13C	17.50	CF/CM/CU36B	825.00	28.80	18.80	14.75	12.50
TCE2B30S21S	TP9C080B12MP13C	21.00	CF/CM30C	825.00	28.20	18.30	15.00	12.50
TCE2B30S21S	TP9C080B12MP13C	21.00	CF/CM36C	825.00	28.40	18.50	15.00	12.50
TCE2B30S21S	TP9C080B12MP13C	17.50	XAF/XAUB30C	825.00	29.20	19.70	15.25	12.75
TCE2B30S21S	TP9C080B12MP13C	17.50	XAF/XAUB36D	825.00	29.40	19.50	15.25	12.75
TCE2B30S21S	TP9C080B12MP13C	21.00	XAFC30C	825.00	28.60	19.30	15.25	12.75
TCE2B30S21S	TP9C080B12MP13C	21.00	XAFC36D	825.00	28.80	19.10	15.25	12.75
TCE2B30S21S	TP9C080B12MP13C	17.50	XAHB30C	825.00	29.20	19.80	15.25	12.50

Table 10: Furnace capacity - 2.5 ton

Outdoor unit model	Furnace model	Furnace width (in.)	Indoor coil model	Rated CFM	Net cool (MBH)	Sens cool (MBH)	SEER2	EER2
TCE2B30S21S	TP9C080B12MP13C	17.50	XAHB36D	825.00	29.40	19.60	15.00	12.50
TCE2B30S21S	TP9C080B12MP13C	21.00	XAHC30C	825.00	28.60	19.30	15.25	12.75
TCE2B30S21S	TP9C080B12MP13C	21.00	XAHC36D	825.00	28.80	19.10	15.25	12.75
TCE2B30S21S	TP9C080C16MP13C	21.00	CF/CM30C	925.00	29.40	19.70	14.75	12.50
TCE2B30S21S	TP9C080C16MP13C	21.00	CF/CM36C	925.00	29.40	19.90	14.75	12.50
TCE2B30S21S	TP9C080C16MP13C	21.00	XAFC30C	925.00	29.60	20.80	15.00	12.50
TCE2B30S21S	TP9C080C16MP13C	21.00	XAFC36D	925.00	29.80	20.60	15.00	12.50
TCE2B30S21S	TP9C080C16MP13C	21.00	XAHC30C	925.00	29.60	20.80	15.00	12.50
TCE2B30S21S	TP9C080C16MP13C	21.00	XAHC36D	925.00	29.80	20.60	15.00	12.50
TCE2B30S21S	TP9C100C16MP13C	21.00	CF/CM30C	900.00	29.20	19.40	15.00	12.50
TCE2B30S21S	TP9C100C16MP13C	21.00	CF/CM36C	900.00	29.40	19.60	15.00	12.50
TCE2B30S21S	TP9C100C16MP13C	21.00	XAFC30C	900.00	29.60	20.60	15.50	12.75
TCE2B30S21S	TP9C100C16MP13C	21.00	XAFC36D	900.00	29.80	20.20	15.50	12.75
TCE2B30S21S	TP9C100C16MP13C	21.00	XAHC30C	900.00	29.60	20.60	15.25	12.75
TCE2B30S21S	TP9C100C16MP13C	21.00	XAHC36D	875.00	29.60	20.00	15.25	12.75
TCE2B30S21S	TP9C100C20MP13C	21.00	CF/CM30C	1125.00	29.60	21.20	14.50	12.25
TCE2B30S21S	TP9C100C20MP13C	21.00	CF/CM36C	1125.00	29.80	21.40	14.75	12.50
TCE2B30S21S	TP9C100C20MP13C	21.00	XAFC30C	1125.00	29.80	22.20	14.75	12.25
TCE2B30S21S	TP9C100C20MP13C	21.00	XAFC36D	1125.00	30.00	22.00	14.75	12.25
TCE2B30S21S	TP9C100C20MP13C	21.00	XAHC30C	1125.00	29.80	22.20	14.75	12.25
TCE2B30S21S	TP9C100C20MP13C	21.00	XAHC36D	1125.00	29.80	21.80	14.75	12.25
TCE2B30S21S	TPLC060A12MP13C	17.50	CF/CM/CU30B	875.00	28.40	18.80	14.75	12.50
TCE2B30S21S	TPLC060A12MP13C	17.50	CF/CM/CU36B	875.00	28.60	19.00	15.00	12.50
TCE2B30S21S	TPLC060A12MP13C	17.50	XAF/XAUB30C	875.00	28.80	19.80	15.25	12.75
TCE2B30S21S	TPLC060A12MP13C	17.50	XAF/XAUB36D	875.00	29.00	19.60	15.25	12.75
TCE2B30S21S	TPLC060A12MP13C	17.50	XAHB30C	875.00	28.80	19.80	15.25	12.50
TCE2B30S21S	TPLC060A12MP13C	17.50	XAHB36D	875.00	29.00	19.60	15.00	12.50
TCE2B30S21S	TPLC080B12MP13C	17.50	CF/CM/CU30B	825.00	28.60	18.70	14.50	12.25
TCE2B30S21S	TPLC080B12MP13C	17.50	CF/CM/CU36B	825.00	28.80	18.90	14.50	12.25
TCE2B30S21S	TPLC080B12MP13C	21.00	CF/CM30C	825.00	28.00	18.30	14.50	12.25
TCE2B30S21S	TPLC080B12MP13C	21.00	CF/CM36C	825.00	28.20	18.50	14.50	12.25
TCE2B30S21S	TPLC080B12MP13C	17.50	XAF/XAUB30C	825.00	29.00	19.70	15.00	12.50
TCE2B30S21S	TPLC080B12MP13C	17.50	XAF/XAUB36D	825.00	29.20	19.50	15.00	12.50
TCE2B30S21S	TPLC080B12MP13C	21.00	XAFC30C	825.00	28.40	19.30	15.00	12.50
TCE2B30S21S	TPLC080B12MP13C	21.00	XAFC36D	825.00	28.60	19.10	15.00	12.50
TCE2B30S21S	TPLC080B12MP13C	17.50	XAHB30C	825.00	29.00	19.70	14.75	12.25
TCE2B30S21S	TPLC080B12MP13C	17.50	XAHB36D	825.00	29.20	19.50	14.50	12.00
TCE2B30S21S	TPLC080B12MP13C	21.00	XAHC30C	825.00	28.40	19.30	15.00	12.25
TCE2B30S21S	TPLC080B12MP13C	21.00	XAHC36D	825.00	28.60	19.10	14.75	12.50
TCE2B30S21S	TPLC080C16MP13C	21.00	CF/CM30C	850.00	29.00	18.90	15.00	12.50
TCE2B30S21S	TPLC080C16MP13C	21.00	CF/CM36C	850.00	29.20	19.20	15.00	12.50
TCE2B30S21S	TPLC080C16MP13C	21.00	XAFC30C	825.00	29.20	19.70	15.50	12.75
TCE2B30S21S	TPLC080C16MP13C	21.00	XAFC36D	825.00	29.40	19.50	15.50	12.75
TCE2B30S21S	TPLC080C16MP13C	21.00	XAHC30C	825.00	29.20	19.70	15.25	12.75
TCE2B30S21S	TPLC080C16MP13C	21.00	XAHC36D	825.00	29.40	19.50	15.25	12.75
TCE2B30S21S	TPLC100C16MP13C	21.00	CF/CM30C	850.00	29.00	18.90	15.00	12.50
TCE2B30S21S	TPLC100C16MP13C	21.00	CF/CM36C	850.00	29.20	19.20	15.00	12.50
TCE2B30S21S	TPLC100C16MP13C	21.00	XAFC30C	825.00	29.20	19.70	15.50	12.75
TCE2B30S21S	TPLC100C16MP13C	21.00	XAFC36D	825.00	29.40	19.50	15.50	12.75
TCE2B30S21S	TPLC100C16MP13C	21.00	XAHC30C	825.00	29.20	19.70	15.25	12.75
TCE2B30S21S	TPLC100C16MP13C	21.00	XAHC36D	825.00	29.40	19.50	15.25	12.75
TCE2B30S21S	TPLC100C20MP13C	21.00	CF/CM30C	1100.00	29.60	21.00	15.00	12.50
TCE2B30S21S	TPLC100C20MP13C	21.00	CF/CM36C	1100.00	29.80	21.20	15.00	12.50
TCE2B30S21S	TPLC100C20MP13C	21.00	XAFC30C	1100.00	29.80	22.00	15.25	12.75
TCE2B30S21S	TPLC100C20MP13C	21.00	XAFC36D	1075.00	30.00	21.60	15.25	12.50
TCE2B30S21S	TPLC100C20MP13C	21.00	XAHC30C	1075.00	29.80	21.80	15.00	12.50
TCE2B30S21S	TPLC100C20MP13C	21.00	XAHC36D	1075.00	30.00	21.60	15.00	12.50
TCE2B30S21S	TPLC120C20MP13C	21.00	CF/CM30C	1100.00	29.60	21.00	15.00	12.50
TCE2B30S21S	TPLC120C20MP13C	21.00	CF/CM36C	1100.00	29.80	21.20	15.00	12.50
TCE2B30S21S	TPLC120C20MP13C	21.00	XAFC30C	1100.00	29.80	22.00	15.25	12.75
TCE2B30S21S	TPLC120C20MP13C	21.00	XAFC36D	1075.00	30.00	21.60	15.25	12.50
TCE2B30S21S	TPLC120C20MP13C	21.00	XAHC30C	1075.00	29.80	21.80	15.00	12.50
TCE2B30S21S	TPLC120C20MP13C	21.00	XAHC36D	1075.00	30.00	21.60	15.00	12.50

Table 10: Furnace capacity - 2.5 ton

Outdoor unit model	Furnace model	Furnace width (in.)	Indoor coil model	Rated CFM	Net cool (MBH)	Sens cool (MBH)	SEER2	EER2
TCE2B30S21S	CP9C060B12MP13C	17.50	CF/CM/CU30B	800.00	28.60	18.50	14.50	12.25
TCE2B30S21S	CP9C060B12MP13C	17.50	CF/CM/CU36B	800.00	28.60	18.60	14.50	12.25
TCE2B30S21S	CP9C060B12MP13C	21.00	CF/CM30C	800.00	28.00	18.10	14.75	12.50
TCE2B30S21S	CP9C060B12MP13C	21.00	CF/CM36C	800.00	28.00	18.20	14.75	12.50
TCE2B30S21S	CP9C060B12MP13C	17.50	XAF/XAUB30C	800.00	29.00	19.50	15.00	12.50
TCE2B30S21S	CP9C060B12MP13C	17.50	XAF/XAUB36D	800.00	29.20	19.30	15.00	12.50
TCE2B30S21S	CP9C060B12MP13C	21.00	XAFC30C	800.00	28.40	19.10	15.00	12.50
TCE2B30S21S	CP9C060B12MP13C	21.00	XAFC36D	800.00	28.60	18.90	15.00	12.50
TCE2B30S21S	CP9C060B12MP13C	17.50	XAHB30C	800.00	29.00	19.50	15.00	12.50
TCE2B30S21S	CP9C060B12MP13C	17.50	XAHB36D	800.00	29.00	19.20	15.00	12.50
TCE2B30S21S	CP9C060B12MP13C	21.00	XAHC30C	800.00	28.40	19.10	15.00	12.50
TCE2B30S21S	CP9C060B12MP13C	21.00	XAHC36D	800.00	28.60	18.90	15.00	12.50
TCE2B30S21S	CP9C080B12MP13C	17.50	CF/CM/CU30B	825.00	28.80	18.70	14.75	12.50
TCE2B30S21S	CP9C080B12MP13C	17.50	CF/CM/CU36B	825.00	28.80	18.80	14.75	12.50
TCE2B30S21S	CP9C080B12MP13C	21.00	CF/CM30C	825.00	28.20	18.30	15.00	12.50
TCE2B30S21S	CP9C080B12MP13C	21.00	CF/CM36C	825.00	28.40	18.50	15.00	12.50
TCE2B30S21S	CP9C080B12MP13C	17.50	XAF/XAUB30C	825.00	29.20	19.70	15.25	12.75
TCE2B30S21S	CP9C080B12MP13C	17.50	XAF/XAUB36D	825.00	29.40	19.50	15.25	12.75
TCE2B30S21S	CP9C080B12MP13C	21.00	XAFC30C	825.00	28.60	19.30	15.25	12.75
TCE2B30S21S	CP9C080B12MP13C	21.00	XAFC36D	825.00	28.80	19.10	15.25	12.75
TCE2B30S21S	CP9C080B12MP13C	17.50	XAHB30C	825.00	29.20	19.80	15.25	12.50
TCE2B30S21S	CP9C080B12MP13C	17.50	XAHB36D	825.00	29.40	19.60	15.00	12.50
TCE2B30S21S	CP9C080B12MP13C	21.00	XAHC30C	825.00	28.60	19.30	15.25	12.75
TCE2B30S21S	CP9C080B12MP13C	21.00	XAHC36D	825.00	28.80	19.10	15.25	12.75
TCE2B30S21S	CP9C080C16MP13C	21.00	CF/CM30C	925.00	29.40	19.70	14.75	12.50
TCE2B30S21S	CP9C080C16MP13C	21.00	CF/CM36C	925.00	29.40	19.90	14.75	12.50
TCE2B30S21S	CP9C080C16MP13C	21.00	XAFC30C	925.00	29.60	20.80	15.00	12.50
TCE2B30S21S	CP9C080C16MP13C	21.00	XAFC36D	925.00	29.80	20.60	15.00	12.50
TCE2B30S21S	CP9C080C16MP13C	21.00	XAHC30C	925.00	29.60	20.80	15.00	12.50
TCE2B30S21S	CP9C080C16MP13C	21.00	XAHC36D	925.00	29.80	20.60	15.00	12.50
TCE2B30S21S	CP9C100C16MP13C	21.00	CF/CM30C	900.00	29.20	19.40	15.00	12.50
TCE2B30S21S	CP9C100C16MP13C	21.00	CF/CM36C	900.00	29.40	19.60	15.00	12.50
TCE2B30S21S	CP9C100C16MP13C	21.00	XAFC30C	900.00	29.60	20.60	15.50	12.75
TCE2B30S21S	CP9C100C16MP13C	21.00	XAFC36D	900.00	29.80	20.20	15.50	12.75
TCE2B30S21S	CP9C100C16MP13C	21.00	XAHC30C	900.00	29.60	20.60	15.25	12.75
TCE2B30S21S	CP9C100C16MP13C	21.00	XAHC36D	875.00	29.60	20.00	15.25	12.75
TCE2B30S21S	CP9C100C20MP13C	21.00	CF/CM30C	1125.00	29.60	21.20	14.50	12.25
TCE2B30S21S	CP9C100C20MP13C	21.00	CF/CM36C	1125.00	29.80	21.40	14.75	12.50
TCE2B30S21S	CP9C100C20MP13C	21.00	XAFC30C	1125.00	29.80	22.20	14.75	12.25
TCE2B30S21S	CP9C100C20MP13C	21.00	XAFC36D	1125.00	30.00	22.00	14.75	12.25
TCE2B30S21S	CP9C100C20MP13C	21.00	XAHC30C	1125.00	29.80	22.20	14.75	12.25
TCE2B30S21S	CP9C100C20MP13C	21.00	XAHC36D	1125.00	29.80	21.80	14.75	12.25
TCE2B30S21S	CPLC060A12MP13C	17.50	CF/CM/CU30B	875.00	28.40	18.80	14.75	12.50
TCE2B30S21S	CPLC060A12MP13C	17.50	CF/CM/CU36B	875.00	28.60	19.00	15.00	12.50
TCE2B30S21S	CPLC060A12MP13C	17.50	XAF/XAUB30C	875.00	28.80	19.80	15.25	12.75
TCE2B30S21S	CPLC060A12MP13C	17.50	XAF/XAUB36D	875.00	29.00	19.60	15.25	12.75
TCE2B30S21S	CPLC060A12MP13C	17.50	XAHB30C	875.00	28.80	19.80	15.25	12.50
TCE2B30S21S	CPLC060A12MP13C	17.50	XAHB36D	875.00	29.00	19.60	15.00	12.50
TCE2B30S21S	CPLC080B12MP13C	17.50	CF/CM/CU30B	825.00	28.60	18.70	14.50	12.25
TCE2B30S21S	CPLC080B12MP13C	17.50	CF/CM/CU36B	825.00	28.80	18.90	14.50	12.25
TCE2B30S21S	CPLC080B12MP13C	21.00	CF/CM30C	825.00	28.00	18.30	14.50	12.25
TCE2B30S21S	CPLC080B12MP13C	21.00	CF/CM36C	825.00	28.20	18.50	14.50	12.25
TCE2B30S21S	CPLC080B12MP13C	17.50	XAF/XAUB30C	825.00	29.00	19.70	15.00	12.50
TCE2B30S21S	CPLC080B12MP13C	17.50	XAF/XAUB36D	825.00	29.20	19.50	15.00	12.50
TCE2B30S21S	CPLC080B12MP13C	21.00	XAFC30C	825.00	28.40	19.30	15.00	12.50
TCE2B30S21S	CPLC080B12MP13C	21.00	XAFC36D	825.00	28.60	19.10	15.00	12.50
TCE2B30S21S	CPLC080B12MP13C	17.50	XAHB30C	825.00	29.00	19.70	14.75	12.25
TCE2B30S21S	CPLC080B12MP13C	17.50	XAHB36D	825.00	29.20	19.50	14.50	12.00
TCE2B30S21S	CPLC080B12MP13C	21.00	XAHC30C	825.00	28.40	19.30	15.00	12.25
TCE2B30S21S	CPLC080B12MP13C	21.00	XAHC36D	825.00	28.60	19.10	14.75	12.50
TCE2B30S21S	CPLC080C16MP13C	21.00	CF/CM30C	850.00	29.00	18.90	15.00	12.50
TCE2B30S21S	CPLC080C16MP13C	21.00	CF/CM36C	850.00	29.20	19.20	15.00	12.50
TCE2B30S21S	CPLC080C16MP13C	21.00	XAFC30C	825.00	29.20	19.70	15.50	12.75

Table 10: Furnace capacity - 2.5 ton

Outdoor unit model	Furnace model	Furnace width (in.)	Indoor coil model	Rated CFM	Net cool (MBH)	Sens cool (MBH)	SEER2	EER2
TCE2B30S21S	CPLC080C16MP13C	21.00	XAFC36D	825.00	29.40	19.50	15.50	12.75
TCE2B30S21S	CPLC080C16MP13C	21.00	XAHC30C	825.00	29.20	19.70	15.25	12.75
TCE2B30S21S	CPLC080C16MP13C	21.00	XAHC36D	825.00	29.40	19.50	15.25	12.75
TCE2B30S21S	CPLC100C16MP13C	21.00	CF/CM30C	850.00	29.00	18.90	15.00	12.50
TCE2B30S21S	CPLC100C16MP13C	21.00	CF/CM36C	850.00	29.20	19.20	15.00	12.50
TCE2B30S21S	CPLC100C16MP13C	21.00	XAFC30C	825.00	29.20	19.70	15.50	12.75
TCE2B30S21S	CPLC100C16MP13C	21.00	XAFC36D	825.00	29.40	19.50	15.50	12.75
TCE2B30S21S	CPLC100C16MP13C	21.00	XAHC30C	825.00	29.20	19.70	15.25	12.75
TCE2B30S21S	CPLC100C16MP13C	21.00	XAHC36D	825.00	29.40	19.50	15.25	12.75
TCE2B30S21S	CPLC100C20MP13C	21.00	CF/CM30C	1100.00	29.60	21.00	15.00	12.50
TCE2B30S21S	CPLC100C20MP13C	21.00	CF/CM36C	1100.00	29.80	21.20	15.00	12.50
TCE2B30S21S	CPLC100C20MP13C	21.00	XAFC30C	1100.00	29.80	22.00	15.25	12.75
TCE2B30S21S	CPLC100C20MP13C	21.00	XAFC36D	1075.00	30.00	21.60	15.25	12.50
TCE2B30S21S	CPLC100C20MP13C	21.00	XAHC30C	1075.00	29.80	21.80	15.00	12.50
TCE2B30S21S	CPLC100C20MP13C	21.00	XAHC36D	1075.00	30.00	21.60	15.00	12.50
TCE2B30S21S	CPLC120C20MP13C	21.00	CF/CM30C	1100.00	29.60	21.00	15.00	12.50
TCE2B30S21S	CPLC120C20MP13C	21.00	CF/CM36C	1100.00	29.80	21.20	15.00	12.50
TCE2B30S21S	CPLC120C20MP13C	21.00	XAFC30C	1100.00	29.80	22.00	15.25	12.75
TCE2B30S21S	CPLC120C20MP13C	21.00	XAFC36D	1075.00	30.00	21.60	15.25	12.50
TCE2B30S21S	CPLC120C20MP13C	21.00	XAHC30C	1075.00	29.80	21.80	15.00	12.50
TCE2B30S21S	CPLC120C20MP13C	21.00	XAHC36D	1075.00	30.00	21.60	15.00	12.50

Furnace capacity - 3 ton

Table 11: Furnace capacity - 3 ton

Outdoor unit model	Furnace model	Furnace width (in.)	Indoor coil model	Rated CFM	Net cool (MBH)	Sens cool (MBH)	SEER2	EER2
TCE2B36S21S	TL8E060A12UH11	17.50	CF42B	1100.00	34.80	25.40	14.30	11.75
TCE2B36S21S	TL8E060A12UH11	17.50	XAF/XAUB36D	1100.00	35.00	25.60	14.30	11.75
TCE2B36S21S	TL8E060A12UH11	17.50	XAFB36E	1075.00	35.00	25.60	14.30	12.00
TCE2B36S21S	TL8E060A12UH11	17.50	XAHB36D	1050.00	34.80	25.20	14.30	11.75
TCE2B36S21S	TL8E080C16UH11	21.00	CF/CM42C	1125.00	35.40	25.80	14.50	12.50
TCE2B36S21S	TL8E080C16UH11	21.00	XAF/XAUC42E	1100.00	35.20	25.80	14.75	12.50
TCE2B36S21S	TL8E080C16UH11	21.00	XAFC36D	1075.00	35.20	25.60	14.50	12.50
TCE2B36S21S	TL8E080C16UH11	24.50	XAFD42E	1100.00	35.20	25.80	14.75	12.50
TCE2B36S21S	TL8E080C16UH11	21.00	XAHC36D	1075.00	35.20	25.60	14.50	12.25
TCE2B36S21S	TL8E080C16UH11	21.00	XAHC42E	1075.00	35.20	25.60	14.75	12.50
TCE2B36S21S	TL8E080C16UH11	24.50	XAHD42E	1075.00	35.20	25.60	14.75	12.50
TCE2B36S21S	TL8E100C20UH11	21.00	CF/CM42C	1100.00	35.40	25.40	14.75	12.50
TCE2B36S21S	TL8E100C20UH11	21.00	XAF/XAUC42E	1050.00	35.20	25.20	15.25	12.75
TCE2B36S21S	TL8E100C20UH11	21.00	XAFC36D	1050.00	35.20	25.20	15.00	12.50
TCE2B36S21S	TL8E100C20UH11	24.50	XAFD42E	1050.00	35.20	25.20	15.25	12.75
TCE2B36S21S	TL8E100C20UH11	21.00	XAHC36D	1200.00	35.80	27.00	14.75	12.50
TCE2B36S21S	TL8E100C20UH11	21.00	XAHC42E	1025.00	35.00	24.80	15.00	12.50
TCE2B36S21S	TL8E100C20UH11	24.50	XAHD42E	1050.00	35.20	25.20	15.25	12.75
TCE2B36S21S	TL9E060B12UH11	21.00	CF/CM42C	1125.00	35.00	25.80	14.30	11.75
TCE2B36S21S	TL9E060B12UH11	17.50	CF42B	1100.00	34.80	25.60	14.30	11.75
TCE2B36S21S	TL9E060B12UH11	21.00	XAF/XAUC42E	1100.00	35.00	25.80	14.30	11.75
TCE2B36S21S	TL9E060B12UH11	21.00	XAFC36D	1100.00	35.00	25.80	14.30	11.75
TCE2B36S21S	TL9E080C16UH11	21.00	CF/CM42C	1150.00	35.40	26.00	14.50	12.50
TCE2B36S21S	TL9E080C16UH11	21.00	XAF/XAUC42E	1125.00	35.40	26.00	14.75	12.50
TCE2B36S21S	TL9E080C16UH11	21.00	XAFC36D	1125.00	35.40	26.00	14.50	12.25
TCE2B36S21S	TL9E080C16UH11	24.50	XAFD42E	1125.00	35.40	26.00	14.75	12.50
TCE2B36S21S	TL9E080C16UH11	21.00	XAHC36D	1100.00	35.20	25.80	14.50	12.25
TCE2B36S21S	TL9E080C16UH11	21.00	XAHC42E	1100.00	35.20	25.80	14.50	12.25
TCE2B36S21S	TL9E080C16UH11	24.50	XAHD42E	1125.00	35.20	26.00	14.75	12.50
TCE2B36S21S	TL9E100C20UH11	21.00	CF/CM42C	1050.00	35.20	25.00	14.75	12.50
TCE2B36S21S	TL9E100C20UH11	21.00	XAF/XAUC42E	1000.00	35.00	24.60	15.00	12.50
TCE2B36S21S	TL9E100C20UH11	21.00	XAFC36D	1000.00	35.00	24.80	15.00	12.50
TCE2B36S21S	TL9E100C20UH11	24.50	XAFD42E	1000.00	35.00	24.60	15.00	12.50
TCE2B36S21S	TL9E100C20UH11	21.00	XAHC36D	1200.00	35.40	26.80	14.50	12.25

Table 11: Furnace capacity - 3 ton

Outdoor unit model	Furnace model	Furnace width (in.)	Indoor coil model	Rated CFM	Net cool (MBH)	Sens cool (MBH)	SEER2	EER2
TCE2B36S21S	TL9E100C20UH11	21.00	XAHC42E	1200.00	35.60	26.80	14.50	12.25
TCE2B36S21S	TL9E100C20UH11	24.50	XAHD42E	1000.00	35.00	24.60	15.00	12.50
TCE2B36S21S	TM8E040A12MP11	17.50	CF42B	1075.00	35.00	25.20	14.50	12.25
TCE2B36S21S	TM8E040A12MP11	17.50	XAF/XAUB36D	1075.00	35.00	25.40	14.50	12.25
TCE2B36S21S	TM8E040A12MP11	17.50	XAFB36E	1075.00	35.00	25.40	14.50	12.25
TCE2B36S21S	TM8E040A12MP11	17.50	XAHB36D	1050.00	35.00	25.20	14.50	12.00
TCE2B36S21S	TM8E060A12MP11	17.50	CF42B	1100.00	35.00	25.60	14.30	11.75
TCE2B36S21S	TM8E060A12MP11	17.50	XAF/XAUB36D	1100.00	35.00	25.60	14.30	11.75
TCE2B36S21S	TM8E060A12MP11	17.50	XAFB36E	1100.00	35.00	25.80	14.30	12.00
TCE2B36S21S	TM8E060A12MP11	17.50	XAHB36D	1075.00	35.00	25.60	14.30	11.75
TCE2B36S21S	TM8E080B12MP11	21.00	CF/CM42C	1150.00	35.20	26.00	14.30	12.25
TCE2B36S21S	TM8E080B12MP11	17.50	CF42B	1100.00	35.00	25.60	14.30	11.75
TCE2B36S21S	TM8E080B12MP11	17.50	XAF/XAUB36D	1100.00	35.00	25.60	14.30	11.75
TCE2B36S21S	TM8E080B12MP11	21.00	XAF/XAUC42E	1100.00	35.00	25.80	14.30	12.00
TCE2B36S21S	TM8E080B12MP11	17.50	XAFB36E	1100.00	35.00	25.80	14.30	12.00
TCE2B36S21S	TM8E080B12MP11	21.00	XAFC36D	1100.00	35.00	25.60	14.30	11.75
TCE2B36S21S	TM8E080B12MP11	17.50	XAHB36D	1075.00	35.00	25.60	14.30	11.75
TCE2B36S21S	TM8E080B12MP11	21.00	XAHC36D	1100.00	35.00	25.60	14.30	11.75
TCE2B36S21S	TM8E080B12MP11	21.00	XAHC42E	1100.00	35.00	25.80	14.30	12.00
TCE2B36S21S	TM8E080C16MP11	21.00	CF/CM42C	1125.00	35.40	25.80	14.50	12.50
TCE2B36S21S	TM8E080C16MP11	21.00	XAF/XAUC42E	1100.00	35.20	25.60	14.75	12.50
TCE2B36S21S	TM8E080C16MP11	21.00	XAFC36D	1075.00	35.20	25.40	14.75	12.50
TCE2B36S21S	TM8E080C16MP11	24.50	XAFD42E	1100.00	35.20	25.60	14.75	12.50
TCE2B36S21S	TM8E080C16MP11	21.00	XAHC36D	1075.00	35.20	25.40	14.75	12.50
TCE2B36S21S	TM8E080C16MP11	21.00	XAHC42E	1075.00	35.20	25.60	14.75	12.50
TCE2B36S21S	TM8E080C16MP11	24.50	XAHD42E	1075.00	35.20	25.60	14.75	12.50
TCE2B36S21S	TM8E080C20MP11	21.00	CF/CM42C	1075.00	35.40	25.20	15.00	12.50
TCE2B36S21S	TM8E080C20MP11	21.00	XAF/XAUC42E	1025.00	35.20	25.00	15.00	12.50
TCE2B36S21S	TM8E080C20MP11	21.00	XAFC36D	1025.00	35.20	25.00	14.50	12.75
TCE2B36S21S	TM8E080C20MP11	24.50	XAFD42E	1025.00	35.20	25.00	15.00	12.50
TCE2B36S21S	TM8E080C20MP11	21.00	XAHC36D	1000.00	35.00	24.80	15.00	12.50
TCE2B36S21S	TM8E080C20MP11	21.00	XAHC42E	1000.00	35.00	24.60	15.00	12.50
TCE2B36S21S	TM8E080C20MP11	24.50	XAHD42E	1025.00	35.20	25.00	15.00	12.50
TCE2B36S21S	TM8E100B12MP11	21.00	CF/CM42C	1150.00	35.40	26.00	14.30	12.25
TCE2B36S21S	TM8E100B12MP11	17.50	CF42B	1100.00	35.00	25.40	14.30	12.00
TCE2B36S21S	TM8E100B12MP11	17.50	XAF/XAUB36D	1100.00	35.20	25.80	14.30	12.25
TCE2B36S21S	TM8E100B12MP11	21.00	XAF/XAUC42E	1100.00	35.00	25.60	14.50	12.25
TCE2B36S21S	TM8E100B12MP11	17.50	XAFB36E	1100.00	35.00	25.80	14.30	12.25
TCE2B36S21S	TM8E100B12MP11	21.00	XAFC36D	1100.00	35.20	25.80	14.30	12.25
TCE2B36S21S	TM8E100B12MP11	17.50	XAHB36D	1075.00	35.00	25.60	14.30	11.75
TCE2B36S21S	TM8E100B12MP11	21.00	XAHC36D	1100.00	35.20	25.80	14.30	12.25
TCE2B36S21S	TM8E100B12MP11	21.00	XAHC42E	1100.00	35.00	25.60	14.30	12.25
TCE2B36S21S	TM8E100C16MP11	21.00	CF/CM42C	1150.00	35.60	26.20	14.50	12.50
TCE2B36S21S	TM8E100C16MP11	21.00	XAF/XAUC42E	1125.00	35.40	26.00	14.75	12.50
TCE2B36S21S	TM8E100C16MP11	21.00	XAFC36D	1125.00	35.40	26.00	14.75	12.50
TCE2B36S21S	TM8E100C16MP11	24.50	XAFD42E	1125.00	35.40	26.00	14.75	12.50
TCE2B36S21S	TM8E100C16MP11	21.00	XAHC36D	1100.00	35.40	25.80	14.75	12.50
TCE2B36S21S	TM8E100C16MP11	21.00	XAHC42E	1100.00	35.20	25.80	14.50	12.50
TCE2B36S21S	TM8E100C16MP11	24.50	XAHD42E	1100.00	35.20	25.80	14.75	12.50
TCE2B36S21S	TM8E100C20MP11	21.00	CF/CM42C	1075.00	35.40	25.40	15.00	12.50
TCE2B36S21S	TM8E100C20MP11	21.00	XAF/XAUC42E	1025.00	35.00	24.80	15.00	12.50
TCE2B36S21S	TM8E100C20MP11	21.00	XAFC36D	1250.00	35.80	27.40	14.50	12.25
TCE2B36S21S	TM8E100C20MP11	24.50	XAFD42E	1050.00	35.20	25.20	15.00	12.50
TCE2B36S21S	TM8E100C20MP11	21.00	XAHC36D	1250.00	35.80	27.40	14.50	12.25
TCE2B36S21S	TM8E100C20MP11	21.00	XAHC42E	1025.00	35.00	24.80	15.00	12.50
TCE2B36S21S	TM8E100C20MP11	24.50	XAHD42E	1025.00	35.00	24.80	15.00	12.50
TCE2B36S21S	TM8E120C16MP11	21.00	CF/CM42C	1175.00	35.60	26.40	14.75	12.50
TCE2B36S21S	TM8E120C16MP11	21.00	XAF/XAUC42E	1125.00	35.40	26.00	14.75	12.50
TCE2B36S21S	TM8E120C16MP11	21.00	XAFC36D	1125.00	35.40	26.00	14.75	12.50
TCE2B36S21S	TM8E120C16MP11	24.50	XAFD42E	1125.00	35.40	26.00	14.75	12.50
TCE2B36S21S	TM8E120C16MP11	21.00	XAHC36D	1100.00	35.40	25.80	14.50	12.50
TCE2B36S21S	TM8E120C16MP11	21.00	XAHC42E	1100.00	35.20	25.80	14.75	12.50
TCE2B36S21S	TM8E120C16MP11	24.50	XAHD42E	1125.00	35.40	26.00	14.75	12.50

Table 11: Furnace capacity - 3 ton

Outdoor unit model	Furnace model	Furnace width (in.)	Indoor coil model	Rated CFM	Net cool (MBH)	Sens cool (MBH)	SEER2	EER2
TCE2B36S21S	TM8E120C20MP11	21.00	CF/CM42C	1125.00	35.60	25.80	15.00	12.50
TCE2B36S21S	TM8E120C20MP11	21.00	XAF/XAUC42E	1075.00	35.20	25.40	15.00	12.50
TCE2B36S21S	TM8E120C20MP11	21.00	XAFC36D	1075.00	35.40	25.60	15.00	12.50
TCE2B36S21S	TM8E120C20MP11	24.50	XAFD42E	1075.00	35.20	25.40	15.00	12.50
TCE2B36S21S	TM8E120C20MP11	21.00	XAHC36D	1050.00	35.20	25.20	15.00	12.50
TCE2B36S21S	TM8E120C20MP11	21.00	XAHC42E	1050.00	35.00	25.00	15.00	12.50
TCE2B36S21S	TM8E120C20MP11	24.50	XAHD42E	1075.00	35.20	25.40	15.00	12.50
TCE2B36S21S	TM8E130D20MP11	24.50	XAFD42E	1075.00	35.20	25.40	15.00	12.50
TCE2B36S21S	TM8E130D20MP11	24.50	XAHD42E	1050.00	35.00	25.00	15.00	12.50
TCE2B36S21S	TM8V060A12MP12C	17.50	CF42B	1050.00	34.80	25.00	14.30	12.25
TCE2B36S21S	TM8V060A12MP12C	17.50	XAF/XAUB36D	1050.00	35.00	25.20	14.50	12.25
TCE2B36S21S	TM8V060A12MP12C	17.50	XAFB36E	1050.00	34.80	25.20	14.50	12.25
TCE2B36S21S	TM8V060A12MP12C	17.50	XAHB36D	1050.00	34.80	25.20	14.30	11.75
TCE2B36S21S	TM8V080B12MP12C	21.00	CF/CM42C	1000.00	34.80	24.60	14.30	11.75
TCE2B36S21S	TM8V080B12MP12C	17.50	CF42B	1000.00	34.80	24.60	14.30	11.75
TCE2B36S21S	TM8V080B12MP12C	17.50	XAF/XAUB36D	1000.00	34.80	24.80	14.30	11.75
TCE2B36S21S	TM8V080B12MP12C	21.00	XAF/XAUC42E	1000.00	34.80	24.80	14.30	12.00
TCE2B36S21S	TM8V080B12MP12C	21.00	XAFC36D	1000.00	34.80	24.80	14.30	11.75
TCE2B36S21S	TM8V080B12MP12C	21.00	XAHC36D	1000.00	34.80	25.00	14.30	11.75
TCE2B36S21S	TM8V080B12MP12C	21.00	XAHC42E	1000.00	34.80	24.80	14.30	11.75
TCE2B36S21S	TM8V080C16MP12C	21.00	CF/CM42C	1050.00	35.00	24.80	14.75	12.50
TCE2B36S21S	TM8V080C16MP12C	21.00	XAF/XAUC42E	1050.00	35.00	25.20	14.75	12.50
TCE2B36S21S	TM8V080C16MP12C	21.00	XAFC36D	1050.00	35.20	25.20	14.75	12.50
TCE2B36S21S	TM8V080C16MP12C	24.50	XAFD42E	1050.00	35.00	25.20	15.00	12.50
TCE2B36S21S	TM8V080C16MP12C	21.00	XAHC36D	1050.00	35.20	25.20	14.75	12.50
TCE2B36S21S	TM8V080C16MP12C	21.00	XAHC42E	1050.00	35.00	25.20	14.75	12.50
TCE2B36S21S	TM8V080C16MP12C	24.50	XAHD42E	1050.00	35.00	25.20	14.75	12.50
TCE2B36S21S	TM8V100C16MP12C	21.00	CF/CM42C	1050.00	35.00	24.80	14.75	12.50
TCE2B36S21S	TM8V100C16MP12C	21.00	XAF/XAUC42E	1050.00	35.00	25.20	14.75	12.50
TCE2B36S21S	TM8V100C16MP12C	21.00	XAFC36D	1050.00	35.20	25.20	14.75	12.50
TCE2B36S21S	TM8V100C16MP12C	24.50	XAFD42E	1050.00	35.00	25.20	15.00	12.50
TCE2B36S21S	TM8V100C16MP12C	21.00	XAHC36D	1050.00	35.20	25.20	14.75	12.50
TCE2B36S21S	TM8V100C16MP12C	21.00	XAHC42E	1050.00	35.00	25.20	14.75	12.50
TCE2B36S21S	TM8V100C16MP12C	24.50	XAHD42E	1050.00	35.00	25.20	14.75	12.50
TCE2B36S21S	TM8V100C20MP12C	21.00	CF/CM42C	1100.00	35.40	25.60	14.75	12.50
TCE2B36S21S	TM8V100C20MP12C	21.00	XAF/XAUC42E	1075.00	35.20	25.40	15.00	12.50
TCE2B36S21S	TM8V100C20MP12C	21.00	XAFC36D	1075.00	35.20	25.40	14.75	12.50
TCE2B36S21S	TM8V100C20MP12C	24.50	XAFD42E	1075.00	35.20	25.40	15.00	12.50
TCE2B36S21S	TM8V100C20MP12C	21.00	XAHC36D	1075.00	35.20	25.40	14.75	12.50
TCE2B36S21S	TM8V100C20MP12C	21.00	XAHC42E	1075.00	35.20	25.60	14.75	12.50
TCE2B36S21S	TM8V100C20MP12C	24.50	XAHD42E	1075.00	35.20	25.40	14.75	12.50
TCE2B36S21S	TM8V120C20MP12C	21.00	CF/CM42C	1100.00	35.40	25.60	14.75	12.50
TCE2B36S21S	TM8V120C20MP12C	21.00	XAF/XAUC42E	1075.00	35.20	25.40	15.00	12.50
TCE2B36S21S	TM8V120C20MP12C	21.00	XAFC36D	1075.00	35.20	25.40	14.75	12.50
TCE2B36S21S	TM8V120C20MP12C	24.50	XAFD42E	1075.00	35.20	25.40	15.00	12.50
TCE2B36S21S	TM8V120C20MP12C	21.00	XAHC36D	1075.00	35.20	25.40	14.75	12.50
TCE2B36S21S	TM8V120C20MP12C	21.00	XAHC42E	1075.00	35.20	25.60	14.75	12.50
TCE2B36S21S	TM8V120C20MP12C	24.50	XAHD42E	1075.00	35.20	25.40	14.75	12.50
TCE2B36S21S	TM8Y060A12MP11	17.50	CF42B	1000.00	34.80	24.60	14.30	12.25
TCE2B36S21S	TM8Y080B12MP11	21.00	CF/CM42C	1075.00	35.00	25.20	14.50	12.25
TCE2B36S21S	TM8Y080B12MP11	17.50	CF42B	1050.00	34.80	24.80	14.30	12.25
TCE2B36S21S	TM8Y080B12MP11	17.50	XAF/XAUB36D	1025.00	34.80	24.80	14.30	12.25
TCE2B36S21S	TM8Y080B12MP11	21.00	XAF/XAUC42E	1050.00	35.00	25.20	14.50	12.25
TCE2B36S21S	TM8Y080B12MP11	17.50	XAFB36E	1025.00	35.00	25.00	14.50	12.25
TCE2B36S21S	TM8Y080B12MP11	21.00	XAFC36D	1050.00	35.00	25.20	14.50	12.25
TCE2B36S21S	TM8Y080B12MP11	17.50	XAHB36D	1000.00	34.80	24.80	14.50	12.00
TCE2B36S21S	TM8Y080B12MP11	21.00	XAHC36D	1025.00	34.80	24.80	14.30	12.25
TCE2B36S21S	TM8Y080B12MP11	21.00	XAHC42E	1025.00	35.00	25.00	14.50	12.25
TCE2B36S21S	TM8Y080C16MP11	21.00	XAF/XAUC42E	1200.00	35.60	26.80	14.75	12.50
TCE2B36S21S	TM8Y080C16MP11	21.00	XAFC36D	1200.00	35.40	26.60	14.50	12.25
TCE2B36S21S	TM8Y080C16MP11	24.50	XAFD42E	1225.00	35.80	27.20	14.75	12.50
TCE2B36S21S	TM8Y080C16MP11	21.00	XAHC36D	1175.00	35.40	26.40	14.50	12.25
TCE2B36S21S	TM8Y080C16MP11	21.00	XAHC42E	1175.00	35.40	26.60	14.50	12.25

Table 11: Furnace capacity - 3 ton

Outdoor unit model	Furnace model	Furnace width (in.)	Indoor coil model	Rated CFM	Net cool (MBH)	Sens cool (MBH)	SEER2	EER2
TCE2B36S21S	TM8Y080C16MP11	24.50	XAHD42E	1200.00	35.60	26.80	14.75	12.50
TCE2B36S21S	TM8Y100C16MP11	21.00	XAF/XAUC42E	1200.00	35.60	26.80	14.75	12.50
TCE2B36S21S	TM8Y100C16MP11	21.00	XAFC36D	1200.00	35.40	26.60	14.50	12.25
TCE2B36S21S	TM8Y100C16MP11	24.50	XAFD42E	1225.00	35.80	27.20	14.75	12.50
TCE2B36S21S	TM8Y100C16MP11	21.00	XAHC36D	1175.00	35.40	26.40	14.50	12.25
TCE2B36S21S	TM8Y100C16MP11	21.00	XAHC42E	1175.00	35.40	26.60	14.50	12.25
TCE2B36S21S	TM8Y100C16MP11	24.50	XAHD42E	1200.00	35.60	26.80	14.75	12.50
TCE2B36S21S	TM8Y100C20MP11	21.00	CF/CM42C	1050.00	35.20	25.00	15.00	12.50
TCE2B36S21S	TM8Y100C20MP11	21.00	XAF/XAUC42E	1000.00	35.00	24.60	15.00	12.50
TCE2B36S21S	TM8Y100C20MP11	21.00	XAFC36D	1000.00	35.00	24.60	15.00	12.50
TCE2B36S21S	TM8Y100C20MP11	24.50	XAFD42E	1000.00	35.00	24.60	15.25	12.75
TCE2B36S21S	TM8Y100C20MP11	21.00	XAHC36D	1150.00	35.40	26.20	14.75	12.50
TCE2B36S21S	TM8Y100C20MP11	21.00	XAHC42E	1150.00	35.40	26.20	14.75	12.50
TCE2B36S21S	TM8Y100C20MP11	24.50	XAHD42E	1175.00	35.80	26.80	14.75	12.50
TCE2B36S21S	TM8Y120C20MP11	21.00	CF/CM42C	1050.00	35.20	25.00	15.00	12.50
TCE2B36S21S	TM8Y120C20MP11	21.00	XAF/XAUC42E	1000.00	35.00	24.60	15.00	12.50
TCE2B36S21S	TM8Y120C20MP11	21.00	XAFC36D	1000.00	35.00	24.60	15.00	12.50
TCE2B36S21S	TM8Y120C20MP11	24.50	XAFD42E	1000.00	35.00	24.60	15.25	12.75
TCE2B36S21S	TM8Y120C20MP11	21.00	XAHC36D	1150.00	35.40	26.20	14.75	12.50
TCE2B36S21S	TM8Y120C20MP11	21.00	XAHC42E	1150.00	35.40	26.20	14.75	12.50
TCE2B36S21S	TM8Y120C20MP11	24.50	XAHD42E	1175.00	35.80	26.80	14.75	12.50
TCE2B36S21S	TM9E060A10MP12	17.50	CF42B	1025.00	34.80	24.80	14.30	11.75
TCE2B36S21S	TM9E060A10MP12	17.50	XAFB36E	1025.00	34.80	25.00	14.30	11.75
TCE2B36S21S	TM9E060B12MP12	21.00	CF/CM42C	1125.00	35.00	25.80	14.30	11.75
TCE2B36S21S	TM9E060B12MP12	17.50	CF42B	1125.00	35.00	25.80	14.30	11.75
TCE2B36S21S	TM9E060B12MP12	17.50	XAF/XAUB36D	1125.00	35.00	26.00	14.30	11.75
TCE2B36S21S	TM9E060B12MP12	21.00	XAF/XAUC42E	1125.00	35.00	26.00	14.30	11.75
TCE2B36S21S	TM9E060B12MP12	17.50	XAFB36E	1100.00	35.00	25.80	14.30	11.75
TCE2B36S21S	TM9E060B12MP12	21.00	XAFC36D	1125.00	35.00	26.00	14.30	11.75
TCE2B36S21S	TM9E060B12MP12	17.50	XAHB36D	1075.00	35.00	25.60	14.30	11.75
TCE2B36S21S	TM9E060B12MP12	21.00	XAHC36D	1125.00	35.00	26.00	14.30	11.75
TCE2B36S21S	TM9E060B12MP12	21.00	XAHC42E	1125.00	35.00	26.00	14.30	12.00
TCE2B36S21S	TM9E080B12MP12	21.00	CF/CM42C	1150.00	35.20	26.00	14.30	12.25
TCE2B36S21S	TM9E080B12MP12	17.50	CF42B	1100.00	35.00	25.60	14.30	11.75
TCE2B36S21S	TM9E080B12MP12	17.50	XAF/XAUB36D	1100.00	35.00	25.80	14.30	11.75
TCE2B36S21S	TM9E080B12MP12	21.00	XAF/XAUC42E	1125.00	35.00	26.00	14.30	12.00
TCE2B36S21S	TM9E080B12MP12	17.50	XAFB36E	1100.00	35.00	25.80	14.30	12.00
TCE2B36S21S	TM9E080B12MP12	21.00	XAFC36D	1125.00	35.00	25.80	14.30	11.75
TCE2B36S21S	TM9E080B12MP12	17.50	XAHB36D	1075.00	35.00	25.60	14.30	11.75
TCE2B36S21S	TM9E080B12MP12	21.00	XAHC36D	1100.00	35.00	25.80	14.30	11.75
TCE2B36S21S	TM9E080B12MP12	21.00	XAHC42E	1100.00	35.00	25.80	14.30	12.00
TCE2B36S21S	TM9E080C16MP12	21.00	CF/CM42C	1150.00	35.40	26.00	14.50	12.50
TCE2B36S21S	TM9E080C16MP12	21.00	XAF/XAUC42E	1100.00	35.20	25.80	14.50	12.25
TCE2B36S21S	TM9E080C16MP12	21.00	XAFC36D	1100.00	35.20	25.80	14.50	12.25
TCE2B36S21S	TM9E080C16MP12	24.50	XAFD42E	1125.00	35.40	26.00	14.75	12.50
TCE2B36S21S	TM9E080C16MP12	21.00	XAHC36D	1100.00	35.20	25.80	14.50	12.25
TCE2B36S21S	TM9E080C16MP12	21.00	XAHC42E	1100.00	35.20	25.80	14.50	12.25
TCE2B36S21S	TM9E080C16MP12	24.50	XAHD42E	1100.00	35.20	25.80	14.50	12.25
TCE2B36S21S	TM9E080C20MP12	21.00	CF/CM42C	1050.00	35.20	25.00	15.00	12.50
TCE2B36S21S	TM9E080C20MP12	21.00	XAF/XAUC42E	1025.00	35.00	24.80	15.00	12.50
TCE2B36S21S	TM9E080C20MP12	21.00	XAFC36D	1225.00	35.80	27.20	14.50	12.50
TCE2B36S21S	TM9E080C20MP12	24.50	XAFD42E	1025.00	35.00	24.80	15.00	12.50
TCE2B36S21S	TM9E080C20MP12	21.00	XAHC36D	1000.00	35.00	24.80	15.00	12.50
TCE2B36S21S	TM9E080C20MP12	21.00	XAHC42E	1000.00	35.00	24.60	15.00	12.50
TCE2B36S21S	TM9E080C20MP12	24.50	XAHD42E	1000.00	35.00	24.60	15.00	12.50
TCE2B36S21S	TM9E100C16MP12	21.00	CF/CM42C	1150.00	35.40	26.00	14.50	12.50
TCE2B36S21S	TM9E100C16MP12	21.00	XAF/XAUC42E	1125.00	35.40	26.00	14.75	12.50
TCE2B36S21S	TM9E100C16MP12	21.00	XAFC36D	1100.00	35.40	25.80	14.50	12.25
TCE2B36S21S	TM9E100C16MP12	24.50	XAFD42E	1125.00	35.40	26.00	14.75	12.50
TCE2B36S21S	TM9E100C16MP12	21.00	XAHC36D	1100.00	35.20	25.80	14.50	12.25
TCE2B36S21S	TM9E100C16MP12	21.00	XAHC42E	1100.00	35.20	25.80	14.50	12.25
TCE2B36S21S	TM9E100C16MP12	24.50	XAHD42E	1100.00	35.20	25.80	14.50	12.25
TCE2B36S21S	TM9E100C20MP12	21.00	CF/CM42C	1025.00	35.00	24.60	15.00	12.50

Table 11: Furnace capacity - 3 ton

Outdoor unit model	Furnace model	Furnace width (in.)	Indoor coil model	Rated CFM	Net cool (MBH)	Sens cool (MBH)	SEER2	EER2
TCE2B36S21S	TM9E100C20MP12	21.00	XAF/XAUC42E	1000.00	35.00	24.60	15.00	12.50
TCE2B36S21S	TM9E100C20MP12	21.00	XAFC36D	1000.00	35.00	24.60	15.00	12.50
TCE2B36S21S	TM9E100C20MP12	24.50	XAFD42E	1000.00	35.00	24.60	15.00	12.50
TCE2B36S21S	TM9E100C20MP12	21.00	XAHC36D	1200.00	35.40	26.60	14.50	12.25
TCE2B36S21S	TM9E100C20MP12	21.00	XAHC42E	1200.00	35.80	27.00	14.50	12.50
TCE2B36S21S	TM9E100C20MP12	24.50	XAHD42E	1200.00	35.80	27.00	14.75	12.50
TCE2B36S21S	TM9E120D20MP12	24.50	XAFD42E	1025.00	35.00	24.80	15.00	12.50
TCE2B36S21S	TM9E120D20MP12	24.50	XAHD42E	1025.00	35.00	24.80	15.00	12.50
TCE2B36S21S	TM9V060B12MP12C	21.00	CF/CM42C	1025.00	34.80	24.80	14.30	11.75
TCE2B36S21S	TM9V060B12MP12C	17.50	CF42B	1025.00	34.80	24.80	14.30	11.75
TCE2B36S21S	TM9V060B12MP12C	21.00	XAF/XAUC42E	1025.00	34.80	25.00	14.30	12.00
TCE2B36S21S	TM9V060B12MP12C	17.50	XAFB36E	1025.00	34.80	25.00	14.30	11.75
TCE2B36S21S	TM9V060B12MP12C	21.00	XAHC42E	1025.00	34.80	25.00	14.30	11.75
TCE2B36S21S	TM9V080B12MP12C	21.00	CF/CM42C	1000.00	34.80	24.40	14.50	12.50
TCE2B36S21S	TM9V080B12MP12C	17.50	CF42B	1000.00	34.80	24.40	14.30	12.25
TCE2B36S21S	TM9V080B12MP12C	17.50	XAF/XAUB36D	1000.00	34.80	24.80	14.50	12.25
TCE2B36S21S	TM9V080B12MP12C	21.00	XAF/XAUC42E	1000.00	34.80	24.60	14.50	12.25
TCE2B36S21S	TM9V080B12MP12C	17.50	XAFB36E	1000.00	34.80	24.80	14.50	12.25
TCE2B36S21S	TM9V080B12MP12C	21.00	XAFC36D	1000.00	34.80	24.80	14.50	12.25
TCE2B36S21S	TM9V080B12MP12C	17.50	XAHB36D	1075.00	34.80	25.40	14.30	11.75
TCE2B36S21S	TM9V080B12MP12C	21.00	XAHC36D	1000.00	34.80	24.80	14.50	12.25
TCE2B36S21S	TM9V080B12MP12C	21.00	XAHC42E	1000.00	34.80	24.60	14.50	12.25
TCE2B36S21S	TM9V080C16MP12C	21.00	CF/CM42C	1025.00	34.80	24.60	14.50	12.50
TCE2B36S21S	TM9V080C16MP12C	21.00	XAF/XAUC42E	1025.00	35.00	25.00	14.50	12.25
TCE2B36S21S	TM9V080C16MP12C	21.00	XAFC36D	1100.00	35.20	25.80	14.30	12.25
TCE2B36S21S	TM9V080C16MP12C	24.50	XAFD42E	1025.00	35.00	25.00	14.50	12.25
TCE2B36S21S	TM9V080C16MP12C	21.00	XAHC36D	1125.00	35.00	25.80	14.30	11.75
TCE2B36S21S	TM9V080C16MP12C	21.00	XAHC42E	1025.00	35.00	25.00	14.50	12.25
TCE2B36S21S	TM9V080C16MP12C	24.50	XAHD42E	1025.00	35.00	25.00	14.50	12.25
TCE2B36S21S	TM9V100C16MP12C	21.00	CF/CM42C	1000.00	34.80	24.40	14.75	12.50
TCE2B36S21S	TM9V100C16MP12C	21.00	XAF/XAUC42E	1000.00	35.00	24.80	14.75	12.50
TCE2B36S21S	TM9V100C16MP12C	21.00	XAFC36D	1000.00	35.00	24.80	14.75	12.50
TCE2B36S21S	TM9V100C16MP12C	24.50	XAFD42E	1000.00	35.00	24.80	15.00	12.50
TCE2B36S21S	TM9V100C16MP12C	21.00	XAHC36D	1000.00	34.80	24.60	14.75	12.50
TCE2B36S21S	TM9V100C16MP12C	21.00	XAHC42E	1000.00	35.00	24.80	14.75	12.50
TCE2B36S21S	TM9V100C16MP12C	24.50	XAHD42E	1000.00	35.00	24.80	14.75	12.50
TCE2B36S21S	TM9V100C20MP12C	21.00	CF/CM42C	1125.00	35.40	25.80	14.50	12.50
TCE2B36S21S	TM9V100C20MP12C	21.00	XAF/XAUC42E	1125.00	35.20	26.00	14.50	12.25
TCE2B36S21S	TM9V100C20MP12C	21.00	XAFC36D	1125.00	35.40	26.00	14.50	12.25
TCE2B36S21S	TM9V100C20MP12C	24.50	XAFD42E	1125.00	35.40	26.00	14.75	12.50
TCE2B36S21S	TM9V100C20MP12C	21.00	XAHC36D	1125.00	35.40	26.00	14.50	12.25
TCE2B36S21S	TM9V100C20MP12C	21.00	XAHC42E	1125.00	35.20	26.00	14.50	12.25
TCE2B36S21S	TM9V100C20MP12C	24.50	XAHD42E	1125.00	35.20	26.00	14.50	12.25
TCE2B36S21S	TM9V120D20MP12C	24.50	XAFD42E	1050.00	35.20	25.20	15.00	12.50
TCE2B36S21S	TM9V120D20MP12C	24.50	XAHD42E	1050.00	35.00	25.00	15.00	12.50
TCE2B36S21S	TM9Y060B12MP11	21.00	CF/CM42C	1025.00	34.80	24.80	14.30	11.75
TCE2B36S21S	TM9Y060B12MP11	17.50	CF42B	1000.00	34.80	24.60	14.30	11.75
TCE2B36S21S	TM9Y060B12MP11	17.50	XAF/XAUB36D	1000.00	34.80	24.80	14.30	11.75
TCE2B36S21S	TM9Y060B12MP11	21.00	XAF/XAUC42E	1000.00	35.00	25.00	14.30	12.00
TCE2B36S21S	TM9Y060B12MP11	17.50	XAFB36E	1075.00	35.00	25.60	14.30	12.00
TCE2B36S21S	TM9Y060B12MP11	21.00	XAFC36D	1000.00	34.80	24.80	14.30	11.75
TCE2B36S21S	TM9Y060B12MP11	21.00	XAHC36D	1000.00	34.80	24.80	14.30	11.75
TCE2B36S21S	TM9Y060B12MP11	21.00	XAHC42E	1075.00	35.00	25.60	14.30	11.75
TCE2B36S21S	TM9Y080B12MP11	21.00	CF/CM42C	1075.00	35.00	25.20	14.30	12.25
TCE2B36S21S	TM9Y080B12MP11	17.50	CF42B	1050.00	34.80	25.00	14.30	12.00
TCE2B36S21S	TM9Y080B12MP11	17.50	XAF/XAUB36D	1025.00	34.80	25.00	14.30	11.75
TCE2B36S21S	TM9Y080B12MP11	21.00	XAF/XAUC42E	1050.00	35.00	25.20	14.50	12.25
TCE2B36S21S	TM9Y080B12MP11	17.50	XAFB36E	1025.00	34.80	25.00	14.30	12.00
TCE2B36S21S	TM9Y080B12MP11	21.00	XAFC36D	1050.00	35.00	25.20	14.30	12.25
TCE2B36S21S	TM9Y080B12MP11	17.50	XAHB36D	1000.00	34.80	24.80	14.30	11.75
TCE2B36S21S	TM9Y080B12MP11	21.00	XAHC36D	1025.00	34.80	25.00	14.30	11.75
TCE2B36S21S	TM9Y080B12MP11	21.00	XAHC42E	1025.00	34.80	25.00	14.30	12.00
TCE2B36S21S	TM9Y080C16MP11	21.00	CF/CM42C	1000.00	34.80	24.40	14.50	12.50

Table 11: Furnace capacity - 3 ton

Outdoor unit model	Furnace model	Furnace width (in.)	Indoor coil model	Rated CFM	Net cool (MBH)	Sens cool (MBH)	SEER2	EER2
TCE2B36S21S	TM9Y080C16MP11	21.00	XAF/XAUC42E	1100.00	35.20	25.80	14.50	12.25
TCE2B36S21S	TM9Y080C16MP11	21.00	XAFC36D	1100.00	35.20	25.80	14.50	12.25
TCE2B36S21S	TM9Y080C16MP11	24.50	XAFD42E	1100.00	35.20	25.80	14.50	12.25
TCE2B36S21S	TM9Y080C16MP11	21.00	XAHC36D	1075.00	35.00	25.40	14.50	12.25
TCE2B36S21S	TM9Y080C16MP11	21.00	XAHC42E	1075.00	35.00	25.40	14.50	12.25
TCE2B36S21S	TM9Y080C16MP11	24.50	XAHD42E	1100.00	35.20	25.80	14.50	12.25
TCE2B36S21S	TM9Y100C16MP11	21.00	CF/CM42C	1000.00	34.80	24.40	14.75	12.50
TCE2B36S21S	TM9Y100C16MP11	21.00	XAF/XAUC42E	1100.00	35.20	25.80	14.50	12.25
TCE2B36S21S	TM9Y100C16MP11	21.00	XAFC36D	1075.00	35.00	25.40	14.50	12.25
TCE2B36S21S	TM9Y100C16MP11	24.50	XAFD42E	1100.00	35.20	25.80	14.50	12.50
TCE2B36S21S	TM9Y100C16MP11	21.00	XAHC36D	1075.00	35.00	25.40	14.50	12.25
TCE2B36S21S	TM9Y100C16MP11	21.00	XAHC42E	1075.00	35.00	25.40	14.50	12.25
TCE2B36S21S	TM9Y100C16MP11	24.50	XAHD42E	1075.00	35.00	25.40	14.50	12.25
TCE2B36S21S	TM9Y100C20MP11	21.00	CF/CM42C	1000.00	34.80	24.40	14.75	12.50
TCE2B36S21S	TM9Y100C20MP11	21.00	XAF/XAUC42E	1150.00	35.40	26.40	14.50	12.25
TCE2B36S21S	TM9Y100C20MP11	21.00	XAFC36D	1150.00	35.40	26.40	14.50	12.25
TCE2B36S21S	TM9Y100C20MP11	24.50	XAFD42E	1175.00	35.40	26.60	14.50	12.25
TCE2B36S21S	TM9Y100C20MP11	21.00	XAHC36D	1125.00	35.20	26.00	14.30	12.25
TCE2B36S21S	TM9Y100C20MP11	21.00	XAHC42E	1125.00	35.20	26.00	14.50	12.25
TCE2B36S21S	TM9Y100C20MP11	24.50	XAHD42E	1150.00	35.40	26.40	14.50	12.25
TCE2B36S21S	TM9Y120D20MP11	24.50	XAFD42E	1000.00	34.80	24.60	15.00	12.50
TCE2B36S21S	TM9Y120D20MP11	24.50	XAHD42E	1200.00	35.60	26.80	14.75	12.50
TCE2B36S21S	TMLE040A12MP11	17.50	CF42B	1075.00	35.00	25.20	14.50	12.25
TCE2B36S21S	TMLE040A12MP11	17.50	XAF/XAUB36D	1075.00	35.00	25.40	14.50	12.25
TCE2B36S21S	TMLE040A12MP11	17.50	XAFB36E	1075.00	35.00	25.40	14.50	12.25
TCE2B36S21S	TMLE040A12MP11	17.50	XAHB36D	1050.00	35.00	25.20	14.50	12.00
TCE2B36S21S	TMLE060A12MP11	17.50	CF42B	1100.00	35.00	25.60	14.30	11.75
TCE2B36S21S	TMLE060A12MP11	17.50	XAF/XAUB36D	1100.00	35.00	25.60	14.30	11.75
TCE2B36S21S	TMLE060A12MP11	17.50	XAFB36E	1100.00	35.00	25.80	14.30	12.00
TCE2B36S21S	TMLE060A12MP11	17.50	XAHB36D	1075.00	35.00	25.60	14.30	11.75
TCE2B36S21S	TMLE080B12MP11	21.00	CF/CM42C	1150.00	35.20	26.00	14.30	12.25
TCE2B36S21S	TMLE080B12MP11	17.50	CF42B	1100.00	35.00	25.60	14.30	11.75
TCE2B36S21S	TMLE080B12MP11	17.50	XAF/XAUB36D	1100.00	35.00	25.60	14.30	11.75
TCE2B36S21S	TMLE080B12MP11	21.00	XAF/XAUC42E	1100.00	35.00	25.80	14.30	12.00
TCE2B36S21S	TMLE080B12MP11	17.50	XAFB36E	1100.00	35.00	25.80	14.30	12.00
TCE2B36S21S	TMLE080B12MP11	21.00	XAFC36D	1100.00	35.00	25.60	14.30	11.75
TCE2B36S21S	TMLE080B12MP11	17.50	XAHB36D	1075.00	35.00	25.60	14.30	11.75
TCE2B36S21S	TMLE080B12MP11	21.00	XAHC36D	1100.00	35.00	25.60	14.30	11.75
TCE2B36S21S	TMLE080B12MP11	21.00	XAHC42E	1100.00	35.00	25.80	14.30	12.00
TCE2B36S21S	TMLE080C16MP11	21.00	CF/CM42C	1125.00	35.40	25.80	14.50	12.50
TCE2B36S21S	TMLE080C16MP11	21.00	XAF/XAUC42E	1100.00	35.20	25.60	14.75	12.50
TCE2B36S21S	TMLE080C16MP11	21.00	XAFC36D	1075.00	35.20	25.40	14.75	12.50
TCE2B36S21S	TMLE080C16MP11	24.50	XAFD42E	1100.00	35.20	25.60	14.75	12.50
TCE2B36S21S	TMLE080C16MP11	21.00	XAHC36D	1075.00	35.20	25.40	14.75	12.50
TCE2B36S21S	TMLE080C16MP11	21.00	XAHC42E	1075.00	35.20	25.60	14.75	12.50
TCE2B36S21S	TMLE080C16MP11	24.50	XAHD42E	1075.00	35.20	25.60	14.75	12.50
TCE2B36S21S	TMLE080C20MP11	21.00	CF/CM42C	1075.00	35.40	25.20	15.00	12.50
TCE2B36S21S	TMLE080C20MP11	21.00	XAF/XAUC42E	1025.00	35.20	25.00	15.00	12.50
TCE2B36S21S	TMLE080C20MP11	21.00	XAFC36D	1025.00	35.20	25.00	14.50	12.75
TCE2B36S21S	TMLE080C20MP11	24.50	XAFD42E	1025.00	35.20	25.00	15.00	12.50
TCE2B36S21S	TMLE080C20MP11	21.00	XAHC36D	1000.00	35.00	24.80	15.00	12.50
TCE2B36S21S	TMLE080C20MP11	21.00	XAHC42E	1000.00	35.00	24.60	15.00	12.50
TCE2B36S21S	TMLE080C20MP11	24.50	XAHD42E	1025.00	35.20	25.00	15.00	12.50
TCE2B36S21S	TMLE100B12MP11	21.00	CF/CM42C	1150.00	35.40	26.00	14.30	12.25
TCE2B36S21S	TMLE100B12MP11	17.50	CF42B	1100.00	35.00	25.40	14.30	12.00
TCE2B36S21S	TMLE100B12MP11	17.50	XAF/XAUB36D	1100.00	35.20	25.80	14.30	12.25
TCE2B36S21S	TMLE100B12MP11	21.00	XAF/XAUC42E	1100.00	35.00	25.60	14.50	12.25
TCE2B36S21S	TMLE100B12MP11	17.50	XAFB36E	1100.00	35.00	25.80	14.30	12.25
TCE2B36S21S	TMLE100B12MP11	21.00	XAFC36D	1100.00	35.20	25.80	14.30	12.25
TCE2B36S21S	TMLE100B12MP11	17.50	XAHB36D	1075.00	35.00	25.60	14.30	11.75
TCE2B36S21S	TMLE100B12MP11	21.00	XAHC36D	1100.00	35.20	25.80	14.30	12.25
TCE2B36S21S	TMLE100B12MP11	21.00	XAHC42E	1100.00	35.00	25.60	14.30	12.25
TCE2B36S21S	TMLE100C16MP11	21.00	CF/CM42C	1150.00	35.60	26.20	14.50	12.50

Table 11: Furnace capacity - 3 ton

Outdoor unit model	Furnace model	Furnace width (in.)	Indoor coil model	Rated CFM	Net cool (MBH)	Sens cool (MBH)	SEER2	EER2
TCE2B36S21S	TMLE100C16MP11	21.00	XAF/XAUC42E	1125.00	35.40	26.00	14.75	12.50
TCE2B36S21S	TMLE100C16MP11	21.00	XAFC36D	1125.00	35.40	26.00	14.75	12.50
TCE2B36S21S	TMLE100C16MP11	24.50	XAFD42E	1125.00	35.40	26.00	14.75	12.50
TCE2B36S21S	TMLE100C16MP11	21.00	XAHC36D	1100.00	35.40	25.80	14.75	12.50
TCE2B36S21S	TMLE100C16MP11	21.00	XAHC42E	1100.00	35.20	25.80	14.50	12.50
TCE2B36S21S	TMLE100C16MP11	24.50	XAHD42E	1100.00	35.20	25.80	14.75	12.50
TCE2B36S21S	TMLE100C20MP11	21.00	CF/CM42C	1075.00	35.40	25.40	15.00	12.50
TCE2B36S21S	TMLE100C20MP11	21.00	XAF/XAUC42E	1025.00	35.00	24.80	15.00	12.50
TCE2B36S21S	TMLE100C20MP11	21.00	XAFC36D	1250.00	35.80	27.40	14.50	12.25
TCE2B36S21S	TMLE100C20MP11	24.50	XAFD42E	1050.00	35.20	25.20	15.00	12.50
TCE2B36S21S	TMLE100C20MP11	21.00	XAHC36D	1250.00	35.80	27.40	14.50	12.25
TCE2B36S21S	TMLE100C20MP11	21.00	XAHC42E	1025.00	35.00	24.80	15.00	12.50
TCE2B36S21S	TMLE100C20MP11	24.50	XAHD42E	1025.00	35.00	24.80	15.00	12.50
TCE2B36S21S	TMLE120C16MP11	21.00	CF/CM42C	1175.00	35.60	26.40	14.75	12.50
TCE2B36S21S	TMLE120C16MP11	21.00	XAF/XAUC42E	1125.00	35.40	26.00	14.75	12.50
TCE2B36S21S	TMLE120C16MP11	21.00	XAFC36D	1125.00	35.40	26.00	14.75	12.50
TCE2B36S21S	TMLE120C16MP11	24.50	XAFD42E	1125.00	35.40	26.00	14.75	12.50
TCE2B36S21S	TMLE120C16MP11	21.00	XAHC36D	1100.00	35.40	25.80	14.50	12.50
TCE2B36S21S	TMLE120C16MP11	21.00	XAHC42E	1100.00	35.20	25.80	14.75	12.50
TCE2B36S21S	TMLE120C16MP11	24.50	XAHD42E	1125.00	35.40	26.00	14.75	12.50
TCE2B36S21S	TMLE120C20MP11	21.00	CF/CM42C	1125.00	35.60	25.80	15.00	12.50
TCE2B36S21S	TMLE120C20MP11	21.00	XAF/XAUC42E	1075.00	35.20	25.40	15.00	12.50
TCE2B36S21S	TMLE120C20MP11	21.00	XAFC36D	1075.00	35.40	25.60	15.00	12.50
TCE2B36S21S	TMLE120C20MP11	24.50	XAFD42E	1075.00	35.20	25.40	15.00	12.50
TCE2B36S21S	TMLE120C20MP11	21.00	XAHC36D	1050.00	35.20	25.20	15.00	12.50
TCE2B36S21S	TMLE120C20MP11	21.00	XAHC42E	1050.00	35.00	25.00	15.00	12.50
TCE2B36S21S	TMLE120C20MP11	24.50	XAHD42E	1075.00	35.20	25.40	15.00	12.50
TCE2B36S21S	TMLE130D20MP11	24.50	XAFD42E	1075.00	35.20	25.40	15.00	12.50
TCE2B36S21S	TMLE130D20MP11	24.50	XAHD42E	1050.00	35.00	25.00	15.00	12.50
TCE2B36S21S	TMLV060A12MP12C	17.50	CF42B	1050.00	34.80	25.00	14.30	12.25
TCE2B36S21S	TMLV060A12MP12C	17.50	XAF/XAUB36D	1050.00	35.00	25.20	14.50	12.25
TCE2B36S21S	TMLV060A12MP12C	17.50	XAFB36E	1050.00	34.80	25.20	14.50	12.25
TCE2B36S21S	TMLV060A12MP12C	17.50	XAHB36D	1050.00	34.80	25.20	14.30	11.75
TCE2B36S21S	TMLV100C16MP12C	21.00	CF/CM42C	1050.00	35.00	24.80	14.75	12.50
TCE2B36S21S	TMLV100C16MP12C	21.00	XAF/XAUC42E	1050.00	35.00	25.20	14.75	12.50
TCE2B36S21S	TMLV100C16MP12C	21.00	XAFC36D	1050.00	35.20	25.20	14.75	12.50
TCE2B36S21S	TMLV100C16MP12C	24.50	XAFD42E	1050.00	35.00	25.20	15.00	12.50
TCE2B36S21S	TMLV100C16MP12C	21.00	XAHC36D	1050.00	35.20	25.20	14.75	12.50
TCE2B36S21S	TMLV100C16MP12C	21.00	XAHC42E	1050.00	35.00	25.20	14.75	12.50
TCE2B36S21S	TMLV100C16MP12C	24.50	XAHD42E	1050.00	35.00	25.20	14.75	12.50
TCE2B36S21S	TMLV120C20MP12C	21.00	CF/CM42C	1100.00	35.40	25.60	14.75	12.50
TCE2B36S21S	TMLV120C20MP12C	21.00	XAF/XAUC42E	1075.00	35.20	25.40	15.00	12.50
TCE2B36S21S	TMLV120C20MP12C	21.00	XAFC36D	1075.00	35.20	25.40	14.75	12.50
TCE2B36S21S	TMLV120C20MP12C	24.50	XAFD42E	1075.00	35.20	25.40	15.00	12.50
TCE2B36S21S	TMLV120C20MP12C	21.00	XAHC36D	1075.00	35.20	25.40	14.75	12.50
TCE2B36S21S	TMLV120C20MP12C	21.00	XAHC42E	1075.00	35.20	25.60	14.75	12.50
TCE2B36S21S	TMLV120C20MP12C	24.50	XAHD42E	1075.00	35.20	25.40	14.75	12.50
TCE2B36S21S	TP9C060B12MP13C	21.00	CF/CM42C	1025.00	34.80	24.80	14.30	11.75
TCE2B36S21S	TP9C060B12MP13C	17.50	CF42B	1025.00	34.80	24.80	14.30	11.75
TCE2B36S21S	TP9C060B12MP13C	21.00	XAF/XAUC42E	1025.00	34.80	25.00	14.30	12.00
TCE2B36S21S	TP9C060B12MP13C	17.50	XAFB36E	1025.00	34.80	25.00	14.30	11.75
TCE2B36S21S	TP9C060B12MP13C	21.00	XAHC42E	1025.00	34.80	25.00	14.30	11.75
TCE2B36S21S	TP9C080B12MP13C	21.00	CF/CM42C	1000.00	34.80	24.40	14.50	12.50
TCE2B36S21S	TP9C080B12MP13C	17.50	CF42B	1000.00	34.80	24.40	14.30	12.25
TCE2B36S21S	TP9C080B12MP13C	17.50	XAF/XAUB36D	1000.00	34.80	24.80	14.50	12.25
TCE2B36S21S	TP9C080B12MP13C	21.00	XAF/XAUC42E	1000.00	34.80	24.60	14.50	12.25
TCE2B36S21S	TP9C080B12MP13C	17.50	XAFB36E	1000.00	34.80	24.80	14.50	12.25
TCE2B36S21S	TP9C080B12MP13C	21.00	XAFC36D	1000.00	34.80	24.80	14.50	12.25
TCE2B36S21S	TP9C080B12MP13C	17.50	XAHB36D	1075.00	34.80	25.40	14.30	11.75
TCE2B36S21S	TP9C080B12MP13C	21.00	XAHC36D	1000.00	34.80	24.80	14.50	12.25
TCE2B36S21S	TP9C080B12MP13C	21.00	XAHC42E	1000.00	34.80	24.60	14.50	12.25
TCE2B36S21S	TP9C080C16MP13C	21.00	CF/CM42C	1025.00	34.80	24.60	14.50	12.50
TCE2B36S21S	TP9C080C16MP13C	21.00	XAF/XAUC42E	1025.00	35.00	25.00	14.50	12.25

Table 11: Furnace capacity - 3 ton

Outdoor unit model	Furnace model	Furnace width (in.)	Indoor coil model	Rated CFM	Net cool (MBH)	Sens cool (MBH)	SEER2	EER2
TCE2B36S21S	TP9C080C16MP13C	21.00	XAFC36D	1100.00	35.20	25.80	14.30	12.25
TCE2B36S21S	TP9C080C16MP13C	24.50	XAFD42E	1025.00	35.00	25.00	14.50	12.25
TCE2B36S21S	TP9C080C16MP13C	21.00	XAHC36D	1125.00	35.00	25.80	14.30	11.75
TCE2B36S21S	TP9C080C16MP13C	21.00	XAHC42E	1025.00	35.00	25.00	14.50	12.25
TCE2B36S21S	TP9C080C16MP13C	24.50	XAHD42E	1025.00	35.00	25.00	14.50	12.25
TCE2B36S21S	TP9C100C16MP13C	21.00	CF/CM42C	1000.00	34.80	24.40	14.75	12.50
TCE2B36S21S	TP9C100C16MP13C	21.00	XAF/XAUC42E	1000.00	35.00	24.80	14.75	12.50
TCE2B36S21S	TP9C100C16MP13C	21.00	XAFC36D	1000.00	35.00	24.80	14.75	12.50
TCE2B36S21S	TP9C100C16MP13C	24.50	XAFD42E	1000.00	35.00	24.80	15.00	12.50
TCE2B36S21S	TP9C100C16MP13C	21.00	XAHC36D	1000.00	34.80	24.60	14.75	12.50
TCE2B36S21S	TP9C100C16MP13C	21.00	XAHC42E	1000.00	35.00	24.80	14.75	12.50
TCE2B36S21S	TP9C100C16MP13C	24.50	XAHD42E	1000.00	35.00	24.80	14.75	12.50
TCE2B36S21S	TP9C100C20MP13C	21.00	CF/CM42C	1125.00	35.40	25.80	14.50	12.50
TCE2B36S21S	TP9C100C20MP13C	21.00	XAF/XAUC42E	1125.00	35.20	26.00	14.50	12.25
TCE2B36S21S	TP9C100C20MP13C	21.00	XAFC36D	1125.00	35.40	26.00	14.50	12.25
TCE2B36S21S	TP9C100C20MP13C	24.50	XAFD42E	1125.00	35.40	26.00	14.75	12.50
TCE2B36S21S	TP9C100C20MP13C	21.00	XAHC36D	1125.00	35.40	26.00	14.50	12.25
TCE2B36S21S	TP9C100C20MP13C	21.00	XAHC42E	1125.00	35.20	26.00	14.50	12.25
TCE2B36S21S	TP9C100C20MP13C	24.50	XAHD42E	1125.00	35.20	26.00	14.50	12.25
TCE2B36S21S	TP9C120D20MP13C	24.50	XAFD42E	1050.00	35.20	25.20	15.00	12.50
TCE2B36S21S	TP9C120D20MP13C	24.50	XAHD42E	1050.00	35.00	25.00	15.00	12.50
TCE2B36S21S	TPLC060A12MP13C	17.50	CF42B	1050.00	34.80	25.00	14.30	12.25
TCE2B36S21S	TPLC060A12MP13C	17.50	XAF/XAUB36D	1050.00	35.00	25.20	14.50	12.25
TCE2B36S21S	TPLC060A12MP13C	17.50	XAFB36E	1050.00	34.80	25.20	14.50	12.25
TCE2B36S21S	TPLC060A12MP13C	17.50	XAHB36D	1050.00	34.80	25.20	14.30	11.75
TCE2B36S21S	TPLC080B12MP13C	21.00	CF/CM42C	1000.00	34.80	24.60	14.30	11.75
TCE2B36S21S	TPLC080B12MP13C	17.50	CF42B	1000.00	34.80	24.60	14.30	11.75
TCE2B36S21S	TPLC080B12MP13C	17.50	XAF/XAUB36D	1000.00	34.80	24.80	14.30	11.75
TCE2B36S21S	TPLC080B12MP13C	21.00	XAF/XAUC42E	1000.00	34.80	24.80	14.30	12.00
TCE2B36S21S	TPLC080B12MP13C	21.00	XAFC36D	1000.00	34.80	24.80	14.30	11.75
TCE2B36S21S	TPLC080B12MP13C	21.00	XAHC36D	1000.00	34.80	25.00	14.30	11.75
TCE2B36S21S	TPLC080B12MP13C	21.00	XAHC42E	1000.00	34.80	24.80	14.30	11.75
TCE2B36S21S	TPLC080C16MP13C	21.00	CF/CM42C	1050.00	35.00	24.80	14.75	12.50
TCE2B36S21S	TPLC080C16MP13C	21.00	XAF/XAUC42E	1050.00	35.00	25.20	14.75	12.50
TCE2B36S21S	TPLC080C16MP13C	21.00	XAFC36D	1050.00	35.20	25.20	14.75	12.50
TCE2B36S21S	TPLC080C16MP13C	24.50	XAFD42E	1050.00	35.00	25.20	15.00	12.50
TCE2B36S21S	TPLC080C16MP13C	21.00	XAHC36D	1050.00	35.20	25.20	14.75	12.50
TCE2B36S21S	TPLC080C16MP13C	21.00	XAHC42E	1050.00	35.00	25.20	14.75	12.50
TCE2B36S21S	TPLC080C16MP13C	24.50	XAHD42E	1050.00	35.00	25.20	14.75	12.50
TCE2B36S21S	TPLC100C16MP13C	21.00	CF/CM42C	1050.00	35.00	24.80	14.75	12.50
TCE2B36S21S	TPLC100C16MP13C	21.00	XAF/XAUC42E	1050.00	35.00	25.20	14.75	12.50
TCE2B36S21S	TPLC100C16MP13C	21.00	XAFC36D	1050.00	35.20	25.20	14.75	12.50
TCE2B36S21S	TPLC100C16MP13C	24.50	XAFD42E	1050.00	35.00	25.20	15.00	12.50
TCE2B36S21S	TPLC100C16MP13C	21.00	XAHC36D	1050.00	35.20	25.20	14.75	12.50
TCE2B36S21S	TPLC100C16MP13C	21.00	XAHC42E	1050.00	35.00	25.20	14.75	12.50
TCE2B36S21S	TPLC100C16MP13C	24.50	XAHD42E	1050.00	35.00	25.20	14.75	12.50
TCE2B36S21S	TPLC100C20MP13C	21.00	CF/CM42C	1100.00	35.40	25.60	14.75	12.50
TCE2B36S21S	TPLC100C20MP13C	21.00	XAF/XAUC42E	1075.00	35.20	25.40	15.00	12.50
TCE2B36S21S	TPLC100C20MP13C	21.00	XAFC36D	1075.00	35.20	25.40	14.75	12.50
TCE2B36S21S	TPLC100C20MP13C	24.50	XAFD42E	1075.00	35.20	25.40	15.00	12.50
TCE2B36S21S	TPLC100C20MP13C	21.00	XAHC36D	1075.00	35.20	25.40	14.75	12.50
TCE2B36S21S	TPLC100C20MP13C	21.00	XAHC42E	1075.00	35.20	25.60	14.75	12.50
TCE2B36S21S	TPLC100C20MP13C	24.50	XAHD42E	1075.00	35.20	25.40	14.75	12.50
TCE2B36S21S	TPLC120C20MP13C	21.00	CF/CM42C	1100.00	35.40	25.60	14.75	12.50
TCE2B36S21S	TPLC120C20MP13C	21.00	XAF/XAUC42E	1075.00	35.20	25.40	15.00	12.50
TCE2B36S21S	TPLC120C20MP13C	21.00	XAFC36D	1075.00	35.20	25.40	14.75	12.50
TCE2B36S21S	TPLC120C20MP13C	24.50	XAFD42E	1075.00	35.20	25.40	15.00	12.50
TCE2B36S21S	TPLC120C20MP13C	21.00	XAHC36D	1075.00	35.20	25.40	14.75	12.50
TCE2B36S21S	TPLC120C20MP13C	21.00	XAHC42E	1075.00	35.20	25.60	14.75	12.50
TCE2B36S21S	TPLC120C20MP13C	24.50	XAHD42E	1075.00	35.20	25.40	14.75	12.50
TCE2B36S21S	CP9C060B12MP13C	21.00	CF/CM42C	1025.00	34.80	24.80	14.30	11.75
TCE2B36S21S	CP9C060B12MP13C	17.50	CF42B	1025.00	34.80	24.80	14.30	11.75
TCE2B36S21S	CP9C060B12MP13C	21.00	XAF/XAUC42E	1025.00	34.80	25.00	14.30	12.00

Table 11: Furnace capacity - 3 ton

Outdoor unit model	Furnace model	Furnace width (in.)	Indoor coil model	Rated CFM	Net cool (MBH)	Sens cool (MBH)	SEER2	EER2
TCE2B36S21S	CP9C060B12MP13C	17.50	XAFB36E	1025.00	34.80	25.00	14.30	11.75
TCE2B36S21S	CP9C060B12MP13C	21.00	XAHC42E	1025.00	34.80	25.00	14.30	11.75
TCE2B36S21S	CP9C080B12MP13C	21.00	CF/CM42C	1000.00	34.80	24.40	14.50	12.50
TCE2B36S21S	CP9C080B12MP13C	17.50	CF42B	1000.00	34.80	24.40	14.30	12.25
TCE2B36S21S	CP9C080B12MP13C	17.50	XAF/XAUB36D	1000.00	34.80	24.80	14.50	12.25
TCE2B36S21S	CP9C080B12MP13C	21.00	XAF/XAUC42E	1000.00	34.80	24.60	14.50	12.25
TCE2B36S21S	CP9C080B12MP13C	17.50	XAFB36E	1000.00	34.80	24.80	14.50	12.25
TCE2B36S21S	CP9C080B12MP13C	21.00	XAFC36D	1000.00	34.80	24.80	14.50	12.25
TCE2B36S21S	CP9C080B12MP13C	17.50	XAHB36D	1075.00	34.80	25.40	14.30	11.75
TCE2B36S21S	CP9C080B12MP13C	21.00	XAHC36D	1000.00	34.80	24.80	14.50	12.25
TCE2B36S21S	CP9C080B12MP13C	21.00	XAHC42E	1000.00	34.80	24.60	14.50	12.25
TCE2B36S21S	CP9C080C16MP13C	21.00	CF/CM42C	1025.00	34.80	24.60	14.50	12.50
TCE2B36S21S	CP9C080C16MP13C	21.00	XAF/XAUC42E	1025.00	35.00	25.00	14.50	12.25
TCE2B36S21S	CP9C080C16MP13C	21.00	XAFC36D	1100.00	35.20	25.80	14.30	12.25
TCE2B36S21S	CP9C080C16MP13C	24.50	XAFD42E	1025.00	35.00	25.00	14.50	12.25
TCE2B36S21S	CP9C080C16MP13C	21.00	XAHC36D	1125.00	35.00	25.80	14.30	11.75
TCE2B36S21S	CP9C080C16MP13C	21.00	XAHC42E	1025.00	35.00	25.00	14.50	12.25
TCE2B36S21S	CP9C080C16MP13C	24.50	XAHD42E	1025.00	35.00	25.00	14.50	12.25
TCE2B36S21S	CP9C100C16MP13C	21.00	CF/CM42C	1000.00	34.80	24.40	14.75	12.50
TCE2B36S21S	CP9C100C16MP13C	21.00	XAF/XAUC42E	1000.00	35.00	24.80	14.75	12.50
TCE2B36S21S	CP9C100C16MP13C	21.00	XAFC36D	1000.00	35.00	24.80	14.75	12.50
TCE2B36S21S	CP9C100C16MP13C	24.50	XAFD42E	1000.00	35.00	24.80	15.00	12.50
TCE2B36S21S	CP9C100C16MP13C	21.00	XAHC36D	1000.00	34.80	24.60	14.75	12.50
TCE2B36S21S	CP9C100C16MP13C	21.00	XAHC42E	1000.00	35.00	24.80	14.75	12.50
TCE2B36S21S	CP9C100C16MP13C	24.50	XAHD42E	1000.00	35.00	24.80	14.75	12.50
TCE2B36S21S	CP9C100C20MP13C	21.00	CF/CM42C	1125.00	35.40	25.80	14.50	12.50
TCE2B36S21S	CP9C100C20MP13C	21.00	XAF/XAUC42E	1125.00	35.20	26.00	14.50	12.25
TCE2B36S21S	CP9C100C20MP13C	21.00	XAFC36D	1125.00	35.40	26.00	14.50	12.25
TCE2B36S21S	CP9C100C20MP13C	24.50	XAFD42E	1125.00	35.40	26.00	14.75	12.50
TCE2B36S21S	CP9C100C20MP13C	21.00	XAHC36D	1125.00	35.40	26.00	14.50	12.25
TCE2B36S21S	CP9C100C20MP13C	21.00	XAHC42E	1125.00	35.20	26.00	14.50	12.25
TCE2B36S21S	CP9C100C20MP13C	24.50	XAHD42E	1125.00	35.20	26.00	14.50	12.25
TCE2B36S21S	CP9C120D20MP13C	24.50	XAFD42E	1050.00	35.20	25.20	15.00	12.50
TCE2B36S21S	CP9C120D20MP13C	24.50	XAHD42E	1050.00	35.00	25.00	15.00	12.50
TCE2B36S21S	CPLC060A12MP13C	17.50	CF42B	1050.00	34.80	25.00	14.30	12.25
TCE2B36S21S	CPLC060A12MP13C	17.50	XAF/XAUB36D	1050.00	35.00	25.20	14.50	12.25
TCE2B36S21S	CPLC060A12MP13C	17.50	XAFB36E	1050.00	34.80	25.20	14.50	12.25
TCE2B36S21S	CPLC060A12MP13C	17.50	XAHB36D	1050.00	34.80	25.20	14.30	11.75
TCE2B36S21S	CPLC080B12MP13C	21.00	CF/CM42C	1000.00	34.80	24.60	14.30	11.75
TCE2B36S21S	CPLC080B12MP13C	17.50	CF42B	1000.00	34.80	24.60	14.30	11.75
TCE2B36S21S	CPLC080B12MP13C	17.50	XAF/XAUB36D	1000.00	34.80	24.80	14.30	11.75
TCE2B36S21S	CPLC080B12MP13C	21.00	XAF/XAUC42E	1000.00	34.80	24.80	14.30	12.00
TCE2B36S21S	CPLC080B12MP13C	21.00	XAFC36D	1000.00	34.80	24.80	14.30	11.75
TCE2B36S21S	CPLC080B12MP13C	21.00	XAHC36D	1000.00	34.80	25.00	14.30	11.75
TCE2B36S21S	CPLC080B12MP13C	21.00	XAHC42E	1000.00	34.80	24.80	14.30	11.75
TCE2B36S21S	CPLC080C16MP13C	21.00	CF/CM42C	1050.00	35.00	24.80	14.75	12.50
TCE2B36S21S	CPLC080C16MP13C	21.00	XAF/XAUC42E	1050.00	35.00	25.20	14.75	12.50
TCE2B36S21S	CPLC080C16MP13C	21.00	XAFC36D	1050.00	35.20	25.20	14.75	12.50
TCE2B36S21S	CPLC080C16MP13C	24.50	XAFD42E	1050.00	35.00	25.20	15.00	12.50
TCE2B36S21S	CPLC080C16MP13C	21.00	XAHC36D	1050.00	35.20	25.20	14.75	12.50
TCE2B36S21S	CPLC080C16MP13C	21.00	XAHC42E	1050.00	35.00	25.20	14.75	12.50
TCE2B36S21S	CPLC080C16MP13C	24.50	XAHD42E	1050.00	35.00	25.20	14.75	12.50
TCE2B36S21S	CPLC100C16MP13C	21.00	CF/CM42C	1050.00	35.00	24.80	14.75	12.50
TCE2B36S21S	CPLC100C16MP13C	21.00	XAF/XAUC42E	1050.00	35.00	25.20	14.75	12.50
TCE2B36S21S	CPLC100C16MP13C	21.00	XAFC36D	1050.00	35.20	25.20	14.75	12.50
TCE2B36S21S	CPLC100C16MP13C	24.50	XAFD42E	1050.00	35.00	25.20	15.00	12.50
TCE2B36S21S	CPLC100C16MP13C	21.00	XAHC36D	1050.00	35.20	25.20	14.75	12.50
TCE2B36S21S	CPLC100C16MP13C	21.00	XAHC42E	1050.00	35.00	25.20	14.75	12.50
TCE2B36S21S	CPLC100C16MP13C	24.50	XAHD42E	1050.00	35.00	25.20	14.75	12.50
TCE2B36S21S	CPLC100C20MP13C	21.00	CF/CM42C	1100.00	35.40	25.60	14.75	12.50
TCE2B36S21S	CPLC100C20MP13C	21.00	XAF/XAUC42E	1075.00	35.20	25.40	15.00	12.50
TCE2B36S21S	CPLC100C20MP13C	21.00	XAFC36D	1075.00	35.20	25.40	14.75	12.50
TCE2B36S21S	CPLC100C20MP13C	24.50	XAFD42E	1075.00	35.20	25.40	15.00	12.50

Table 11: Furnace capacity - 3 ton

Outdoor unit model	Furnace model	Furnace width (in.)	Indoor coil model	Rated CFM	Net cool (MBH)	Sens cool (MBH)	SEER2	EER2
TCE2B36S21S	CPLC100C20MP13C	21.00	XAHC36D	1075.00	35.20	25.40	14.75	12.50
TCE2B36S21S	CPLC100C20MP13C	21.00	XAHC42E	1075.00	35.20	25.60	14.75	12.50
TCE2B36S21S	CPLC100C20MP13C	24.50	XAHD42E	1075.00	35.20	25.40	14.75	12.50
TCE2B36S21S	CPLC120C20MP13C	21.00	CF/CM42C	1100.00	35.40	25.60	14.75	12.50
TCE2B36S21S	CPLC120C20MP13C	21.00	XAF/XAUC42E	1075.00	35.20	25.40	15.00	12.50
TCE2B36S21S	CPLC120C20MP13C	21.00	XAFC36D	1075.00	35.20	25.40	14.75	12.50
TCE2B36S21S	CPLC120C20MP13C	24.50	XAFD42E	1075.00	35.20	25.40	15.00	12.50
TCE2B36S21S	CPLC120C20MP13C	21.00	XAHC36D	1075.00	35.20	25.40	14.75	12.50
TCE2B36S21S	CPLC120C20MP13C	21.00	XAHC42E	1075.00	35.20	25.60	14.75	12.50
TCE2B36S21S	CPLC120C20MP13C	24.50	XAHD42E	1075.00	35.20	25.40	14.75	12.50

Furnace capacity - 3.5 ton

Table 12: Furnace capacity - 3.5 ton

Outdoor unit model	Furnace model	Furnace width (in.)	Indoor coil model	Rated CFM	Net cool (MBH)	Sens cool (MBH)	SEER2	EER2
TCE2B42S21S	TL8E080C16UH11	21.00	CF/CM42C	1275.00	39.50	28.60	14.75	12.50
TCE2B42S21S	TL8E080C16UH11	21.00	CF/CM48C	1275.00	39.50	28.80	14.75	12.50
TCE2B42S21S	TL8E080C16UH11	24.50	CF/CM48D	1275.00	39.50	28.80	14.75	12.50
TCE2B42S21S	TL8E080C16UH11	21.00	XAF/XAUC42E	1225.00	40.00	28.80	14.75	12.50
TCE2B42S21S	TL8E080C16UH11	21.00	XAF/XAUC48F	1250.00	40.00	28.80	14.75	12.50
TCE2B42S21S	TL8E080C16UH11	24.50	XAFD42E	1250.00	40.00	29.00	15.00	12.50
TCE2B42S21S	TL8E080C16UH11	24.50	XAFD48F	1250.00	40.00	28.80	14.75	12.50
TCE2B42S21S	TL8E080C16UH11	21.00	XAHC42E	1200.00	39.50	28.20	14.75	12.50
TCE2B42S21S	TL8E080C16UH11	21.00	XAHC48F	1250.00	40.00	28.80	14.75	12.50
TCE2B42S21S	TL8E080C16UH11	24.50	XAHD42E	1225.00	40.00	28.80	14.75	12.50
TCE2B42S21S	TL8E080C16UH11	24.50	XAHD48F	1250.00	40.00	28.80	14.75	12.50
TCE2B42S21S	TL8E100C20UH11	21.00	CF/CM42C	1275.00	40.00	28.80	15.00	12.50
TCE2B42S21S	TL8E100C20UH11	21.00	CF/CM48C	1275.00	40.50	29.20	15.00	12.50
TCE2B42S21S	TL8E100C20UH11	24.50	CF/CM48D	1300.00	40.50	29.40	15.25	12.75
TCE2B42S21S	TL8E100C20UH11	21.00	XAF/XAUC42E	1225.00	40.00	28.60	15.25	12.75
TCE2B42S21S	TL8E100C20UH11	21.00	XAF/XAUC48F	1250.00	40.00	28.60	15.25	12.75
TCE2B42S21S	TL8E100C20UH11	24.50	XAFD42E	1250.00	40.50	29.20	15.25	12.75
TCE2B42S21S	TL8E100C20UH11	24.50	XAFD48F	1250.00	40.00	28.60	15.25	12.75
TCE2B42S21S	TL8E100C20UH11	21.00	XAHC42E	1200.00	40.00	28.60	15.00	12.50
TCE2B42S21S	TL8E100C20UH11	21.00	XAHC48F	1250.00	40.00	28.60	15.25	12.75
TCE2B42S21S	TL8E100C20UH11	24.50	XAHD42E	1225.00	40.00	28.60	15.25	12.75
TCE2B42S21S	TL8E100C20UH11	24.50	XAHD48F	1250.00	40.00	28.60	15.25	12.75
TCE2B42S21S	TL9E080C16UH11	21.00	CF/CM42C	1300.00	40.00	29.20	14.50	12.25
TCE2B42S21S	TL9E080C16UH11	21.00	CF/CM48C	1325.00	40.00	29.60	14.50	12.25
TCE2B42S21S	TL9E080C16UH11	24.50	CF/CM48D	1325.00	40.00	29.60	14.50	12.25
TCE2B42S21S	TL9E080C16UH11	21.00	XAF/XAUC42E	1275.00	40.00	29.20	14.50	12.25
TCE2B42S21S	TL9E080C16UH11	21.00	XAF/XAUC48F	1300.00	40.00	29.20	14.50	12.25
TCE2B42S21S	TL9E080C16UH11	24.50	XAFD42E	1300.00	40.00	29.40	14.75	12.50
TCE2B42S21S	TL9E080C16UH11	24.50	XAFD48F	1300.00	40.00	29.20	14.50	12.25
TCE2B42S21S	TL9E080C16UH11	21.00	XAHC42E	1275.00	40.00	29.40	14.50	12.25
TCE2B42S21S	TL9E080C16UH11	21.00	XAHC48F	1300.00	40.00	29.20	14.50	12.25
TCE2B42S21S	TL9E080C16UH11	24.50	XAHD42E	1275.00	40.00	29.20	14.50	12.25
TCE2B42S21S	TL9E080C16UH11	24.50	XAHD48F	1300.00	40.00	29.20	14.50	12.25
TCE2B42S21S	TL9E100C20UH11	21.00	CF/CM42C	1275.00	39.50	28.60	14.75	12.50
TCE2B42S21S	TL9E100C20UH11	21.00	CF/CM48C	1275.00	39.50	28.60	15.00	12.50
TCE2B42S21S	TL9E100C20UH11	24.50	CF/CM48D	1300.00	40.50	29.60	15.00	12.50
TCE2B42S21S	TL9E100C20UH11	21.00	XAF/XAUC42E	1225.00	40.00	28.80	15.00	12.50
TCE2B42S21S	TL9E100C20UH11	21.00	XAF/XAUC48F	1250.00	40.00	28.60	15.00	12.50
TCE2B42S21S	TL9E100C20UH11	24.50	XAFD42E	1250.00	40.00	29.00	15.00	12.50
TCE2B42S21S	TL9E100C20UH11	24.50	XAFD48F	1250.00	40.00	28.60	15.00	12.50
TCE2B42S21S	TL9E100C20UH11	21.00	XAHC42E	1200.00	40.00	28.60	15.00	12.50
TCE2B42S21S	TL9E100C20UH11	21.00	XAHC48F	1250.00	40.00	28.60	15.00	12.50
TCE2B42S21S	TL9E100C20UH11	24.50	XAHD42E	1225.00	40.00	28.80	15.00	12.50
TCE2B42S21S	TL9E100C20UH11	24.50	XAHD48F	1250.00	40.00	28.60	15.00	12.50
TCE2B42S21S	TM8E080B12MP11	21.00	CF/CM42C	1250.00	39.50	28.60	14.30	11.75

Table 12: Furnace capacity - 3.5 ton

Outdoor unit model	Furnace model	Furnace width (in.)	Indoor coil model	Rated CFM	Net cool (MBH)	Sens cool (MBH)	SEER2	EER2
TCE2B42S21S	TM8E080B12MP11	21.00	CF/CM48C	1250.00	39.50	28.80	14.30	11.75
TCE2B42S21S	TM8E080B12MP11	21.00	XAF/XAUC42E	1225.00	39.50	28.60	14.30	11.75
TCE2B42S21S	TM8E080B12MP11	21.00	XAF/XAUC48F	1225.00	39.50	28.40	14.30	11.75
TCE2B42S21S	TM8E080B12MP11	21.00	XAHC42E	1200.00	39.50	28.40	14.30	11.75
TCE2B42S21S	TM8E080B12MP11	21.00	XAHC48F	1225.00	39.50	28.40	14.30	11.75
TCE2B42S21S	TM8E080C16MP11	21.00	CF/CM42C	1475.00	40.00	30.60	14.30	12.00
TCE2B42S21S	TM8E080C16MP11	21.00	CF/CM48C	1475.00	40.00	30.80	14.30	12.00
TCE2B42S21S	TM8E080C16MP11	24.50	CF/CM48D	1500.00	40.50	31.20	14.50	12.00
TCE2B42S21S	TM8E080C16MP11	21.00	XAF/XAUC42E	1425.00	40.50	31.00	14.30	12.00
TCE2B42S21S	TM8E080C16MP11	21.00	XAF/XAUC48F	1450.00	40.50	30.60	14.30	12.00
TCE2B42S21S	TM8E080C16MP11	24.50	XAFD42E	1450.00	40.50	31.00	14.30	12.00
TCE2B42S21S	TM8E080C16MP11	24.50	XAFD48F	1475.00	40.50	30.80	14.30	12.00
TCE2B42S21S	TM8E080C16MP11	21.00	XAHC42E	1400.00	40.50	30.80	14.30	11.75
TCE2B42S21S	TM8E080C16MP11	21.00	XAHC48F	1450.00	40.50	30.60	14.30	12.00
TCE2B42S21S	TM8E080C16MP11	24.50	XAHD42E	1425.00	40.50	31.00	14.30	12.00
TCE2B42S21S	TM8E080C16MP11	24.50	XAHD48F	1450.00	40.50	30.60	14.30	12.00
TCE2B42S21S	TM8E080C20MP11	21.00	CF/CM42C	1325.00	40.00	29.20	15.00	12.50
TCE2B42S21S	TM8E080C20MP11	21.00	CF/CM48C	1325.00	40.00	29.40	15.00	12.50
TCE2B42S21S	TM8E080C20MP11	24.50	CF/CM48D	1325.00	40.50	29.80	15.00	12.50
TCE2B42S21S	TM8E080C20MP11	21.00	XAF/XAUC42E	1275.00	40.50	29.40	15.00	12.50
TCE2B42S21S	TM8E080C20MP11	21.00	XAF/XAUC48F	1275.00	40.00	28.80	15.00	12.50
TCE2B42S21S	TM8E080C20MP11	24.50	XAFD42E	1275.00	40.50	29.40	15.25	12.75
TCE2B42S21S	TM8E080C20MP11	24.50	XAFD48F	1300.00	40.00	29.00	15.00	12.50
TCE2B42S21S	TM8E080C20MP11	21.00	XAHC42E	1250.00	40.00	29.00	15.00	12.50
TCE2B42S21S	TM8E080C20MP11	21.00	XAHC48F	1300.00	40.00	29.00	15.00	12.50
TCE2B42S21S	TM8E080C20MP11	24.50	XAHD42E	1250.00	40.00	29.00	15.00	12.50
TCE2B42S21S	TM8E080C20MP11	24.50	XAHD48F	1300.00	40.00	29.00	15.00	12.50
TCE2B42S21S	TM8E100C16MP11	21.00	CF/CM42C	1475.00	40.00	30.60	14.30	12.00
TCE2B42S21S	TM8E100C16MP11	21.00	CF/CM48C	1475.00	40.00	30.80	14.30	12.00
TCE2B42S21S	TM8E100C16MP11	24.50	CF/CM48D	1500.00	40.50	31.20	14.50	12.25
TCE2B42S21S	TM8E100C16MP11	21.00	XAF/XAUC42E	1425.00	40.50	31.00	14.30	12.00
TCE2B42S21S	TM8E100C16MP11	21.00	XAF/XAUC48F	1450.00	40.50	30.60	14.30	12.00
TCE2B42S21S	TM8E100C16MP11	24.50	XAFD42E	1450.00	40.50	31.00	14.50	12.25
TCE2B42S21S	TM8E100C16MP11	24.50	XAFD48F	1450.00	40.50	30.60	14.30	12.00
TCE2B42S21S	TM8E100C16MP11	21.00	XAHC42E	1400.00	40.50	30.80	14.30	11.75
TCE2B42S21S	TM8E100C16MP11	21.00	XAHC48F	1450.00	40.50	30.60	14.30	12.00
TCE2B42S21S	TM8E100C16MP11	24.50	XAHD42E	1425.00	40.50	31.00	14.30	12.00
TCE2B42S21S	TM8E100C16MP11	24.50	XAHD48F	1450.00	40.50	30.60	14.30	12.00
TCE2B42S21S	TM8E100C20MP11	21.00	CF/CM42C	1300.00	40.00	29.00	15.00	12.50
TCE2B42S21S	TM8E100C20MP11	21.00	CF/CM48C	1300.00	40.00	29.20	15.00	12.50
TCE2B42S21S	TM8E100C20MP11	24.50	CF/CM48D	1325.00	40.50	29.60	15.00	12.50
TCE2B42S21S	TM8E100C20MP11	21.00	XAF/XAUC42E	1250.00	40.00	29.00	15.00	12.50
TCE2B42S21S	TM8E100C20MP11	21.00	XAF/XAUC48F	1275.00	40.00	28.80	15.00	12.50
TCE2B42S21S	TM8E100C20MP11	24.50	XAFD42E	1275.00	40.50	29.40	15.25	12.75
TCE2B42S21S	TM8E100C20MP11	24.50	XAFD48F	1300.00	40.00	29.00	15.25	12.75
TCE2B42S21S	TM8E100C20MP11	21.00	XAHC42E	1250.00	40.00	29.00	15.00	12.50
TCE2B42S21S	TM8E100C20MP11	21.00	XAHC48F	1275.00	40.00	28.80	15.00	12.50
TCE2B42S21S	TM8E100C20MP11	24.50	XAHD42E	1250.00	40.00	29.00	15.00	12.50
TCE2B42S21S	TM8E100C20MP11	24.50	XAHD48F	1275.00	40.00	28.80	15.00	12.50
TCE2B42S21S	TM8E120C16MP11	21.00	CF/CM42C	1475.00	40.00	30.60	14.30	12.00
TCE2B42S21S	TM8E120C16MP11	21.00	CF/CM48C	1475.00	40.00	30.80	14.30	12.00
TCE2B42S21S	TM8E120C16MP11	24.50	CF/CM48D	1500.00	40.50	31.20	14.50	12.25
TCE2B42S21S	TM8E120C16MP11	21.00	XAF/XAUC42E	1450.00	40.50	31.00	14.30	12.00
TCE2B42S21S	TM8E120C16MP11	21.00	XAF/XAUC48F	1450.00	40.50	30.60	14.30	12.00
TCE2B42S21S	TM8E120C16MP11	24.50	XAFD42E	1450.00	40.50	31.00	14.50	12.25
TCE2B42S21S	TM8E120C16MP11	24.50	XAFD48F	1475.00	40.50	30.80	14.50	12.25
TCE2B42S21S	TM8E120C16MP11	21.00	XAHC42E	1425.00	40.50	31.00	14.30	12.00
TCE2B42S21S	TM8E120C16MP11	21.00	XAHC48F	1450.00	40.50	30.60	14.30	12.00
TCE2B42S21S	TM8E120C16MP11	24.50	XAHD42E	1425.00	40.50	31.00	14.30	12.00
TCE2B42S21S	TM8E120C16MP11	24.50	XAHD48F	1475.00	40.50	30.80	14.50	12.25
TCE2B42S21S	TM8E120C20MP11	21.00	CF/CM42C	1300.00	40.00	29.00	15.00	12.50
TCE2B42S21S	TM8E120C20MP11	21.00	CF/CM48C	1300.00	40.50	29.60	15.00	12.50
TCE2B42S21S	TM8E120C20MP11	24.50	CF/CM48D	1325.00	40.50	29.60	15.00	12.50

Table 12: Furnace capacity - 3.5 ton

Outdoor unit model	Furnace model	Furnace width (in.)	Indoor coil model	Rated CFM	Net cool (MBH)	Sens cool (MBH)	SEER2	EER2
TCE2B42S21S	TM8E120C20MP11	21.00	XAF/XAUC42E	1250.00	40.00	28.80	15.25	12.75
TCE2B42S21S	TM8E120C20MP11	21.00	XAF/XAUC48F	1275.00	40.00	28.80	15.00	12.50
TCE2B42S21S	TM8E120C20MP11	24.50	XAFD42E	1275.00	40.50	29.40	15.25	12.75
TCE2B42S21S	TM8E120C20MP11	24.50	XAFD48F	1275.00	40.00	28.80	15.25	12.75
TCE2B42S21S	TM8E120C20MP11	21.00	XAHC42E	1225.00	40.00	28.80	15.00	12.50
TCE2B42S21S	TM8E120C20MP11	21.00	XAHC48F	1275.00	40.00	28.80	15.25	12.75
TCE2B42S21S	TM8E120C20MP11	24.50	XAHD42E	1250.00	40.00	29.00	15.00	12.50
TCE2B42S21S	TM8E120C20MP11	24.50	XAHD48F	1275.00	40.00	28.80	15.25	12.75
TCE2B42S21S	TM8E130D20MP11	24.50	CF/CM48D	1300.00	40.50	29.40	15.25	12.75
TCE2B42S21S	TM8E130D20MP11	24.50	XAFD42E	1250.00	40.00	28.80	15.25	12.75
TCE2B42S21S	TM8E130D20MP11	24.50	XAFD48F	1250.00	40.00	28.60	15.25	12.75
TCE2B42S21S	TM8E130D20MP11	24.50	XAHD42E	1225.00	40.00	28.60	15.25	12.75
TCE2B42S21S	TM8E130D20MP11	24.50	XAHD48F	1250.00	40.00	28.60	15.25	12.75
TCE2B42S21S	TM8V080C16MP12C	21.00	CF/CM42C	1200.00	39.50	28.00	14.75	12.50
TCE2B42S21S	TM8V080C16MP12C	21.00	CF/CM48C	1200.00	39.50	28.20	14.75	12.50
TCE2B42S21S	TM8V080C16MP12C	24.50	CF/CM48D	1200.00	39.50	28.00	14.75	12.50
TCE2B42S21S	TM8V080C16MP12C	21.00	XAF/XAUC42E	1200.00	40.00	28.60	14.75	12.50
TCE2B42S21S	TM8V080C16MP12C	21.00	XAF/XAUC48F	1200.00	39.50	28.00	14.75	12.50
TCE2B42S21S	TM8V080C16MP12C	24.50	XAFD42E	1200.00	40.00	28.60	15.00	12.50
TCE2B42S21S	TM8V080C16MP12C	24.50	XAFD48F	1200.00	39.50	28.00	15.00	12.50
TCE2B42S21S	TM8V080C16MP12C	21.00	XAHC42E	1200.00	39.50	28.20	14.75	12.50
TCE2B42S21S	TM8V080C16MP12C	21.00	XAHC48F	1200.00	39.50	28.00	15.00	12.50
TCE2B42S21S	TM8V080C16MP12C	24.50	XAHD42E	1200.00	40.00	28.60	14.75	12.50
TCE2B42S21S	TM8V080C16MP12C	24.50	XAHD48F	1200.00	39.50	28.00	15.00	12.50
TCE2B42S21S	TM8V100C16MP12C	21.00	CF/CM42C	1200.00	39.50	28.00	14.75	12.50
TCE2B42S21S	TM8V100C16MP12C	21.00	CF/CM48C	1200.00	39.50	28.20	14.75	12.50
TCE2B42S21S	TM8V100C16MP12C	24.50	CF/CM48D	1200.00	39.50	28.00	14.75	12.50
TCE2B42S21S	TM8V100C16MP12C	21.00	XAF/XAUC42E	1200.00	40.00	28.60	14.75	12.50
TCE2B42S21S	TM8V100C16MP12C	21.00	XAF/XAUC48F	1200.00	39.50	28.00	14.75	12.50
TCE2B42S21S	TM8V100C16MP12C	24.50	XAFD42E	1200.00	40.00	28.60	15.00	12.50
TCE2B42S21S	TM8V100C16MP12C	24.50	XAFD48F	1200.00	39.50	28.00	15.00	12.50
TCE2B42S21S	TM8V100C16MP12C	21.00	XAHC42E	1200.00	39.50	28.20	14.75	12.50
TCE2B42S21S	TM8V100C16MP12C	21.00	XAHC48F	1200.00	39.50	28.00	15.00	12.50
TCE2B42S21S	TM8V100C16MP12C	24.50	XAHD42E	1200.00	40.00	28.60	14.75	12.50
TCE2B42S21S	TM8V100C16MP12C	24.50	XAHD48F	1200.00	39.50	28.00	15.00	12.50
TCE2B42S21S	TM8V100C20MP12C	21.00	CF/CM42C	1275.00	39.50	28.40	15.00	12.50
TCE2B42S21S	TM8V100C20MP12C	21.00	CF/CM48C	1275.00	39.50	28.60	15.00	12.50
TCE2B42S21S	TM8V100C20MP12C	24.50	CF/CM48D	1200.00	40.00	28.40	15.25	12.75
TCE2B42S21S	TM8V100C20MP12C	21.00	XAF/XAUC42E	1225.00	40.00	28.80	15.00	12.50
TCE2B42S21S	TM8V100C20MP12C	21.00	XAF/XAUC48F	1250.00	40.00	28.60	15.00	12.50
TCE2B42S21S	TM8V100C20MP12C	24.50	XAFD42E	1250.00	40.00	29.00	15.00	12.50
TCE2B42S21S	TM8V100C20MP12C	24.50	XAFD48F	1250.00	40.00	28.60	15.00	12.50
TCE2B42S21S	TM8V100C20MP12C	21.00	XAHC42E	1225.00	40.00	28.80	14.75	12.50
TCE2B42S21S	TM8V100C20MP12C	21.00	XAHC48F	1250.00	40.00	28.60	15.00	12.50
TCE2B42S21S	TM8V100C20MP12C	24.50	XAHD42E	1225.00	40.00	28.80	15.00	12.50
TCE2B42S21S	TM8V100C20MP12C	24.50	XAHD48F	1250.00	40.00	28.60	15.00	12.50
TCE2B42S21S	TM8V120C20MP12C	21.00	CF/CM42C	1275.00	39.50	28.40	15.00	12.50
TCE2B42S21S	TM8V120C20MP12C	21.00	CF/CM48C	1275.00	39.50	28.60	15.00	12.50
TCE2B42S21S	TM8V120C20MP12C	24.50	CF/CM48D	1200.00	40.00	28.40	15.25	12.75
TCE2B42S21S	TM8V120C20MP12C	21.00	XAF/XAUC42E	1225.00	40.00	28.80	15.00	12.50
TCE2B42S21S	TM8V120C20MP12C	21.00	XAF/XAUC48F	1250.00	40.00	28.60	15.00	12.50
TCE2B42S21S	TM8V120C20MP12C	24.50	XAFD42E	1250.00	40.00	29.00	15.00	12.50
TCE2B42S21S	TM8V120C20MP12C	24.50	XAFD48F	1250.00	40.00	28.60	15.00	12.50
TCE2B42S21S	TM8V120C20MP12C	21.00	XAHC42E	1225.00	40.00	28.80	14.75	12.50
TCE2B42S21S	TM8V120C20MP12C	21.00	XAHC48F	1250.00	40.00	28.60	15.00	12.50
TCE2B42S21S	TM8V120C20MP12C	24.50	XAHD42E	1225.00	40.00	28.80	15.00	12.50
TCE2B42S21S	TM8V120C20MP12C	24.50	XAHD48F	1250.00	40.00	28.60	15.00	12.50
TCE2B42S21S	TM8Y080C16MP11	21.00	XAF/XAUC42E	1200.00	40.00	28.60	15.00	12.50
TCE2B42S21S	TM8Y080C16MP11	21.00	XAF/XAUC48F	1225.00	40.00	28.60	15.00	12.50
TCE2B42S21S	TM8Y080C16MP11	24.50	XAFD42E	1225.00	40.00	28.60	15.00	12.50
TCE2B42S21S	TM8Y080C16MP11	24.50	XAFD48F	1225.00	40.00	28.60	15.00	12.50
TCE2B42S21S	TM8Y080C16MP11	21.00	XAHC42E	1350.00	40.00	29.80	14.50	12.25
TCE2B42S21S	TM8Y080C16MP11	24.50	XAHD42E	1200.00	40.00	28.60	15.00	12.50

Table 12: Furnace capacity - 3.5 ton

Outdoor unit model	Furnace model	Furnace width (in.)	Indoor coil model	Rated CFM	Net cool (MBH)	Sens cool (MBH)	SEER2	EER2
TCE2B42S21S	TM8Y080C16MP11	24.50	XAHD48F	1225.00	40.00	28.60	15.00	12.50
TCE2B42S21S	TM8Y100C16MP11	21.00	XAF/XAUC42E	1200.00	40.00	28.60	15.00	12.50
TCE2B42S21S	TM8Y100C16MP11	21.00	XAF/XAUC48F	1225.00	40.00	28.60	15.00	12.50
TCE2B42S21S	TM8Y100C16MP11	24.50	XAFD42E	1225.00	40.00	28.60	15.00	12.50
TCE2B42S21S	TM8Y100C16MP11	24.50	XAFD48F	1225.00	40.00	28.60	15.00	12.50
TCE2B42S21S	TM8Y100C16MP11	21.00	XAHC42E	1350.00	40.00	29.80	14.50	12.25
TCE2B42S21S	TM8Y100C16MP11	24.50	XAHD42E	1200.00	40.00	28.60	15.00	12.50
TCE2B42S21S	TM8Y100C16MP11	24.50	XAHD48F	1225.00	40.00	28.60	15.00	12.50
TCE2B42S21S	TM8Y100C20MP11	21.00	CF/CM42C	1225.00	40.00	28.40	15.00	12.50
TCE2B42S21S	TM8Y100C20MP11	21.00	CF/CM48C	1225.00	40.00	28.60	15.25	12.75
TCE2B42S21S	TM8Y100C20MP11	24.50	CF/CM48D	1250.00	40.00	28.80	15.25	12.75
TCE2B42S21S	TM8Y100C20MP11	21.00	XAF/XAUC42E	1375.00	40.50	30.20	14.75	12.50
TCE2B42S21S	TM8Y100C20MP11	21.00	XAF/XAUC48F	1200.00	40.00	28.20	15.25	12.75
TCE2B42S21S	TM8Y100C20MP11	24.50	XAFD42E	1200.00	40.00	28.40	15.25	12.75
TCE2B42S21S	TM8Y100C20MP11	24.50	XAFD48F	1200.00	40.00	28.20	15.25	12.75
TCE2B42S21S	TM8Y100C20MP11	21.00	XAHC42E	1325.00	40.50	30.00	14.75	12.50
TCE2B42S21S	TM8Y100C20MP11	24.50	XAHD42E	1350.00	40.50	30.20	14.75	12.50
TCE2B42S21S	TM8Y100C20MP11	24.50	XAHD48F	1200.00	40.00	28.20	15.25	12.75
TCE2B42S21S	TM8Y120C20MP11	21.00	CF/CM42C	1225.00	40.00	28.40	15.00	12.50
TCE2B42S21S	TM8Y120C20MP11	21.00	CF/CM48C	1225.00	40.00	28.60	15.25	12.75
TCE2B42S21S	TM8Y120C20MP11	24.50	CF/CM48D	1250.00	40.00	28.80	15.25	12.75
TCE2B42S21S	TM8Y120C20MP11	21.00	XAF/XAUC42E	1375.00	40.50	30.20	14.75	12.50
TCE2B42S21S	TM8Y120C20MP11	21.00	XAF/XAUC48F	1200.00	40.00	28.20	15.25	12.75
TCE2B42S21S	TM8Y120C20MP11	24.50	XAFD42E	1200.00	40.00	28.40	15.25	12.75
TCE2B42S21S	TM8Y120C20MP11	24.50	XAFD48F	1200.00	40.00	28.20	15.25	12.75
TCE2B42S21S	TM8Y120C20MP11	21.00	XAHC42E	1325.00	40.50	30.00	14.75	12.50
TCE2B42S21S	TM8Y120C20MP11	24.50	XAHD42E	1350.00	40.50	30.20	14.75	12.50
TCE2B42S21S	TM8Y120C20MP11	24.50	XAHD48F	1200.00	40.00	28.20	15.25	12.75
TCE2B42S21S	TM9E080B12MP12	21.00	CF/CM42C	1225.00	39.50	28.40	14.30	11.75
TCE2B42S21S	TM9E080B12MP12	21.00	CF/CM48C	1250.00	39.50	28.80	14.30	11.75
TCE2B42S21S	TM9E080B12MP12	21.00	XAF/XAUC42E	1200.00	39.50	28.40	14.30	11.75
TCE2B42S21S	TM9E080B12MP12	21.00	XAF/XAUC48F	1225.00	39.50	28.40	14.30	12.00
TCE2B42S21S	TM9E080B12MP12	21.00	XAHC42E	1200.00	39.50	28.40	14.30	11.75
TCE2B42S21S	TM9E080B12MP12	21.00	XAHC48F	1225.00	39.50	28.40	14.30	12.00
TCE2B42S21S	TM9E080C16MP12	21.00	CF/CM42C	1450.00	40.00	30.40	14.30	12.00
TCE2B42S21S	TM9E080C16MP12	21.00	CF/CM48C	1450.00	40.00	30.60	14.30	12.00
TCE2B42S21S	TM9E080C16MP12	24.50	CF/CM48D	1475.00	40.00	30.80	14.30	12.00
TCE2B42S21S	TM9E080C16MP12	21.00	XAF/XAUC42E	1400.00	40.50	30.60	14.50	12.25
TCE2B42S21S	TM9E080C16MP12	21.00	XAF/XAUC48F	1425.00	40.50	30.40	14.50	12.25
TCE2B42S21S	TM9E080C16MP12	24.50	XAFD42E	1425.00	40.50	30.80	14.50	12.25
TCE2B42S21S	TM9E080C16MP12	24.50	XAFD48F	1425.00	40.50	30.40	14.30	12.00
TCE2B42S21S	TM9E080C16MP12	21.00	XAHC42E	1350.00	40.50	30.20	14.75	12.50
TCE2B42S21S	TM9E080C16MP12	21.00	XAHC48F	1425.00	40.50	30.40	14.50	12.25
TCE2B42S21S	TM9E080C16MP12	24.50	XAHD42E	1375.00	40.50	30.40	14.50	12.25
TCE2B42S21S	TM9E080C16MP12	24.50	XAHD48F	1425.00	40.50	30.40	14.50	12.25
TCE2B42S21S	TM9E080C20MP12	21.00	CF/CM42C	1275.00	39.50	28.40	15.00	12.50
TCE2B42S21S	TM9E080C20MP12	21.00	CF/CM48C	1275.00	39.50	28.60	15.00	12.50
TCE2B42S21S	TM9E080C20MP12	24.50	CF/CM48D	1300.00	40.50	29.60	15.00	12.50
TCE2B42S21S	TM9E080C20MP12	21.00	XAF/XAUC42E	1225.00	40.00	28.80	15.00	12.50
TCE2B42S21S	TM9E080C20MP12	21.00	XAF/XAUC48F	1250.00	40.00	28.60	15.00	12.50
TCE2B42S21S	TM9E080C20MP12	24.50	XAFD42E	1250.00	40.00	28.80	15.25	12.75
TCE2B42S21S	TM9E080C20MP12	24.50	XAFD48F	1275.00	40.00	28.80	15.25	12.75
TCE2B42S21S	TM9E080C20MP12	21.00	XAHC42E	1600.00	41.50	32.40	15.50	12.75
TCE2B42S21S	TM9E080C20MP12	21.00	XAHC48F	1250.00	40.00	28.60	15.25	12.75
TCE2B42S21S	TM9E080C20MP12	24.50	XAHD42E	1225.00	40.00	28.80	15.00	12.50
TCE2B42S21S	TM9E080C20MP12	24.50	XAHD48F	1250.00	40.00	28.60	15.00	12.50
TCE2B42S21S	TM9E100C16MP12	21.00	CF/CM42C	1500.00	40.00	31.00	14.30	11.75
TCE2B42S21S	TM9E100C16MP12	21.00	CF/CM48C	1500.00	40.00	31.00	14.30	11.75
TCE2B42S21S	TM9E100C16MP12	24.50	CF/CM48D	1525.00	40.00	31.20	14.30	11.75
TCE2B42S21S	TM9E100C16MP12	21.00	XAF/XAUC48F	1475.00	40.00	30.60	14.30	11.75
TCE2B42S21S	TM9E100C16MP12	24.50	XAFD42E	1475.00	40.00	31.00	14.30	11.75
TCE2B42S21S	TM9E100C16MP12	24.50	XAFD48F	1500.00	40.00	30.80	14.30	11.75
TCE2B42S21S	TM9E100C16MP12	21.00	XAHC48F	1475.00	40.00	30.60	14.30	11.75

Table 12: Furnace capacity - 3.5 ton

Outdoor unit model	Furnace model	Furnace width (in.)	Indoor coil model	Rated CFM	Net cool (MBH)	Sens cool (MBH)	SEER2	EER2
TCE2B42S21S	TM9E100C16MP12	24.50	XAHD48F	1475.00	40.00	30.60	14.30	11.75
TCE2B42S21S	TM9E100C20MP12	21.00	CF/CM42C	1250.00	39.50	28.40	15.00	12.50
TCE2B42S21S	TM9E100C20MP12	21.00	CF/CM48C	1275.00	40.50	29.40	15.00	12.50
TCE2B42S21S	TM9E100C20MP12	24.50	CF/CM48D	1275.00	40.50	29.40	15.00	12.50
TCE2B42S21S	TM9E100C20MP12	21.00	XAF/XAUC42E	1225.00	40.00	28.60	15.25	12.75
TCE2B42S21S	TM9E100C20MP12	21.00	XAF/XAUC48F	1225.00	40.00	28.40	15.00	12.50
TCE2B42S21S	TM9E100C20MP12	24.50	XAFD42E	1225.00	40.00	28.60	15.25	12.75
TCE2B42S21S	TM9E100C20MP12	24.50	XAFD48F	1250.00	40.00	28.60	15.25	12.75
TCE2B42S21S	TM9E100C20MP12	21.00	XAHC42E	1575.00	41.50	32.20	15.50	12.75
TCE2B42S21S	TM9E100C20MP12	21.00	XAHC48F	1250.00	40.00	28.60	15.25	12.75
TCE2B42S21S	TM9E100C20MP12	24.50	XAHD42E	1200.00	40.00	28.60	15.00	12.50
TCE2B42S21S	TM9E100C20MP12	24.50	XAHD48F	1250.00	40.00	28.60	15.25	12.75
TCE2B42S21S	TM9E120D20MP12	24.50	CF/CM48D	1325.00	40.00	29.40	15.00	12.50
TCE2B42S21S	TM9E120D20MP12	24.50	XAFD42E	1275.00	40.50	29.40	15.00	12.50
TCE2B42S21S	TM9E120D20MP12	24.50	XAFD48F	1300.00	40.00	29.00	15.00	12.50
TCE2B42S21S	TM9E120D20MP12	24.50	XAHD42E	1250.00	40.00	29.00	15.00	12.50
TCE2B42S21S	TM9E120D20MP12	24.50	XAHD48F	1275.00	40.00	28.80	15.00	12.50
TCE2B42S21S	TM9V080B12MP12C	21.00	CF/CM42C	1200.00	39.50	28.20	14.30	11.75
TCE2B42S21S	TM9V080B12MP12C	21.00	CF/CM48C	1200.00	39.50	28.40	14.30	11.75
TCE2B42S21S	TM9V080B12MP12C	21.00	XAF/XAUC42E	1200.00	39.50	28.40	14.30	11.75
TCE2B42S21S	TM9V080B12MP12C	21.00	XAF/XAUC48F	1200.00	39.50	28.20	14.30	11.75
TCE2B42S21S	TM9V080B12MP12C	21.00	XAHC48F	1200.00	39.50	28.20	14.30	12.00
TCE2B42S21S	TM9V080C16MP12C	21.00	CF/CM42C	1225.00	39.50	28.40	14.50	12.25
TCE2B42S21S	TM9V080C16MP12C	21.00	CF/CM48C	1225.00	39.50	28.40	14.50	12.25
TCE2B42S21S	TM9V080C16MP12C	24.50	CF/CM48D	1225.00	39.50	28.40	14.50	12.25
TCE2B42S21S	TM9V080C16MP12C	21.00	XAF/XAUC42E	1225.00	40.00	29.00	14.50	12.25
TCE2B42S21S	TM9V080C16MP12C	21.00	XAF/XAUC48F	1225.00	39.50	28.40	14.50	12.25
TCE2B42S21S	TM9V080C16MP12C	24.50	XAFD42E	1225.00	40.00	28.80	14.50	12.25
TCE2B42S21S	TM9V080C16MP12C	24.50	XAFD48F	1225.00	39.50	28.40	14.50	12.25
TCE2B42S21S	TM9V080C16MP12C	21.00	XAHC42E	1225.00	39.50	28.60	14.30	12.00
TCE2B42S21S	TM9V080C16MP12C	21.00	XAHC48F	1225.00	39.50	28.40	14.50	12.25
TCE2B42S21S	TM9V080C16MP12C	24.50	XAHD42E	1225.00	39.50	28.60	14.50	12.25
TCE2B42S21S	TM9V080C16MP12C	24.50	XAHD48F	1225.00	39.50	28.40	14.50	12.25
TCE2B42S21S	TM9V100C16MP12C	21.00	CF/CM42C	1200.00	39.50	28.00	14.75	12.50
TCE2B42S21S	TM9V100C16MP12C	21.00	CF/CM48C	1200.00	39.50	28.00	15.00	12.50
TCE2B42S21S	TM9V100C16MP12C	24.50	CF/CM48D	1200.00	39.50	28.00	15.00	12.50
TCE2B42S21S	TM9V100C16MP12C	21.00	XAF/XAUC42E	1200.00	40.00	28.60	15.00	12.50
TCE2B42S21S	TM9V100C16MP12C	21.00	XAF/XAUC48F	1200.00	39.50	28.00	15.00	12.50
TCE2B42S21S	TM9V100C16MP12C	24.50	XAFD42E	1200.00	40.00	28.60	15.00	12.50
TCE2B42S21S	TM9V100C16MP12C	24.50	XAFD48F	1200.00	39.50	28.00	15.00	12.50
TCE2B42S21S	TM9V100C16MP12C	21.00	XAHC42E	1200.00	40.00	28.60	14.75	12.50
TCE2B42S21S	TM9V100C16MP12C	21.00	XAHC48F	1200.00	39.50	28.00	15.00	12.50
TCE2B42S21S	TM9V100C16MP12C	24.50	XAHD42E	1200.00	40.00	28.60	14.75	12.50
TCE2B42S21S	TM9V100C16MP12C	24.50	XAHD48F	1200.00	39.50	28.00	15.00	12.50
TCE2B42S21S	TM9V100C20MP12C	21.00	CF/CM42C	1250.00	39.50	28.40	14.75	12.50
TCE2B42S21S	TM9V100C20MP12C	21.00	CF/CM48C	1250.00	39.50	28.40	14.75	12.50
TCE2B42S21S	TM9V100C20MP12C	24.50	CF/CM48D	1225.00	39.50	28.40	14.75	12.50
TCE2B42S21S	TM9V100C20MP12C	21.00	XAF/XAUC42E	1250.00	40.00	29.00	14.75	12.50
TCE2B42S21S	TM9V100C20MP12C	21.00	XAF/XAUC48F	1250.00	40.00	28.80	14.75	12.50
TCE2B42S21S	TM9V100C20MP12C	24.50	XAFD42E	1250.00	40.00	29.00	15.00	12.50
TCE2B42S21S	TM9V100C20MP12C	24.50	XAFD48F	1250.00	40.00	28.80	15.00	12.50
TCE2B42S21S	TM9V100C20MP12C	21.00	XAHC42E	1250.00	40.00	29.00	14.75	12.50
TCE2B42S21S	TM9V100C20MP12C	21.00	XAHC48F	1250.00	40.00	28.80	15.00	12.50
TCE2B42S21S	TM9V100C20MP12C	24.50	XAHD42E	1250.00	40.00	29.00	14.75	12.50
TCE2B42S21S	TM9V100C20MP12C	24.50	XAHD48F	1250.00	40.00	28.80	14.75	12.50
TCE2B42S21S	TM9V120D20MP12C	24.50	CF/CM48D	1200.00	40.00	28.40	15.25	12.75
TCE2B42S21S	TM9V120D20MP12C	24.50	XAFD42E	1200.00	40.00	28.40	15.25	12.75
TCE2B42S21S	TM9V120D20MP12C	24.50	XAFD48F	1200.00	40.00	28.20	15.25	12.75
TCE2B42S21S	TM9V120D20MP12C	24.50	XAHD42E	1200.00	40.00	28.60	15.00	12.50
TCE2B42S21S	TM9V120D20MP12C	24.50	XAHD48F	1200.00	40.00	28.20	15.25	12.75
TCE2B42S21S	TM9Y080B12MP11	21.00	CF/CM42C	1225.00	39.50	28.40	14.30	11.75
TCE2B42S21S	TM9Y080B12MP11	21.00	CF/CM48C	1225.00	39.50	28.60	14.30	11.75
TCE2B42S21S	TM9Y080B12MP11	21.00	XAF/XAUC48F	1200.00	39.50	28.20	14.30	11.75

Table 12: Furnace capacity - 3.5 ton

Outdoor unit model	Furnace model	Furnace width (in.)	Indoor coil model	Rated CFM	Net cool (MBH)	Sens cool (MBH)	SEER2	EER2
TCE2B42S21S	TM9Y080B12MP11	21.00	XAHC48F	1200.00	39.50	28.20	14.30	11.75
TCE2B42S21S	TM9Y080C16MP11	21.00	CF/CM42C	1275.00	39.50	28.80	14.30	12.00
TCE2B42S21S	TM9Y080C16MP11	21.00	CF/CM48C	1275.00	39.50	28.80	14.30	12.00
TCE2B42S21S	TM9Y080C16MP11	24.50	CF/CM48D	1300.00	40.00	29.40	14.50	12.25
TCE2B42S21S	TM9Y080C16MP11	21.00	XAF/XAUC42E	1250.00	40.00	29.20	14.50	12.25
TCE2B42S21S	TM9Y080C16MP11	21.00	XAF/XAUC48F	1250.00	39.50	28.60	14.50	12.25
TCE2B42S21S	TM9Y080C16MP11	24.50	XAFD42E	1250.00	40.00	29.00	14.50	12.25
TCE2B42S21S	TM9Y080C16MP11	24.50	XAFD48F	1275.00	40.00	29.00	14.50	12.25
TCE2B42S21S	TM9Y080C16MP11	21.00	XAHC42E	1225.00	39.50	28.60	14.50	12.25
TCE2B42S21S	TM9Y080C16MP11	21.00	XAHC48F	1275.00	40.00	29.00	14.50	12.25
TCE2B42S21S	TM9Y080C16MP11	24.50	XAHD42E	1250.00	40.00	29.20	14.50	12.25
TCE2B42S21S	TM9Y080C16MP11	24.50	XAHD48F	1275.00	40.00	29.00	14.50	12.25
TCE2B42S21S	TM9Y100C16MP11	21.00	CF/CM42C	1275.00	39.50	28.80	14.30	12.00
TCE2B42S21S	TM9Y100C16MP11	21.00	CF/CM48C	1300.00	40.00	29.40	14.50	12.25
TCE2B42S21S	TM9Y100C16MP11	24.50	CF/CM48D	1300.00	40.00	29.40	14.50	12.25
TCE2B42S21S	TM9Y100C16MP11	21.00	XAF/XAUC42E	1250.00	40.00	29.20	14.50	12.25
TCE2B42S21S	TM9Y100C16MP11	21.00	XAF/XAUC48F	1250.00	39.50	28.60	14.50	12.25
TCE2B42S21S	TM9Y100C16MP11	24.50	XAFD42E	1250.00	40.00	29.20	14.50	12.25
TCE2B42S21S	TM9Y100C16MP11	24.50	XAFD48F	1275.00	40.00	29.00	14.50	12.25
TCE2B42S21S	TM9Y100C16MP11	21.00	XAHC42E	1225.00	39.50	28.60	14.30	12.00
TCE2B42S21S	TM9Y100C16MP11	21.00	XAHC48F	1275.00	40.00	29.00	14.50	12.25
TCE2B42S21S	TM9Y100C16MP11	24.50	XAHD42E	1250.00	40.00	29.20	14.50	12.25
TCE2B42S21S	TM9Y100C16MP11	24.50	XAHD48F	1275.00	40.00	29.00	14.50	12.25
TCE2B42S21S	TM9Y100C20MP11	21.00	CF/CM42C	1200.00	39.50	28.00	14.75	12.50
TCE2B42S21S	TM9Y100C20MP11	21.00	CF/CM48C	1200.00	39.50	28.20	14.75	12.50
TCE2B42S21S	TM9Y100C20MP11	24.50	CF/CM48D	1225.00	39.50	28.20	14.75	12.50
TCE2B42S21S	TM9Y100C20MP11	21.00	XAF/XAUC42E	1350.00	40.00	30.00	14.50	12.25
TCE2B42S21S	TM9Y100C20MP11	21.00	XAF/XAUC48F	1375.00	40.00	29.80	14.50	12.25
TCE2B42S21S	TM9Y100C20MP11	24.50	XAFD42E	1375.00	40.50	30.40	14.50	12.25
TCE2B42S21S	TM9Y100C20MP11	24.50	XAFD48F	1400.00	40.50	30.20	14.50	12.25
TCE2B42S21S	TM9Y100C20MP11	21.00	XAHC42E	1325.00	40.00	29.80	14.30	12.00
TCE2B42S21S	TM9Y100C20MP11	21.00	XAHC48F	1375.00	40.00	29.80	14.50	12.25
TCE2B42S21S	TM9Y100C20MP11	24.50	XAHD42E	1350.00	40.00	30.00	14.50	12.25
TCE2B42S21S	TM9Y100C20MP11	24.50	XAHD48F	1375.00	40.00	29.80	14.50	12.25
TCE2B42S21S	TM9Y120D20MP11	24.50	CF/CM48D	1275.00	40.00	29.00	15.00	12.50
TCE2B42S21S	TM9Y120D20MP11	24.50	XAFD42E	1225.00	40.00	28.60	15.25	12.75
TCE2B42S21S	TM9Y120D20MP11	24.50	XAFD48F	1225.00	40.00	28.40	15.00	12.50
TCE2B42S21S	TM9Y120D20MP11	24.50	XAHD42E	1200.00	40.00	28.60	15.00	12.50
TCE2B42S21S	TM9Y120D20MP11	24.50	XAHD48F	1225.00	40.00	28.40	15.00	12.50
TCE2B42S21S	TMLE080B12MP11	21.00	CF/CM42C	1250.00	39.50	28.60	14.30	11.75
TCE2B42S21S	TMLE080B12MP11	21.00	CF/CM48C	1250.00	39.50	28.80	14.30	11.75
TCE2B42S21S	TMLE080B12MP11	21.00	XAF/XAUC42E	1225.00	39.50	28.60	14.30	11.75
TCE2B42S21S	TMLE080B12MP11	21.00	XAF/XAUC48F	1225.00	39.50	28.40	14.30	11.75
TCE2B42S21S	TMLE080B12MP11	21.00	XAHC42E	1200.00	39.50	28.40	14.30	11.75
TCE2B42S21S	TMLE080B12MP11	21.00	XAHC48F	1225.00	39.50	28.40	14.30	11.75
TCE2B42S21S	TMLE080C16MP11	21.00	CF/CM42C	1475.00	40.00	30.60	14.30	12.00
TCE2B42S21S	TMLE080C16MP11	21.00	CF/CM48C	1475.00	40.00	30.80	14.30	12.00
TCE2B42S21S	TMLE080C16MP11	24.50	CF/CM48D	1500.00	40.50	31.20	14.50	12.00
TCE2B42S21S	TMLE080C16MP11	21.00	XAF/XAUC42E	1425.00	40.50	31.00	14.30	12.00
TCE2B42S21S	TMLE080C16MP11	21.00	XAF/XAUC48F	1450.00	40.50	30.60	14.30	12.00
TCE2B42S21S	TMLE080C16MP11	24.50	XAFD42E	1450.00	40.50	31.00	14.30	12.00
TCE2B42S21S	TMLE080C16MP11	24.50	XAFD48F	1475.00	40.50	30.80	14.30	12.00
TCE2B42S21S	TMLE080C16MP11	21.00	XAHC42E	1400.00	40.50	30.80	14.30	11.75
TCE2B42S21S	TMLE080C16MP11	21.00	XAHC48F	1450.00	40.50	30.60	14.30	12.00
TCE2B42S21S	TMLE080C16MP11	24.50	XAHD42E	1425.00	40.50	31.00	14.30	12.00
TCE2B42S21S	TMLE080C16MP11	24.50	XAHD48F	1450.00	40.50	30.60	14.30	12.00
TCE2B42S21S	TMLE080C20MP11	21.00	CF/CM42C	1325.00	40.00	29.20	15.00	12.50
TCE2B42S21S	TMLE080C20MP11	21.00	CF/CM48C	1325.00	40.00	29.40	15.00	12.50
TCE2B42S21S	TMLE080C20MP11	24.50	CF/CM48D	1325.00	40.50	29.80	15.00	12.50
TCE2B42S21S	TMLE080C20MP11	21.00	XAF/XAUC42E	1275.00	40.50	29.40	15.00	12.50
TCE2B42S21S	TMLE080C20MP11	21.00	XAF/XAUC48F	1275.00	40.00	28.80	15.00	12.50
TCE2B42S21S	TMLE080C20MP11	24.50	XAFD42E	1275.00	40.50	29.40	15.25	12.75
TCE2B42S21S	TMLE080C20MP11	24.50	XAFD48F	1300.00	40.00	29.00	15.00	12.50

Table 12: Furnace capacity - 3.5 ton

Outdoor unit model	Furnace model	Furnace width (in.)	Indoor coil model	Rated CFM	Net cool (MBH)	Sens cool (MBH)	SEER2	EER2
TCE2B42S21S	TMLE080C20MP11	21.00	XAHC42E	1250.00	40.00	29.00	15.00	12.50
TCE2B42S21S	TMLE080C20MP11	21.00	XAHC48F	1300.00	40.00	29.00	15.00	12.50
TCE2B42S21S	TMLE080C20MP11	24.50	XAHD42E	1250.00	40.00	29.00	15.00	12.50
TCE2B42S21S	TMLE080C20MP11	24.50	XAHD48F	1300.00	40.00	29.00	15.00	12.50
TCE2B42S21S	TMLE100C16MP11	21.00	CF/CM42C	1475.00	40.00	30.60	14.30	12.00
TCE2B42S21S	TMLE100C16MP11	21.00	CF/CM48C	1475.00	40.00	30.80	14.30	12.00
TCE2B42S21S	TMLE100C16MP11	24.50	CF/CM48D	1500.00	40.50	31.20	14.50	12.25
TCE2B42S21S	TMLE100C16MP11	21.00	XAF/XAUC42E	1425.00	40.50	31.00	14.30	12.00
TCE2B42S21S	TMLE100C16MP11	21.00	XAF/XAUC48F	1450.00	40.50	30.60	14.30	12.00
TCE2B42S21S	TMLE100C16MP11	24.50	XAFD42E	1450.00	40.50	31.00	14.50	12.25
TCE2B42S21S	TMLE100C16MP11	24.50	XAFD48F	1450.00	40.50	30.60	14.30	12.00
TCE2B42S21S	TMLE100C16MP11	21.00	XAHC42E	1400.00	40.50	30.80	14.30	11.75
TCE2B42S21S	TMLE100C16MP11	21.00	XAHC48F	1450.00	40.50	30.60	14.30	12.00
TCE2B42S21S	TMLE100C16MP11	24.50	XAHD42E	1425.00	40.50	31.00	14.30	12.00
TCE2B42S21S	TMLE100C16MP11	24.50	XAHD48F	1450.00	40.50	30.60	14.30	12.00
TCE2B42S21S	TMLE100C20MP11	21.00	CF/CM42C	1300.00	40.00	29.00	15.00	12.50
TCE2B42S21S	TMLE100C20MP11	21.00	CF/CM48C	1300.00	40.00	29.20	15.00	12.50
TCE2B42S21S	TMLE100C20MP11	24.50	CF/CM48D	1325.00	40.50	29.60	15.00	12.50
TCE2B42S21S	TMLE100C20MP11	21.00	XAF/XAUC42E	1250.00	40.00	29.00	15.00	12.50
TCE2B42S21S	TMLE100C20MP11	21.00	XAF/XAUC48F	1275.00	40.00	28.80	15.00	12.50
TCE2B42S21S	TMLE100C20MP11	24.50	XAFD42E	1275.00	40.50	29.40	15.25	12.75
TCE2B42S21S	TMLE100C20MP11	24.50	XAFD48F	1300.00	40.00	29.00	15.25	12.75
TCE2B42S21S	TMLE100C20MP11	21.00	XAHC42E	1250.00	40.00	29.00	15.00	12.50
TCE2B42S21S	TMLE100C20MP11	21.00	XAHC48F	1275.00	40.00	28.80	15.00	12.50
TCE2B42S21S	TMLE100C20MP11	24.50	XAHD42E	1250.00	40.00	29.00	15.00	12.50
TCE2B42S21S	TMLE100C20MP11	24.50	XAHD48F	1275.00	40.00	28.80	15.00	12.50
TCE2B42S21S	TMLE120C16MP11	21.00	CF/CM42C	1475.00	40.00	30.60	14.30	12.00
TCE2B42S21S	TMLE120C16MP11	21.00	CF/CM48C	1475.00	40.00	30.80	14.30	12.00
TCE2B42S21S	TMLE120C16MP11	24.50	CF/CM48D	1500.00	40.50	31.20	14.50	12.25
TCE2B42S21S	TMLE120C16MP11	21.00	XAF/XAUC42E	1450.00	40.50	31.00	14.30	12.00
TCE2B42S21S	TMLE120C16MP11	21.00	XAF/XAUC48F	1450.00	40.50	30.60	14.30	12.00
TCE2B42S21S	TMLE120C16MP11	24.50	XAFD42E	1450.00	40.50	31.00	14.50	12.25
TCE2B42S21S	TMLE120C16MP11	24.50	XAFD48F	1475.00	40.50	30.80	14.50	12.25
TCE2B42S21S	TMLE120C16MP11	21.00	XAHC42E	1425.00	40.50	31.00	14.30	12.00
TCE2B42S21S	TMLE120C16MP11	21.00	XAHC48F	1450.00	40.50	30.60	14.30	12.00
TCE2B42S21S	TMLE120C16MP11	24.50	XAHD42E	1425.00	40.50	31.00	14.30	12.00
TCE2B42S21S	TMLE120C16MP11	24.50	XAHD48F	1475.00	40.50	30.80	14.50	12.25
TCE2B42S21S	TMLE120C20MP11	21.00	CF/CM42C	1300.00	40.00	29.00	15.00	12.50
TCE2B42S21S	TMLE120C20MP11	21.00	CF/CM48C	1300.00	40.50	29.60	15.00	12.50
TCE2B42S21S	TMLE120C20MP11	24.50	CF/CM48D	1325.00	40.50	29.60	15.00	12.50
TCE2B42S21S	TMLE120C20MP11	21.00	XAF/XAUC42E	1250.00	40.00	28.80	15.25	12.75
TCE2B42S21S	TMLE120C20MP11	21.00	XAF/XAUC48F	1275.00	40.00	28.80	15.00	12.50
TCE2B42S21S	TMLE120C20MP11	24.50	XAFD42E	1275.00	40.50	29.40	15.25	12.75
TCE2B42S21S	TMLE120C20MP11	24.50	XAFD48F	1275.00	40.00	28.80	15.25	12.75
TCE2B42S21S	TMLE120C20MP11	21.00	XAHC42E	1225.00	40.00	28.80	15.00	12.50
TCE2B42S21S	TMLE120C20MP11	21.00	XAHC48F	1275.00	40.00	28.80	15.25	12.75
TCE2B42S21S	TMLE120C20MP11	24.50	XAHD42E	1250.00	40.00	29.00	15.00	12.50
TCE2B42S21S	TMLE120C20MP11	24.50	XAHD48F	1275.00	40.00	28.80	15.25	12.75
TCE2B42S21S	TMLE130D20MP11	24.50	CF/CM48D	1300.00	40.50	29.40	15.25	12.75
TCE2B42S21S	TMLE130D20MP11	24.50	XAFD42E	1250.00	40.00	28.80	15.25	12.75
TCE2B42S21S	TMLE130D20MP11	24.50	XAFD48F	1250.00	40.00	28.60	15.25	12.75
TCE2B42S21S	TMLE130D20MP11	24.50	XAHD42E	1225.00	40.00	28.60	15.25	12.75
TCE2B42S21S	TMLE130D20MP11	24.50	XAHD48F	1250.00	40.00	28.60	15.25	12.75
TCE2B42S21S	TMLV100C16MP12C	21.00	CF/CM42C	1200.00	39.50	28.00	14.75	12.50
TCE2B42S21S	TMLV100C16MP12C	21.00	CF/CM48C	1200.00	39.50	28.20	14.75	12.50
TCE2B42S21S	TMLV100C16MP12C	24.50	CF/CM48D	1200.00	39.50	28.00	14.75	12.50
TCE2B42S21S	TMLV100C16MP12C	21.00	XAF/XAUC42E	1200.00	40.00	28.60	14.75	12.50
TCE2B42S21S	TMLV100C16MP12C	21.00	XAF/XAUC48F	1200.00	39.50	28.00	14.75	12.50
TCE2B42S21S	TMLV100C16MP12C	24.50	XAFD42E	1200.00	40.00	28.60	15.00	12.50
TCE2B42S21S	TMLV100C16MP12C	24.50	XAFD48F	1200.00	39.50	28.00	15.00	12.50
TCE2B42S21S	TMLV100C16MP12C	21.00	XAHC42E	1200.00	39.50	28.20	14.75	12.50
TCE2B42S21S	TMLV100C16MP12C	21.00	XAHC48F	1200.00	39.50	28.00	15.00	12.50
TCE2B42S21S	TMLV100C16MP12C	24.50	XAHD42E	1200.00	40.00	28.60	14.75	12.50

Table 12: Furnace capacity - 3.5 ton

Outdoor unit model	Furnace model	Furnace width (in.)	Indoor coil model	Rated CFM	Net cool (MBH)	Sens cool (MBH)	SEER2	EER2
TCE2B42S21S	TMLV100C16MP12C	24.50	XAHD48F	1200.00	39.50	28.00	15.00	12.50
TCE2B42S21S	TMLV120C20MP12C	21.00	CF/CM42C	1275.00	39.50	28.40	15.00	12.50
TCE2B42S21S	TMLV120C20MP12C	21.00	CF/CM48C	1275.00	39.50	28.60	15.00	12.50
TCE2B42S21S	TMLV120C20MP12C	24.50	CF/CM48D	1200.00	40.00	28.40	15.25	12.75
TCE2B42S21S	TMLV120C20MP12C	21.00	XAF/XAUC42E	1225.00	40.00	28.80	15.00	12.50
TCE2B42S21S	TMLV120C20MP12C	21.00	XAF/XAUC48F	1250.00	40.00	28.60	15.00	12.50
TCE2B42S21S	TMLV120C20MP12C	24.50	XAFD42E	1250.00	40.00	29.00	15.00	12.50
TCE2B42S21S	TMLV120C20MP12C	24.50	XAFD48F	1250.00	40.00	28.60	15.00	12.50
TCE2B42S21S	TMLV120C20MP12C	21.00	XAHC42E	1225.00	40.00	28.80	14.75	12.50
TCE2B42S21S	TMLV120C20MP12C	21.00	XAHC48F	1250.00	40.00	28.60	15.00	12.50
TCE2B42S21S	TMLV120C20MP12C	24.50	XAHD42E	1225.00	40.00	28.80	15.00	12.50
TCE2B42S21S	TMLV120C20MP12C	24.50	XAHD48F	1250.00	40.00	28.60	15.00	12.50
TCE2B42S21S	TP9C080B12MP13C	21.00	CF/CM42C	1200.00	39.50	28.20	14.30	11.75
TCE2B42S21S	TP9C080B12MP13C	21.00	CF/CM48C	1200.00	39.50	28.40	14.30	11.75
TCE2B42S21S	TP9C080B12MP13C	21.00	XAF/XAUC42E	1200.00	39.50	28.40	14.30	11.75
TCE2B42S21S	TP9C080B12MP13C	21.00	XAF/XAUC48F	1200.00	39.50	28.20	14.30	11.75
TCE2B42S21S	TP9C080B12MP13C	21.00	XAHC48F	1200.00	39.50	28.20	14.30	12.00
TCE2B42S21S	TP9C080C16MP13C	21.00	CF/CM42C	1225.00	39.50	28.40	14.50	12.25
TCE2B42S21S	TP9C080C16MP13C	21.00	CF/CM48C	1225.00	39.50	28.40	14.50	12.25
TCE2B42S21S	TP9C080C16MP13C	24.50	CF/CM48D	1225.00	39.50	28.40	14.50	12.25
TCE2B42S21S	TP9C080C16MP13C	21.00	XAF/XAUC42E	1225.00	40.00	29.00	14.50	12.25
TCE2B42S21S	TP9C080C16MP13C	21.00	XAF/XAUC48F	1225.00	39.50	28.40	14.50	12.25
TCE2B42S21S	TP9C080C16MP13C	24.50	XAFD42E	1225.00	40.00	28.80	14.50	12.25
TCE2B42S21S	TP9C080C16MP13C	24.50	XAFD48F	1225.00	39.50	28.40	14.50	12.25
TCE2B42S21S	TP9C080C16MP13C	21.00	XAHC42E	1225.00	39.50	28.60	14.30	12.00
TCE2B42S21S	TP9C080C16MP13C	21.00	XAHC48F	1225.00	39.50	28.40	14.50	12.25
TCE2B42S21S	TP9C080C16MP13C	24.50	XAHD42E	1225.00	39.50	28.60	14.50	12.25
TCE2B42S21S	TP9C080C16MP13C	24.50	XAHD48F	1225.00	39.50	28.40	14.50	12.25
TCE2B42S21S	TP9C100C16MP13C	21.00	CF/CM42C	1200.00	39.50	28.00	14.75	12.50
TCE2B42S21S	TP9C100C16MP13C	21.00	CF/CM48C	1200.00	39.50	28.00	15.00	12.50
TCE2B42S21S	TP9C100C16MP13C	24.50	CF/CM48D	1200.00	39.50	28.00	15.00	12.50
TCE2B42S21S	TP9C100C16MP13C	21.00	XAF/XAUC42E	1200.00	40.00	28.60	15.00	12.50
TCE2B42S21S	TP9C100C16MP13C	21.00	XAF/XAUC48F	1200.00	39.50	28.00	15.00	12.50
TCE2B42S21S	TP9C100C16MP13C	24.50	XAFD42E	1200.00	40.00	28.60	15.00	12.50
TCE2B42S21S	TP9C100C16MP13C	24.50	XAFD48F	1200.00	39.50	28.00	15.00	12.50
TCE2B42S21S	TP9C100C16MP13C	21.00	XAHC42E	1200.00	40.00	28.60	14.75	12.50
TCE2B42S21S	TP9C100C16MP13C	21.00	XAHC48F	1200.00	39.50	28.00	15.00	12.50
TCE2B42S21S	TP9C100C16MP13C	24.50	XAHD42E	1200.00	40.00	28.60	14.75	12.50
TCE2B42S21S	TP9C100C16MP13C	24.50	XAHD48F	1200.00	39.50	28.00	15.00	12.50
TCE2B42S21S	TP9C100C20MP13C	21.00	CF/CM42C	1250.00	39.50	28.40	14.75	12.50
TCE2B42S21S	TP9C100C20MP13C	21.00	CF/CM48C	1250.00	39.50	28.40	14.75	12.50
TCE2B42S21S	TP9C100C20MP13C	24.50	CF/CM48D	1225.00	39.50	28.40	14.75	12.50
TCE2B42S21S	TP9C100C20MP13C	21.00	XAF/XAUC42E	1250.00	40.00	29.00	14.75	12.50
TCE2B42S21S	TP9C100C20MP13C	21.00	XAF/XAUC48F	1250.00	40.00	28.80	14.75	12.50
TCE2B42S21S	TP9C100C20MP13C	24.50	XAFD42E	1250.00	40.00	29.00	15.00	12.50
TCE2B42S21S	TP9C100C20MP13C	24.50	XAFD48F	1250.00	40.00	28.80	15.00	12.50
TCE2B42S21S	TP9C100C20MP13C	21.00	XAHC42E	1250.00	40.00	29.00	14.75	12.50
TCE2B42S21S	TP9C100C20MP13C	21.00	XAHC48F	1250.00	40.00	28.80	15.00	12.50
TCE2B42S21S	TP9C100C20MP13C	24.50	XAHD42E	1250.00	40.00	29.00	14.75	12.50
TCE2B42S21S	TP9C100C20MP13C	24.50	XAHD48F	1250.00	40.00	28.80	14.75	12.50
TCE2B42S21S	TP9C120D20MP13C	24.50	CF/CM48D	1200.00	40.00	28.40	15.25	12.75
TCE2B42S21S	TP9C120D20MP13C	24.50	XAFD42E	1200.00	40.00	28.40	15.25	12.75
TCE2B42S21S	TP9C120D20MP13C	24.50	XAFD48F	1200.00	40.00	28.20	15.25	12.75
TCE2B42S21S	TP9C120D20MP13C	24.50	XAHD42E	1200.00	40.00	28.60	15.00	12.50
TCE2B42S21S	TP9C120D20MP13C	24.50	XAHD48F	1200.00	40.00	28.20	15.25	12.75
TCE2B42S21S	TPLC080C16MP13C	21.00	CF/CM42C	1200.00	39.50	28.00	14.75	12.50
TCE2B42S21S	TPLC080C16MP13C	21.00	CF/CM48C	1200.00	39.50	28.20	14.75	12.50
TCE2B42S21S	TPLC080C16MP13C	24.50	CF/CM48D	1200.00	39.50	28.00	14.75	12.50
TCE2B42S21S	TPLC080C16MP13C	21.00	XAF/XAUC42E	1200.00	40.00	28.60	14.75	12.50
TCE2B42S21S	TPLC080C16MP13C	21.00	XAF/XAUC48F	1200.00	39.50	28.00	14.75	12.50
TCE2B42S21S	TPLC080C16MP13C	24.50	XAFD42E	1200.00	40.00	28.60	15.00	12.50
TCE2B42S21S	TPLC080C16MP13C	24.50	XAFD48F	1200.00	39.50	28.00	15.00	12.50
TCE2B42S21S	TPLC080C16MP13C	21.00	XAHC42E	1200.00	39.50	28.20	14.75	12.50

Table 12: Furnace capacity - 3.5 ton

Outdoor unit model	Furnace model	Furnace width (in.)	Indoor coil model	Rated CFM	Net cool (MBH)	Sens cool (MBH)	SEER2	EER2
TCE2B42S21S	TPLC080C16MP13C	21.00	XAHC48F	1200.00	39.50	28.00	15.00	12.50
TCE2B42S21S	TPLC080C16MP13C	24.50	XAHD42E	1200.00	40.00	28.60	14.75	12.50
TCE2B42S21S	TPLC080C16MP13C	24.50	XAHD48F	1200.00	39.50	28.00	15.00	12.50
TCE2B42S21S	TPLC100C16MP13C	21.00	CF/CM42C	1200.00	39.50	28.00	14.75	12.50
TCE2B42S21S	TPLC100C16MP13C	21.00	CF/CM48C	1200.00	39.50	28.20	14.75	12.50
TCE2B42S21S	TPLC100C16MP13C	24.50	CF/CM48D	1200.00	39.50	28.00	14.75	12.50
TCE2B42S21S	TPLC100C16MP13C	21.00	XAF/XAUC42E	1200.00	40.00	28.60	14.75	12.50
TCE2B42S21S	TPLC100C16MP13C	21.00	XAF/XAUC48F	1200.00	39.50	28.00	14.75	12.50
TCE2B42S21S	TPLC100C16MP13C	24.50	XAFD42E	1200.00	40.00	28.60	15.00	12.50
TCE2B42S21S	TPLC100C16MP13C	24.50	XAFD48F	1200.00	39.50	28.00	15.00	12.50
TCE2B42S21S	TPLC100C16MP13C	21.00	XAHC42E	1200.00	39.50	28.20	14.75	12.50
TCE2B42S21S	TPLC100C16MP13C	21.00	XAHC48F	1200.00	39.50	28.00	15.00	12.50
TCE2B42S21S	TPLC100C16MP13C	24.50	XAHD42E	1200.00	40.00	28.60	14.75	12.50
TCE2B42S21S	TPLC100C16MP13C	24.50	XAHD48F	1200.00	39.50	28.00	15.00	12.50
TCE2B42S21S	TPLC100C20MP13C	21.00	CF/CM42C	1275.00	39.50	28.40	15.00	12.50
TCE2B42S21S	TPLC100C20MP13C	21.00	CF/CM48C	1275.00	39.50	28.60	15.00	12.50
TCE2B42S21S	TPLC100C20MP13C	24.50	CF/CM48D	1200.00	40.00	28.40	15.25	12.75
TCE2B42S21S	TPLC100C20MP13C	21.00	XAF/XAUC42E	1225.00	40.00	28.80	15.00	12.50
TCE2B42S21S	TPLC100C20MP13C	21.00	XAF/XAUC48F	1250.00	40.00	28.60	15.00	12.50
TCE2B42S21S	TPLC100C20MP13C	24.50	XAFD42E	1250.00	40.00	29.00	15.00	12.50
TCE2B42S21S	TPLC100C20MP13C	24.50	XAFD48F	1250.00	40.00	28.60	15.00	12.50
TCE2B42S21S	TPLC100C20MP13C	21.00	XAHC42E	1225.00	40.00	28.80	14.75	12.50
TCE2B42S21S	TPLC100C20MP13C	21.00	XAHC48F	1250.00	40.00	28.60	15.00	12.50
TCE2B42S21S	TPLC100C20MP13C	24.50	XAHD42E	1225.00	40.00	28.80	15.00	12.50
TCE2B42S21S	TPLC100C20MP13C	24.50	XAHD48F	1250.00	40.00	28.60	15.00	12.50
TCE2B42S21S	TPLC120C20MP13C	21.00	CF/CM42C	1275.00	39.50	28.40	15.00	12.50
TCE2B42S21S	TPLC120C20MP13C	21.00	CF/CM48C	1275.00	39.50	28.60	15.00	12.50
TCE2B42S21S	TPLC120C20MP13C	24.50	CF/CM48D	1200.00	40.00	28.40	15.25	12.75
TCE2B42S21S	TPLC120C20MP13C	21.00	XAF/XAUC42E	1225.00	40.00	28.80	15.00	12.50
TCE2B42S21S	TPLC120C20MP13C	21.00	XAF/XAUC48F	1250.00	40.00	28.60	15.00	12.50
TCE2B42S21S	TPLC120C20MP13C	24.50	XAFD42E	1250.00	40.00	29.00	15.00	12.50
TCE2B42S21S	TPLC120C20MP13C	24.50	XAFD48F	1250.00	40.00	28.60	15.00	12.50
TCE2B42S21S	TPLC120C20MP13C	21.00	XAHC42E	1225.00	40.00	28.80	14.75	12.50
TCE2B42S21S	TPLC120C20MP13C	21.00	XAHC48F	1250.00	40.00	28.60	15.00	12.50
TCE2B42S21S	TPLC120C20MP13C	24.50	XAHD42E	1225.00	40.00	28.80	15.00	12.50
TCE2B42S21S	TPLC120C20MP13C	24.50	XAHD48F	1250.00	40.00	28.60	15.00	12.50
TCE2B42S21S	CP9C080B12MP13C	21.00	CF/CM42C	1200.00	39.50	28.20	14.30	11.75
TCE2B42S21S	CP9C080B12MP13C	21.00	CF/CM48C	1200.00	39.50	28.40	14.30	11.75
TCE2B42S21S	CP9C080B12MP13C	21.00	XAF/XAUC42E	1200.00	39.50	28.40	14.30	11.75
TCE2B42S21S	CP9C080B12MP13C	21.00	XAF/XAUC48F	1200.00	39.50	28.20	14.30	11.75
TCE2B42S21S	CP9C080B12MP13C	21.00	XAHC48F	1200.00	39.50	28.20	14.30	12.00
TCE2B42S21S	CP9C080C16MP13C	21.00	CF/CM42C	1225.00	39.50	28.40	14.50	12.25
TCE2B42S21S	CP9C080C16MP13C	21.00	CF/CM48C	1225.00	39.50	28.40	14.50	12.25
TCE2B42S21S	CP9C080C16MP13C	24.50	CF/CM48D	1225.00	39.50	28.40	14.50	12.25
TCE2B42S21S	CP9C080C16MP13C	21.00	XAF/XAUC42E	1225.00	40.00	29.00	14.50	12.25
TCE2B42S21S	CP9C080C16MP13C	21.00	XAF/XAUC48F	1225.00	39.50	28.40	14.50	12.25
TCE2B42S21S	CP9C080C16MP13C	24.50	XAFD42E	1225.00	40.00	28.80	14.50	12.25
TCE2B42S21S	CP9C080C16MP13C	24.50	XAFD48F	1225.00	39.50	28.40	14.50	12.25
TCE2B42S21S	CP9C080C16MP13C	21.00	XAHC42E	1225.00	39.50	28.60	14.30	12.00
TCE2B42S21S	CP9C080C16MP13C	21.00	XAHC48F	1225.00	39.50	28.40	14.50	12.25
TCE2B42S21S	CP9C080C16MP13C	24.50	XAHD42E	1225.00	39.50	28.60	14.50	12.25
TCE2B42S21S	CP9C080C16MP13C	24.50	XAHD48F	1225.00	39.50	28.40	14.50	12.25
TCE2B42S21S	CP9C100C16MP13C	21.00	CF/CM42C	1200.00	39.50	28.00	14.75	12.50
TCE2B42S21S	CP9C100C16MP13C	21.00	CF/CM48C	1200.00	39.50	28.00	15.00	12.50
TCE2B42S21S	CP9C100C16MP13C	24.50	CF/CM48D	1200.00	39.50	28.00	15.00	12.50
TCE2B42S21S	CP9C100C16MP13C	21.00	XAF/XAUC42E	1200.00	40.00	28.60	15.00	12.50
TCE2B42S21S	CP9C100C16MP13C	21.00	XAF/XAUC48F	1200.00	39.50	28.00	15.00	12.50
TCE2B42S21S	CP9C100C16MP13C	24.50	XAFD42E	1200.00	40.00	28.60	15.00	12.50
TCE2B42S21S	CP9C100C16MP13C	24.50	XAFD48F	1200.00	39.50	28.00	15.00	12.50
TCE2B42S21S	CP9C100C16MP13C	21.00	XAHC42E	1200.00	40.00	28.60	14.75	12.50
TCE2B42S21S	CP9C100C16MP13C	21.00	XAHC48F	1200.00	39.50	28.00	15.00	12.50
TCE2B42S21S	CP9C100C16MP13C	24.50	XAHD42E	1200.00	40.00	28.60	14.75	12.50
TCE2B42S21S	CP9C100C16MP13C	24.50	XAHD48F	1200.00	39.50	28.00	15.00	12.50

Table 12: Furnace capacity - 3.5 ton

Outdoor unit model	Furnace model	Furnace width (in.)	Indoor coil model	Rated CFM	Net cool (MBH)	Sens cool (MBH)	SEER2	EER2
TCE2B42S21S	CP9C100C20MP13C	21.00	CF/CM42C	1250.00	39.50	28.40	14.75	12.50
TCE2B42S21S	CP9C100C20MP13C	21.00	CF/CM48C	1250.00	39.50	28.40	14.75	12.50
TCE2B42S21S	CP9C100C20MP13C	24.50	CF/CM48D	1225.00	39.50	28.40	14.75	12.50
TCE2B42S21S	CP9C100C20MP13C	21.00	XAF/XAUC42E	1250.00	40.00	29.00	14.75	12.50
TCE2B42S21S	CP9C100C20MP13C	21.00	XAF/XAUC48F	1250.00	40.00	28.80	14.75	12.50
TCE2B42S21S	CP9C100C20MP13C	24.50	XAFD42E	1250.00	40.00	29.00	15.00	12.50
TCE2B42S21S	CP9C100C20MP13C	24.50	XAFD48F	1250.00	40.00	28.80	15.00	12.50
TCE2B42S21S	CP9C100C20MP13C	21.00	XAHC42E	1250.00	40.00	29.00	14.75	12.50
TCE2B42S21S	CP9C100C20MP13C	21.00	XAHC48F	1250.00	40.00	28.80	15.00	12.50
TCE2B42S21S	CP9C100C20MP13C	24.50	XAHD42E	1250.00	40.00	29.00	14.75	12.50
TCE2B42S21S	CP9C100C20MP13C	24.50	XAHD48F	1250.00	40.00	28.80	14.75	12.50
TCE2B42S21S	CP9C120D20MP13C	24.50	CF/CM48D	1200.00	40.00	28.40	15.25	12.75
TCE2B42S21S	CP9C120D20MP13C	24.50	XAFD42E	1200.00	40.00	28.40	15.25	12.75
TCE2B42S21S	CP9C120D20MP13C	24.50	XAFD48F	1200.00	40.00	28.20	15.25	12.75
TCE2B42S21S	CP9C120D20MP13C	24.50	XAHD42E	1200.00	40.00	28.60	15.00	12.50
TCE2B42S21S	CP9C120D20MP13C	24.50	XAHD48F	1200.00	40.00	28.20	15.25	12.75
TCE2B42S21S	CPLC080C16MP13C	21.00	CF/CM42C	1200.00	39.50	28.00	14.75	12.50
TCE2B42S21S	CPLC080C16MP13C	21.00	CF/CM48C	1200.00	39.50	28.20	14.75	12.50
TCE2B42S21S	CPLC080C16MP13C	24.50	CF/CM48D	1200.00	39.50	28.00	14.75	12.50
TCE2B42S21S	CPLC080C16MP13C	21.00	XAF/XAUC42E	1200.00	40.00	28.60	14.75	12.50
TCE2B42S21S	CPLC080C16MP13C	21.00	XAF/XAUC48F	1200.00	39.50	28.00	14.75	12.50
TCE2B42S21S	CPLC080C16MP13C	24.50	XAFD42E	1200.00	40.00	28.60	15.00	12.50
TCE2B42S21S	CPLC080C16MP13C	24.50	XAFD48F	1200.00	39.50	28.00	15.00	12.50
TCE2B42S21S	CPLC080C16MP13C	21.00	XAHC42E	1200.00	39.50	28.20	14.75	12.50
TCE2B42S21S	CPLC080C16MP13C	21.00	XAHC48F	1200.00	39.50	28.00	15.00	12.50
TCE2B42S21S	CPLC080C16MP13C	24.50	XAHD42E	1200.00	40.00	28.60	14.75	12.50
TCE2B42S21S	CPLC080C16MP13C	24.50	XAHD48F	1200.00	39.50	28.00	15.00	12.50
TCE2B42S21S	CPLC100C16MP13C	21.00	CF/CM42C	1200.00	39.50	28.00	14.75	12.50
TCE2B42S21S	CPLC100C16MP13C	21.00	CF/CM48C	1200.00	39.50	28.20	14.75	12.50
TCE2B42S21S	CPLC100C16MP13C	24.50	CF/CM48D	1200.00	39.50	28.00	14.75	12.50
TCE2B42S21S	CPLC100C16MP13C	21.00	XAF/XAUC42E	1200.00	40.00	28.60	14.75	12.50
TCE2B42S21S	CPLC100C16MP13C	21.00	XAF/XAUC48F	1200.00	39.50	28.00	14.75	12.50
TCE2B42S21S	CPLC100C16MP13C	24.50	XAFD42E	1200.00	40.00	28.60	15.00	12.50
TCE2B42S21S	CPLC100C16MP13C	24.50	XAFD48F	1200.00	39.50	28.00	15.00	12.50
TCE2B42S21S	CPLC100C16MP13C	21.00	XAHC42E	1200.00	39.50	28.20	14.75	12.50
TCE2B42S21S	CPLC100C16MP13C	21.00	XAHC48F	1200.00	39.50	28.00	15.00	12.50
TCE2B42S21S	CPLC100C16MP13C	24.50	XAHD42E	1200.00	40.00	28.60	14.75	12.50
TCE2B42S21S	CPLC100C16MP13C	24.50	XAHD48F	1200.00	39.50	28.00	15.00	12.50
TCE2B42S21S	CPLC100C20MP13C	21.00	CF/CM42C	1275.00	39.50	28.40	15.00	12.50
TCE2B42S21S	CPLC100C20MP13C	21.00	CF/CM48C	1275.00	39.50	28.60	15.00	12.50
TCE2B42S21S	CPLC100C20MP13C	24.50	CF/CM48D	1200.00	40.00	28.40	15.25	12.75
TCE2B42S21S	CPLC100C20MP13C	21.00	XAF/XAUC42E	1225.00	40.00	28.80	15.00	12.50
TCE2B42S21S	CPLC100C20MP13C	21.00	XAF/XAUC48F	1250.00	40.00	28.60	15.00	12.50
TCE2B42S21S	CPLC100C20MP13C	24.50	XAFD42E	1250.00	40.00	29.00	15.00	12.50
TCE2B42S21S	CPLC100C20MP13C	24.50	XAFD48F	1250.00	40.00	28.60	15.00	12.50
TCE2B42S21S	CPLC100C20MP13C	21.00	XAHC42E	1225.00	40.00	28.80	14.75	12.50
TCE2B42S21S	CPLC100C20MP13C	21.00	XAHC48F	1250.00	40.00	28.60	15.00	12.50
TCE2B42S21S	CPLC100C20MP13C	24.50	XAHD42E	1225.00	40.00	28.80	15.00	12.50
TCE2B42S21S	CPLC100C20MP13C	24.50	XAHD48F	1250.00	40.00	28.60	15.00	12.50
TCE2B42S21S	CPLC120C20MP13C	21.00	CF/CM42C	1275.00	39.50	28.40	15.00	12.50
TCE2B42S21S	CPLC120C20MP13C	21.00	CF/CM48C	1275.00	39.50	28.60	15.00	12.50
TCE2B42S21S	CPLC120C20MP13C	24.50	CF/CM48D	1200.00	40.00	28.40	15.25	12.75
TCE2B42S21S	CPLC120C20MP13C	21.00	XAF/XAUC42E	1225.00	40.00	28.80	15.00	12.50
TCE2B42S21S	CPLC120C20MP13C	21.00	XAF/XAUC48F	1250.00	40.00	28.60	15.00	12.50
TCE2B42S21S	CPLC120C20MP13C	24.50	XAFD42E	1250.00	40.00	29.00	15.00	12.50
TCE2B42S21S	CPLC120C20MP13C	24.50	XAFD48F	1250.00	40.00	28.60	15.00	12.50
TCE2B42S21S	CPLC120C20MP13C	21.00	XAHC42E	1225.00	40.00	28.80	14.75	12.50
TCE2B42S21S	CPLC120C20MP13C	21.00	XAHC48F	1250.00	40.00	28.60	15.00	12.50
TCE2B42S21S	CPLC120C20MP13C	24.50	XAHD42E	1225.00	40.00	28.80	15.00	12.50
TCE2B42S21S	CPLC120C20MP13C	24.50	XAHD48F	1250.00	40.00	28.60	15.00	12.50

Furnace capacity - 4 ton

Table 13: Furnace capacity - 4 ton

Outdoor unit model	Furnace model	Furnace width (in.)	Indoor coil model	Rated CFM	Net cool (MBH)	Sens cool (MBH)	SEER2	EER2
TCE2B48S21S	TL8E080C16UH11	21.00	CF/CM48C	1450.00	47.00	33.60	13.80	11.50
TCE2B48S21S	TL8E080C16UH11	24.50	CF/CM48D	1475.00	47.00	33.80	14.00	11.50
TCE2B48S21S	TL8E080C16UH11	21.00	CF/CM60C	1450.00	47.50	33.60	14.00	11.75
TCE2B48S21S	TL8E080C16UH11	24.50	CF/CM60D	1475.00	47.50	33.80	14.00	11.75
TCE2B48S21S	TL8E080C16UH11	21.00	XAF/XAUC48F	1425.00	47.00	33.20	13.80	11.25
TCE2B48S21S	TL8E080C16UH11	21.00	XAF/XAUC60G	1450.00	48.00	34.00	14.00	11.75
TCE2B48S21S	TL8E080C16UH11	24.50	XAF/XAUD60G	1450.00	47.50	33.60	14.00	11.75
TCE2B48S21S	TL8E080C16UH11	24.50	XAFD48F	1450.00	47.00	33.40	13.80	11.50
TCE2B48S21S	TL8E080C16UH11	21.00	XAHC48F	1425.00	47.00	33.20	13.80	11.25
TCE2B48S21S	TL8E080C16UH11	21.00	XAHC60G	1450.00	48.00	34.00	14.00	11.75
TCE2B48S21S	TL8E080C16UH11	24.50	XAHD48F	1425.00	47.00	33.20	13.80	11.25
TCE2B48S21S	TL8E080C16UH11	21.00	XAHD60G	1425.00	47.50	33.40	13.80	11.25
TCE2B48S21S	TL8E100C20UH11	21.00	CF/CM48C	1500.00	47.50	34.20	14.25	11.75
TCE2B48S21S	TL8E100C20UH11	24.50	CF/CM48D	1525.00	47.50	34.40	14.25	11.75
TCE2B48S21S	TL8E100C20UH11	21.00	CF/CM60C	1500.00	48.00	34.20	14.25	12.00
TCE2B48S21S	TL8E100C20UH11	24.50	CF/CM60D	1525.00	47.50	34.00	14.50	12.00
TCE2B48S21S	TL8E100C20UH11	21.00	XAF/XAUC48F	1475.00	47.50	33.80	14.00	11.75
TCE2B48S21S	TL8E100C20UH11	21.00	XAF/XAUC60G	1500.00	48.00	34.20	14.50	12.00
TCE2B48S21S	TL8E100C20UH11	24.50	XAF/XAUD60G	1500.00	47.50	33.80	14.50	12.00
TCE2B48S21S	TL8E100C20UH11	24.50	XAFD48F	1475.00	47.50	33.80	14.00	11.75
TCE2B48S21S	TL8E100C20UH11	21.00	XAHC48F	1475.00	47.50	33.80	14.00	11.75
TCE2B48S21S	TL8E100C20UH11	21.00	XAHC60G	1500.00	48.00	34.20	14.50	12.00
TCE2B48S21S	TL8E100C20UH11	24.50	XAHD48F	1475.00	47.50	33.80	14.00	11.75
TCE2B48S21S	TL8E100C20UH11	21.00	XAHD60G	1475.00	48.00	34.00	14.25	12.00
TCE2B48S21S	TL9E080C16UH11	21.00	CF/CM48C	1325.00	46.00	31.80	14.00	11.75
TCE2B48S21S	TL9E080C16UH11	24.50	CF/CM48D	1325.00	46.00	31.80	14.00	11.75
TCE2B48S21S	TL9E080C16UH11	21.00	CF/CM60C	1475.00	47.50	34.00	13.80	11.25
TCE2B48S21S	TL9E080C16UH11	24.50	CF/CM60D	1325.00	46.50	32.00	14.00	11.75
TCE2B48S21S	TL9E080C16UH11	21.00	XAF/XAUC60G	1475.00	47.50	34.00	13.80	11.25
TCE2B48S21S	TL9E080C16UH11	24.50	XAF/XAUD60G	1475.00	47.50	34.00	13.80	11.25
TCE2B48S21S	TL9E080C16UH11	21.00	XAHC60G	1325.00	47.50	32.60	14.25	11.75
TCE2B48S21S	TL9E100C20UH11	21.00	CF/CM48C	1475.00	47.50	34.00	14.00	11.75
TCE2B48S21S	TL9E100C20UH11	24.50	CF/CM48D	1500.00	47.50	34.20	14.00	11.75
TCE2B48S21S	TL9E100C20UH11	21.00	CF/CM60C	1475.00	48.00	34.20	14.00	11.75
TCE2B48S21S	TL9E100C20UH11	24.50	CF/CM60D	1500.00	47.50	34.00	14.25	11.75
TCE2B48S21S	TL9E100C20UH11	21.00	XAF/XAUC48F	1450.00	47.00	33.20	14.00	11.50
TCE2B48S21S	TL9E100C20UH11	21.00	XAF/XAUC60G	1475.00	48.00	34.00	14.25	11.75
TCE2B48S21S	TL9E100C20UH11	24.50	XAF/XAUD60G	1475.00	47.50	33.80	14.25	11.75
TCE2B48S21S	TL9E100C20UH11	24.50	XAFD48F	1475.00	47.00	33.40	14.00	11.75
TCE2B48S21S	TL9E100C20UH11	21.00	XAHC48F	1450.00	47.00	33.20	14.00	11.50
TCE2B48S21S	TL9E100C20UH11	21.00	XAHC60G	1475.00	48.00	34.00	14.25	11.75
TCE2B48S21S	TL9E100C20UH11	24.50	XAHD48F	1475.00	47.00	33.40	14.00	11.75
TCE2B48S21S	TL9E100C20UH11	21.00	XAHD60G	1450.00	48.00	34.00	14.25	11.75
TCE2B48S21S	TM8E080C16MP11	21.00	CF/CM48C	1475.00	47.00	33.80	14.00	11.50
TCE2B48S21S	TM8E080C16MP11	24.50	CF/CM48D	1500.00	47.50	34.40	14.00	11.50
TCE2B48S21S	TM8E080C16MP11	21.00	CF/CM60C	1475.00	47.50	33.80	14.00	11.75
TCE2B48S21S	TM8E080C16MP11	24.50	CF/CM60D	1500.00	47.50	34.00	14.00	11.75
TCE2B48S21S	TM8E080C16MP11	21.00	XAF/XAUC48F	1450.00	47.00	33.40	13.80	11.50
TCE2B48S21S	TM8E080C16MP11	21.00	XAF/XAUC60G	1475.00	48.00	34.20	14.00	11.75
TCE2B48S21S	TM8E080C16MP11	24.50	XAF/XAUD60G	1475.00	47.50	33.80	14.00	11.75
TCE2B48S21S	TM8E080C16MP11	24.50	XAFD48F	1475.00	47.00	33.60	14.00	11.50
TCE2B48S21S	TM8E080C16MP11	21.00	XAHC48F	1450.00	47.00	33.40	13.80	11.50
TCE2B48S21S	TM8E080C16MP11	21.00	XAHC60G	1475.00	47.50	33.80	14.00	11.75
TCE2B48S21S	TM8E080C16MP11	24.50	XAHD48F	1450.00	47.00	33.40	13.80	11.50
TCE2B48S21S	TM8E080C16MP11	21.00	XAHD60G	1450.00	48.00	34.00	14.00	11.75
TCE2B48S21S	TM8E080C20MP11	21.00	CF/CM48C	1325.00	46.50	32.00	14.50	12.00
TCE2B48S21S	TM8E080C20MP11	24.50	CF/CM48D	1325.00	46.50	32.00	14.50	12.00
TCE2B48S21S	TM8E080C20MP11	21.00	CF/CM60C	1425.00	47.50	33.20	14.25	12.00
TCE2B48S21S	TM8E080C20MP11	24.50	CF/CM60D	1350.00	47.00	32.20	14.50	12.00
TCE2B48S21S	TM8E080C20MP11	21.00	XAF/XAUC48F	1400.00	47.00	32.80	14.00	11.75

Table 13: Furnace capacity - 4 ton

Outdoor unit model	Furnace model	Furnace width (in.)	Indoor coil model	Rated CFM	Net cool (MBH)	Sens cool (MBH)	SEER2	EER2
TCE2B48S21S	TM8E080C20MP11	21.00	XAF/XAUC60G	1425.00	48.00	33.60	14.50	12.00
TCE2B48S21S	TM8E080C20MP11	24.50	XAF/XAUD60G	1425.00	47.50	33.20	14.50	12.00
TCE2B48S21S	TM8E080C20MP11	24.50	XAFD48F	1425.00	47.00	33.00	14.00	11.75
TCE2B48S21S	TM8E080C20MP11	21.00	XAHC48F	1400.00	47.00	32.80	14.00	11.75
TCE2B48S21S	TM8E080C20MP11	21.00	XAHC60G	1325.00	48.00	32.80	14.75	12.25
TCE2B48S21S	TM8E080C20MP11	24.50	XAHD48F	1400.00	47.00	32.80	14.00	11.75
TCE2B48S21S	TM8E080C20MP11	21.00	XAHD60G	1400.00	48.00	33.40	14.50	12.00
TCE2B48S21S	TM8E100C16MP11	21.00	CF/CM48C	1475.00	47.00	33.80	14.00	11.50
TCE2B48S21S	TM8E100C16MP11	24.50	CF/CM48D	1500.00	47.50	34.40	14.00	11.75
TCE2B48S21S	TM8E100C16MP11	21.00	CF/CM60C	1475.00	47.50	33.80	14.00	11.75
TCE2B48S21S	TM8E100C16MP11	24.50	CF/CM60D	1500.00	47.50	34.00	14.00	11.75
TCE2B48S21S	TM8E100C16MP11	21.00	XAF/XAUC48F	1450.00	47.00	33.40	13.80	11.50
TCE2B48S21S	TM8E100C16MP11	21.00	XAF/XAUC60G	1475.00	47.50	33.80	14.00	11.75
TCE2B48S21S	TM8E100C16MP11	24.50	XAF/XAUD60G	1475.00	47.50	33.80	14.00	11.75
TCE2B48S21S	TM8E100C16MP11	24.50	XAFD48F	1450.00	47.00	33.40	13.80	11.50
TCE2B48S21S	TM8E100C16MP11	21.00	XAHC48F	1450.00	47.00	33.40	13.80	11.50
TCE2B48S21S	TM8E100C16MP11	21.00	XAHC60G	1475.00	47.50	33.80	14.00	11.75
TCE2B48S21S	TM8E100C16MP11	24.50	XAHD48F	1450.00	47.00	33.40	13.80	11.50
TCE2B48S21S	TM8E100C16MP11	21.00	XAHD60G	1450.00	48.00	34.00	14.00	11.75
TCE2B48S21S	TM8E100C20MP11	21.00	CF/CM48C	1400.00	47.00	33.00	14.25	11.75
TCE2B48S21S	TM8E100C20MP11	24.50	CF/CM48D	1325.00	46.50	32.00	14.50	12.00
TCE2B48S21S	TM8E100C20MP11	21.00	CF/CM60C	1400.00	47.50	33.00	14.25	12.00
TCE2B48S21S	TM8E100C20MP11	24.50	CF/CM60D	1325.00	47.00	32.00	14.50	12.00
TCE2B48S21S	TM8E100C20MP11	21.00	XAF/XAUC48F	1375.00	46.50	32.20	14.00	11.75
TCE2B48S21S	TM8E100C20MP11	21.00	XAF/XAUC60G	1400.00	48.00	33.40	14.50	12.00
TCE2B48S21S	TM8E100C20MP11	24.50	XAF/XAUD60G	1400.00	47.50	33.00	14.50	12.00
TCE2B48S21S	TM8E100C20MP11	24.50	XAFD48F	1375.00	46.50	32.20	14.00	11.75
TCE2B48S21S	TM8E100C20MP11	21.00	XAHC48F	1375.00	46.50	32.20	14.00	11.75
TCE2B48S21S	TM8E100C20MP11	21.00	XAHC60G	1400.00	48.00	33.40	14.50	12.00
TCE2B48S21S	TM8E100C20MP11	24.50	XAHD48F	1375.00	46.50	32.20	14.00	11.75
TCE2B48S21S	TM8E100C20MP11	21.00	XAHD60G	1375.00	48.00	33.20	14.50	12.00
TCE2B48S21S	TM8E120C16MP11	21.00	CF/CM48C	1475.00	47.00	33.80	14.00	11.50
TCE2B48S21S	TM8E120C16MP11	24.50	CF/CM48D	1500.00	47.50	34.40	14.00	11.75
TCE2B48S21S	TM8E120C16MP11	21.00	CF/CM60C	1475.00	47.50	33.80	14.00	11.75
TCE2B48S21S	TM8E120C16MP11	24.50	CF/CM60D	1500.00	47.50	34.00	14.00	11.75
TCE2B48S21S	TM8E120C16MP11	21.00	XAF/XAUC48F	1450.00	47.00	33.40	13.80	11.50
TCE2B48S21S	TM8E120C16MP11	21.00	XAF/XAUC60G	1475.00	47.50	33.80	14.00	11.75
TCE2B48S21S	TM8E120C16MP11	24.50	XAF/XAUD60G	1475.00	47.50	33.80	14.00	11.75
TCE2B48S21S	TM8E120C16MP11	24.50	XAFD48F	1475.00	47.00	33.60	14.00	11.50
TCE2B48S21S	TM8E120C16MP11	21.00	XAHC48F	1450.00	47.00	33.40	13.80	11.50
TCE2B48S21S	TM8E120C16MP11	21.00	XAHC60G	1475.00	48.00	34.20	14.00	11.75
TCE2B48S21S	TM8E120C16MP11	24.50	XAHD48F	1475.00	47.00	33.60	14.00	11.50
TCE2B48S21S	TM8E120C16MP11	21.00	XAHD60G	1450.00	48.00	34.00	14.00	11.75
TCE2B48S21S	TM8E120C20MP11	21.00	CF/CM48C	1375.00	46.50	32.40	14.25	11.75
TCE2B48S21S	TM8E120C20MP11	24.50	CF/CM48D	1325.00	46.50	32.00	14.50	12.00
TCE2B48S21S	TM8E120C20MP11	21.00	CF/CM60C	1375.00	47.00	32.60	14.50	12.00
TCE2B48S21S	TM8E120C20MP11	24.50	CF/CM60D	1325.00	47.00	32.00	14.50	12.00
TCE2B48S21S	TM8E120C20MP11	21.00	XAF/XAUC48F	1350.00	46.50	32.00	14.25	11.75
TCE2B48S21S	TM8E120C20MP11	21.00	XAF/XAUC60G	1375.00	48.00	33.20	14.50	12.00
TCE2B48S21S	TM8E120C20MP11	24.50	XAF/XAUD60G	1375.00	47.00	32.40	14.50	12.00
TCE2B48S21S	TM8E120C20MP11	24.50	XAFD48F	1375.00	46.50	32.20	14.25	11.75
TCE2B48S21S	TM8E120C20MP11	21.00	XAHC48F	1375.00	46.50	32.20	14.25	11.75
TCE2B48S21S	TM8E120C20MP11	21.00	XAHC60G	1400.00	48.00	33.40	14.50	12.00
TCE2B48S21S	TM8E120C20MP11	24.50	XAHD48F	1375.00	46.50	32.20	14.25	11.75
TCE2B48S21S	TM8E120C20MP11	21.00	XAHD60G	1375.00	48.00	33.20	14.50	12.00
TCE2B48S21S	TM8E130D20MP11	24.50	CF/CM48D	1525.00	47.50	34.40	14.25	11.75
TCE2B48S21S	TM8E130D20MP11	24.50	CF/CM60D	1525.00	48.00	34.40	14.25	11.75
TCE2B48S21S	TM8E130D20MP11	24.50	XAF/XAUD60G	1500.00	48.00	34.20	14.25	12.00
TCE2B48S21S	TM8E130D20MP11	24.50	XAFD48F	1500.00	47.50	34.00	14.00	11.75
TCE2B48S21S	TM8E130D20MP11	24.50	XAHD48F	1475.00	47.00	33.40	14.00	11.75
TCE2B48S21S	TM8E130D20MP11	21.00	XAHD60G	1475.00	48.00	34.00	14.25	11.75
TCE2B48S21S	TM8V080C16MP12C	21.00	CF/CM48C	1400.00	47.00	33.20	14.00	11.75
TCE2B48S21S	TM8V080C16MP12C	24.50	CF/CM48D	1375.00	46.50	32.60	14.00	11.75

Table 13: Furnace capacity - 4 ton

Outdoor unit model	Furnace model	Furnace width (in.)	Indoor coil model	Rated CFM	Net cool (MBH)	Sens cool (MBH)	SEER2	EER2
TCE2B48S21S	TM8V080C16MP12C	21.00	CF/CM60C	1400.00	47.50	33.20	14.00	11.75
TCE2B48S21S	TM8V080C16MP12C	24.50	CF/CM60D	1375.00	47.00	32.60	14.25	11.75
TCE2B48S21S	TM8V080C16MP12C	21.00	XAF/XAUC48F	1400.00	47.00	33.00	14.00	11.50
TCE2B48S21S	TM8V080C16MP12C	21.00	XAF/XAUC60G	1400.00	48.00	33.60	14.25	11.75
TCE2B48S21S	TM8V080C16MP12C	24.50	XAF/XAUD60G	1400.00	47.50	33.20	14.25	11.75
TCE2B48S21S	TM8V080C16MP12C	24.50	XAFD48F	1400.00	47.00	33.00	14.00	11.50
TCE2B48S21S	TM8V080C16MP12C	21.00	XAHC48F	1400.00	47.00	33.00	14.00	11.50
TCE2B48S21S	TM8V080C16MP12C	21.00	XAHC60G	1400.00	48.00	33.60	14.25	11.75
TCE2B48S21S	TM8V080C16MP12C	24.50	XAHD48F	1400.00	47.00	33.00	14.00	11.50
TCE2B48S21S	TM8V080C16MP12C	21.00	XAHD60G	1400.00	48.00	33.60	14.00	11.75
TCE2B48S21S	TM8V100C16MP12C	21.00	CF/CM48C	1400.00	47.00	33.20	14.00	11.75
TCE2B48S21S	TM8V100C16MP12C	24.50	CF/CM48D	1375.00	46.50	32.60	14.00	11.75
TCE2B48S21S	TM8V100C16MP12C	21.00	CF/CM60C	1400.00	47.50	33.20	14.00	11.75
TCE2B48S21S	TM8V100C16MP12C	24.50	CF/CM60D	1375.00	47.00	32.60	14.25	11.75
TCE2B48S21S	TM8V100C16MP12C	21.00	XAF/XAUC48F	1400.00	47.00	33.00	14.00	11.50
TCE2B48S21S	TM8V100C16MP12C	21.00	XAF/XAUC60G	1400.00	48.00	33.60	14.25	11.75
TCE2B48S21S	TM8V100C16MP12C	24.50	XAF/XAUD60G	1400.00	47.50	33.20	14.25	11.75
TCE2B48S21S	TM8V100C16MP12C	24.50	XAFD48F	1400.00	47.00	33.00	14.00	11.50
TCE2B48S21S	TM8V100C16MP12C	21.00	XAHC48F	1400.00	47.00	33.00	14.00	11.50
TCE2B48S21S	TM8V100C16MP12C	21.00	XAHC60G	1400.00	48.00	33.60	14.25	11.75
TCE2B48S21S	TM8V100C16MP12C	24.50	XAHD48F	1400.00	47.00	33.00	14.00	11.50
TCE2B48S21S	TM8V100C16MP12C	21.00	XAHD60G	1400.00	48.00	33.60	14.00	11.75
TCE2B48S21S	TM8V100C20MP12C	21.00	CF/CM48C	1325.00	46.50	32.00	14.25	11.75
TCE2B48S21S	TM8V100C20MP12C	24.50	CF/CM48D	1325.00	46.50	32.00	14.25	12.00
TCE2B48S21S	TM8V100C20MP12C	21.00	CF/CM60C	1325.00	47.00	32.20	14.25	12.00
TCE2B48S21S	TM8V100C20MP12C	24.50	CF/CM60D	1400.00	47.50	33.00	14.50	12.00
TCE2B48S21S	TM8V100C20MP12C	21.00	XAF/XAUC48F	1375.00	46.50	32.20	14.00	11.75
TCE2B48S21S	TM8V100C20MP12C	21.00	XAF/XAUC60G	1325.00	48.00	32.80	14.50	12.00
TCE2B48S21S	TM8V100C20MP12C	24.50	XAF/XAUD60G	1425.00	47.50	33.20	14.50	12.00
TCE2B48S21S	TM8V100C20MP12C	24.50	XAFD48F	1325.00	46.00	31.60	14.25	11.75
TCE2B48S21S	TM8V100C20MP12C	21.00	XAHC48F	1325.00	46.00	31.60	14.25	11.75
TCE2B48S21S	TM8V100C20MP12C	21.00	XAHC60G	1325.00	48.00	32.80	14.50	12.00
TCE2B48S21S	TM8V100C20MP12C	24.50	XAHD48F	1325.00	46.00	31.60	14.25	11.75
TCE2B48S21S	TM8V100C20MP12C	21.00	XAHD60G	1325.00	47.50	32.40	14.50	12.00
TCE2B48S21S	TM8V120C20MP12C	21.00	CF/CM48C	1325.00	46.50	32.00	14.25	11.75
TCE2B48S21S	TM8V120C20MP12C	24.50	CF/CM48D	1325.00	46.50	32.00	14.25	12.00
TCE2B48S21S	TM8V120C20MP12C	21.00	CF/CM60C	1325.00	47.00	32.20	14.25	12.00
TCE2B48S21S	TM8V120C20MP12C	24.50	CF/CM60D	1400.00	47.50	33.00	14.50	12.00
TCE2B48S21S	TM8V120C20MP12C	21.00	XAF/XAUC48F	1375.00	46.50	32.20	14.00	11.75
TCE2B48S21S	TM8V120C20MP12C	21.00	XAF/XAUC60G	1325.00	48.00	32.80	14.50	12.00
TCE2B48S21S	TM8V120C20MP12C	24.50	XAF/XAUD60G	1425.00	47.50	33.20	14.50	12.00
TCE2B48S21S	TM8V120C20MP12C	24.50	XAFD48F	1325.00	46.00	31.60	14.25	11.75
TCE2B48S21S	TM8V120C20MP12C	21.00	XAHC48F	1325.00	46.00	31.60	14.25	11.75
TCE2B48S21S	TM8V120C20MP12C	21.00	XAHC60G	1325.00	48.00	32.80	14.50	12.00
TCE2B48S21S	TM8V120C20MP12C	24.50	XAHD48F	1325.00	46.00	31.60	14.25	11.75
TCE2B48S21S	TM8V120C20MP12C	21.00	XAHD60G	1325.00	47.50	32.40	14.50	12.00
TCE2B48S21S	TM8Y080C16MP11	21.00	XAF/XAUC48F	1400.00	47.00	33.00	14.00	11.50
TCE2B48S21S	TM8Y080C16MP11	21.00	XAF/XAUC60G	1425.00	48.00	33.80	14.25	11.75
TCE2B48S21S	TM8Y080C16MP11	24.50	XAF/XAUD60G	1425.00	47.50	33.40	14.25	11.75
TCE2B48S21S	TM8Y080C16MP11	24.50	XAFD48F	1400.00	47.00	33.00	14.00	11.50
TCE2B48S21S	TM8Y080C16MP11	21.00	XAHC60G	1425.00	48.00	33.80	14.25	11.75
TCE2B48S21S	TM8Y080C16MP11	24.50	XAHD48F	1400.00	47.00	33.00	14.00	11.50
TCE2B48S21S	TM8Y080C16MP11	21.00	XAHD60G	1400.00	48.00	33.60	14.00	11.75
TCE2B48S21S	TM8Y100C16MP11	21.00	XAF/XAUC48F	1400.00	47.00	33.00	14.00	11.50
TCE2B48S21S	TM8Y100C16MP11	21.00	XAF/XAUC60G	1425.00	48.00	33.80	14.25	11.75
TCE2B48S21S	TM8Y100C16MP11	24.50	XAF/XAUD60G	1425.00	47.50	33.40	14.25	11.75
TCE2B48S21S	TM8Y100C16MP11	24.50	XAFD48F	1400.00	47.00	33.00	14.00	11.50
TCE2B48S21S	TM8Y100C16MP11	21.00	XAHC60G	1425.00	48.00	33.80	14.25	11.75
TCE2B48S21S	TM8Y100C16MP11	24.50	XAHD48F	1400.00	47.00	33.00	14.00	11.50
TCE2B48S21S	TM8Y100C16MP11	21.00	XAHD60G	1400.00	48.00	33.60	14.00	11.75
TCE2B48S21S	TM8Y100C20MP11	21.00	CF/CM48C	1425.00	47.50	33.60	14.25	11.75
TCE2B48S21S	TM8Y100C20MP11	24.50	CF/CM48D	1450.00	47.50	33.80	14.25	11.75
TCE2B48S21S	TM8Y100C20MP11	21.00	CF/CM60C	1400.00	47.50	33.20	14.25	12.00

Table 13: Furnace capacity - 4 ton

Outdoor unit model	Furnace model	Furnace width (in.)	Indoor coil model	Rated CFM	Net cool (MBH)	Sens cool (MBH)	SEER2	EER2
TCE2B48S21S	TM8Y100C20MP11	24.50	CF/CM60D	1450.00	47.50	33.40	14.50	12.00
TCE2B48S21S	TM8Y100C20MP11	21.00	XAF/XAUC48F	1375.00	46.50	32.20	14.00	11.75
TCE2B48S21S	TM8Y100C20MP11	21.00	XAF/XAUC60G	1400.00	48.00	33.40	14.50	12.00
TCE2B48S21S	TM8Y100C20MP11	24.50	XAF/XAUD60G	1400.00	47.50	33.00	14.50	12.00
TCE2B48S21S	TM8Y100C20MP11	24.50	XAFD48F	1400.00	47.00	32.80	14.00	11.75
TCE2B48S21S	TM8Y100C20MP11	21.00	XAHC60G	1425.00	48.00	33.60	14.50	12.00
TCE2B48S21S	TM8Y100C20MP11	24.50	XAHD48F	1400.00	47.00	32.80	14.00	11.75
TCE2B48S21S	TM8Y100C20MP11	21.00	XAHD60G	1400.00	48.00	33.40	14.50	12.00
TCE2B48S21S	TM8Y120C20MP11	21.00	CF/CM48C	1425.00	47.50	33.60	14.25	11.75
TCE2B48S21S	TM8Y120C20MP11	24.50	CF/CM48D	1450.00	47.50	33.80	14.25	11.75
TCE2B48S21S	TM8Y120C20MP11	21.00	CF/CM60C	1400.00	47.50	33.20	14.25	12.00
TCE2B48S21S	TM8Y120C20MP11	24.50	CF/CM60D	1450.00	47.50	33.40	14.50	12.00
TCE2B48S21S	TM8Y120C20MP11	21.00	XAF/XAUC48F	1375.00	46.50	32.20	14.00	11.75
TCE2B48S21S	TM8Y120C20MP11	21.00	XAF/XAUC60G	1400.00	48.00	33.40	14.50	12.00
TCE2B48S21S	TM8Y120C20MP11	24.50	XAF/XAUD60G	1400.00	47.50	33.00	14.50	12.00
TCE2B48S21S	TM8Y120C20MP11	24.50	XAFD48F	1400.00	47.00	32.80	14.00	11.75
TCE2B48S21S	TM8Y120C20MP11	21.00	XAHC60G	1425.00	48.00	33.60	14.50	12.00
TCE2B48S21S	TM8Y120C20MP11	24.50	XAHD48F	1400.00	47.00	32.80	14.00	11.75
TCE2B48S21S	TM8Y120C20MP11	21.00	XAHD60G	1400.00	48.00	33.40	14.50	12.00
TCE2B48S21S	TM9E080C16MP12	21.00	CF/CM48C	1450.00	47.00	33.60	13.80	11.50
TCE2B48S21S	TM9E080C16MP12	24.50	CF/CM48D	1475.00	47.00	33.80	13.80	11.50
TCE2B48S21S	TM9E080C16MP12	21.00	CF/CM60C	1450.00	47.50	33.60	14.00	11.75
TCE2B48S21S	TM9E080C16MP12	24.50	CF/CM60D	1475.00	47.50	34.00	13.80	11.50
TCE2B48S21S	TM9E080C16MP12	21.00	XAF/XAUC48F	1425.00	47.00	33.20	14.00	11.50
TCE2B48S21S	TM9E080C16MP12	21.00	XAF/XAUC60G	1450.00	48.00	34.00	14.00	11.75
TCE2B48S21S	TM9E080C16MP12	24.50	XAF/XAUD60G	1450.00	47.50	33.60	14.00	11.75
TCE2B48S21S	TM9E080C16MP12	24.50	XAFD48F	1425.00	47.00	33.20	13.80	11.50
TCE2B48S21S	TM9E080C16MP12	21.00	XAHC48F	1425.00	47.00	33.20	14.00	11.50
TCE2B48S21S	TM9E080C16MP12	21.00	XAHC60G	1450.00	48.00	34.00	14.00	11.75
TCE2B48S21S	TM9E080C16MP12	24.50	XAHD48F	1425.00	47.00	33.20	14.00	11.50
TCE2B48S21S	TM9E080C16MP12	21.00	XAHD60G	1425.00	48.00	33.80	14.00	11.75
TCE2B48S21S	TM9E080C20MP12	21.00	CF/CM48C	1375.00	46.50	32.40	14.25	11.75
TCE2B48S21S	TM9E080C20MP12	24.50	CF/CM48D	1400.00	47.00	33.00	14.25	11.75
TCE2B48S21S	TM9E080C20MP12	21.00	CF/CM60C	1375.00	47.00	32.60	14.25	12.00
TCE2B48S21S	TM9E080C20MP12	24.50	CF/CM60D	1400.00	47.50	33.00	14.50	12.00
TCE2B48S21S	TM9E080C20MP12	21.00	XAF/XAUC48F	1350.00	46.50	32.00	14.00	11.75
TCE2B48S21S	TM9E080C20MP12	21.00	XAF/XAUC60G	1375.00	48.00	33.20	14.50	12.00
TCE2B48S21S	TM9E080C20MP12	24.50	XAF/XAUD60G	1375.00	47.00	32.60	14.50	12.00
TCE2B48S21S	TM9E080C20MP12	24.50	XAFD48F	1375.00	46.50	32.20	14.25	11.75
TCE2B48S21S	TM9E080C20MP12	21.00	XAHC48F	1350.00	46.50	32.00	14.00	11.75
TCE2B48S21S	TM9E080C20MP12	21.00	XAHC60G	1375.00	48.00	33.20	14.50	12.00
TCE2B48S21S	TM9E080C20MP12	24.50	XAHD48F	1350.00	46.50	32.00	14.00	11.75
TCE2B48S21S	TM9E080C20MP12	21.00	XAHD60G	1350.00	48.00	33.00	14.50	12.00
TCE2B48S21S	TM9E100C16MP12	21.00	CF/CM48C	1500.00	47.00	34.20	13.80	11.25
TCE2B48S21S	TM9E100C16MP12	24.50	CF/CM48D	1525.00	47.50	34.60	13.80	11.25
TCE2B48S21S	TM9E100C16MP12	21.00	CF/CM60C	1500.00	47.50	34.20	13.80	11.25
TCE2B48S21S	TM9E100C16MP12	24.50	CF/CM60D	1525.00	47.50	34.40	13.80	11.25
TCE2B48S21S	TM9E100C16MP12	21.00	XAF/XAUC48F	1475.00	47.00	33.80	13.80	11.25
TCE2B48S21S	TM9E100C16MP12	21.00	XAF/XAUC60G	1500.00	47.50	34.20	13.80	11.25
TCE2B48S21S	TM9E100C16MP12	24.50	XAF/XAUD60G	1500.00	47.50	34.20	13.80	11.25
TCE2B48S21S	TM9E100C16MP12	24.50	XAFD48F	1500.00	47.00	33.80	13.80	11.25
TCE2B48S21S	TM9E100C16MP12	21.00	XAHC48F	1475.00	47.00	33.80	13.80	11.25
TCE2B48S21S	TM9E100C16MP12	21.00	XAHC60G	1500.00	47.50	34.20	13.80	11.25
TCE2B48S21S	TM9E100C16MP12	24.50	XAHD48F	1475.00	47.00	33.60	13.80	11.25
TCE2B48S21S	TM9E100C16MP12	21.00	XAHD60G	1475.00	47.50	34.00	13.80	11.25
TCE2B48S21S	TM9E100C20MP12	21.00	CF/CM48C	1375.00	46.50	32.40	14.25	11.75
TCE2B48S21S	TM9E100C20MP12	24.50	CF/CM48D	1400.00	47.00	33.00	14.25	11.75
TCE2B48S21S	TM9E100C20MP12	21.00	CF/CM60C	1375.00	47.00	32.60	14.25	12.00
TCE2B48S21S	TM9E100C20MP12	24.50	CF/CM60D	1400.00	47.50	33.00	14.50	12.00
TCE2B48S21S	TM9E100C20MP12	21.00	XAF/XAUC48F	1350.00	46.50	32.00	14.00	11.75
TCE2B48S21S	TM9E100C20MP12	21.00	XAF/XAUC60G	1375.00	48.00	33.20	14.50	12.00
TCE2B48S21S	TM9E100C20MP12	24.50	XAF/XAUD60G	1375.00	47.00	32.40	14.50	12.00
TCE2B48S21S	TM9E100C20MP12	24.50	XAFD48F	1375.00	46.50	32.20	14.25	11.75

Table 13: Furnace capacity - 4 ton

Outdoor unit model	Furnace model	Furnace width (in.)	Indoor coil model	Rated CFM	Net cool (MBH)	Sens cool (MBH)	SEER2	EER2
TCE2B48S21S	TM9E100C20MP12	21.00	XAHC48F	1350.00	46.50	32.00	14.00	11.75
TCE2B48S21S	TM9E100C20MP12	21.00	XAHC60G	1375.00	48.00	33.20	14.50	12.00
TCE2B48S21S	TM9E100C20MP12	24.50	XAHD48F	1350.00	46.50	32.00	14.00	11.75
TCE2B48S21S	TM9E100C20MP12	21.00	XAHD60G	1350.00	48.00	33.00	14.50	12.00
TCE2B48S21S	TM9E120D20MP12	24.50	CF/CM48D	1325.00	46.50	32.00	14.25	12.00
TCE2B48S21S	TM9E120D20MP12	24.50	CF/CM60D	1325.00	47.00	32.20	14.50	12.00
TCE2B48S21S	TM9E120D20MP12	24.50	XAF/XAUD60G	1500.00	48.00	34.20	14.25	11.75
TCE2B48S21S	TM9E120D20MP12	24.50	XAFD48F	1475.00	47.00	33.40	14.00	11.50
TCE2B48S21S	TM9E120D20MP12	24.50	XAHD48F	1475.00	47.00	33.40	14.00	11.50
TCE2B48S21S	TM9E120D20MP12	21.00	XAHD60G	1475.00	48.00	34.20	14.00	11.75
TCE2B48S21S	TM9V080C16MP12C	21.00	CF/CM48C	1400.00	47.00	33.20	13.80	11.25
TCE2B48S21S	TM9V080C16MP12C	24.50	CF/CM48D	1375.00	46.00	32.40	13.80	11.50
TCE2B48S21S	TM9V080C16MP12C	21.00	CF/CM60C	1400.00	47.50	33.40	13.80	11.25
TCE2B48S21S	TM9V080C16MP12C	24.50	CF/CM60D	1375.00	46.50	32.40	14.00	11.75
TCE2B48S21S	TM9V080C16MP12C	21.00	XAF/XAUC48F	1400.00	46.50	32.80	13.80	11.25
TCE2B48S21S	TM9V080C16MP12C	21.00	XAF/XAUC60G	1400.00	47.50	33.40	13.80	11.25
TCE2B48S21S	TM9V080C16MP12C	24.50	XAF/XAUD60G	1400.00	47.50	33.20	13.80	11.25
TCE2B48S21S	TM9V080C16MP12C	24.50	XAFD48F	1400.00	46.50	32.60	13.80	11.25
TCE2B48S21S	TM9V080C16MP12C	21.00	XAHC48F	1400.00	46.50	32.80	13.80	11.25
TCE2B48S21S	TM9V080C16MP12C	21.00	XAHC60G	1400.00	48.00	33.60	14.00	11.75
TCE2B48S21S	TM9V080C16MP12C	24.50	XAHD48F	1400.00	46.50	32.60	13.80	11.25
TCE2B48S21S	TM9V080C16MP12C	21.00	XAHD60G	1400.00	47.50	33.40	13.80	11.25
TCE2B48S21S	TM9V100C16MP12C	21.00	CF/CM48C	1375.00	46.50	32.60	14.00	11.75
TCE2B48S21S	TM9V100C16MP12C	24.50	CF/CM48D	1350.00	46.50	32.20	14.25	11.75
TCE2B48S21S	TM9V100C16MP12C	21.00	CF/CM60C	1375.00	47.00	32.60	14.25	11.75
TCE2B48S21S	TM9V100C16MP12C	24.50	CF/CM60D	1350.00	47.00	32.40	14.25	12.00
TCE2B48S21S	TM9V100C16MP12C	21.00	XAF/XAUC48F	1325.00	46.00	31.60	14.00	11.75
TCE2B48S21S	TM9V100C16MP12C	21.00	XAF/XAUC60G	1375.00	48.00	33.20	14.25	12.00
TCE2B48S21S	TM9V100C16MP12C	24.50	XAF/XAUD60G	1375.00	47.00	32.60	14.25	12.00
TCE2B48S21S	TM9V100C16MP12C	24.50	XAFD48F	1325.00	46.00	31.60	14.00	11.75
TCE2B48S21S	TM9V100C16MP12C	21.00	XAHC48F	1325.00	46.00	31.60	14.00	11.75
TCE2B48S21S	TM9V100C16MP12C	21.00	XAHC60G	1350.00	48.00	33.00	14.25	12.00
TCE2B48S21S	TM9V100C16MP12C	24.50	XAHD48F	1325.00	46.00	31.60	14.00	11.75
TCE2B48S21S	TM9V100C16MP12C	21.00	XAHD60G	1325.00	47.50	32.60	14.25	12.00
TCE2B48S21S	TM9V100C20MP12C	21.00	CF/CM48C	1375.00	46.50	32.60	14.00	11.75
TCE2B48S21S	TM9V100C20MP12C	24.50	CF/CM48D	1375.00	46.50	32.40	14.00	11.75
TCE2B48S21S	TM9V100C20MP12C	21.00	CF/CM60C	1375.00	47.00	32.60	14.00	11.75
TCE2B48S21S	TM9V100C20MP12C	24.50	CF/CM60D	1375.00	47.00	32.60	14.25	11.75
TCE2B48S21S	TM9V100C20MP12C	21.00	XAF/XAUC48F	1325.00	46.00	31.60	14.00	11.75
TCE2B48S21S	TM9V100C20MP12C	21.00	XAF/XAUC60G	1375.00	48.00	33.40	14.25	11.75
TCE2B48S21S	TM9V100C20MP12C	24.50	XAF/XAUD60G	1375.00	47.00	32.60	14.25	11.75
TCE2B48S21S	TM9V100C20MP12C	24.50	XAFD48F	1375.00	46.50	32.40	14.00	11.75
TCE2B48S21S	TM9V100C20MP12C	21.00	XAHC48F	1375.00	46.00	32.00	14.00	11.50
TCE2B48S21S	TM9V100C20MP12C	21.00	XAHC60G	1375.00	48.00	33.20	14.25	11.75
TCE2B48S21S	TM9V100C20MP12C	24.50	XAHD48F	1375.00	46.00	32.00	14.00	11.50
TCE2B48S21S	TM9V100C20MP12C	21.00	XAHD60G	1375.00	47.50	33.00	14.25	11.75
TCE2B48S21S	TM9V120D20MP12C	24.50	CF/CM48D	1400.00	47.00	33.00	14.25	11.75
TCE2B48S21S	TM9V120D20MP12C	24.50	CF/CM60D	1400.00	47.50	33.00	14.50	12.00
TCE2B48S21S	TM9V120D20MP12C	24.50	XAF/XAUD60G	1400.00	48.00	33.40	14.50	12.00
TCE2B48S21S	TM9V120D20MP12C	24.50	XAFD48F	1400.00	47.00	32.80	14.00	11.75
TCE2B48S21S	TM9V120D20MP12C	24.50	XAHD48F	1400.00	47.00	32.80	14.00	11.75
TCE2B48S21S	TM9V120D20MP12C	21.00	XAHD60G	1400.00	48.00	33.40	14.50	12.00
TCE2B48S21S	TM9Y100C20MP11	21.00	CF/CM48C	1400.00	47.00	33.20	14.00	11.50
TCE2B48S21S	TM9Y100C20MP11	24.50	CF/CM48D	1425.00	47.00	33.40	14.00	11.75
TCE2B48S21S	TM9Y100C20MP11	21.00	CF/CM60C	1400.00	47.50	33.20	14.00	11.75
TCE2B48S21S	TM9Y100C20MP11	24.50	CF/CM60D	1450.00	47.50	33.60	14.00	11.75
TCE2B48S21S	TM9Y100C20MP11	21.00	XAF/XAUC48F	1375.00	46.00	32.00	14.00	11.50
TCE2B48S21S	TM9Y100C20MP11	21.00	XAF/XAUC60G	1400.00	48.00	33.60	14.00	11.75
TCE2B48S21S	TM9Y100C20MP11	24.50	XAF/XAUD60G	1400.00	47.50	33.20	14.00	11.75
TCE2B48S21S	TM9Y100C20MP11	24.50	XAFD48F	1400.00	47.00	33.00	14.00	11.50
TCE2B48S21S	TM9Y100C20MP11	21.00	XAHC48F	1375.00	46.00	32.00	14.00	11.50
TCE2B48S21S	TM9Y100C20MP11	21.00	XAHC60G	1400.00	48.00	33.60	14.00	11.75
TCE2B48S21S	TM9Y100C20MP11	24.50	XAHD48F	1375.00	46.00	32.00	14.00	11.50

Table 13: Furnace capacity - 4 ton

Outdoor unit model	Furnace model	Furnace width (in.)	Indoor coil model	Rated CFM	Net cool (MBH)	Sens cool (MBH)	SEER2	EER2
TCE2B48S21S	TM9Y100C20MP11	21.00	XAHD60G	1375.00	47.00	32.60	14.00	11.75
TCE2B48S21S	TM9Y120D20MP11	24.50	CF/CM48D	1475.00	47.50	34.00	14.00	11.75
TCE2B48S21S	TM9Y120D20MP11	24.50	CF/CM60D	1475.00	48.00	34.00	14.25	11.75
TCE2B48S21S	TM9Y120D20MP11	24.50	XAF/XAUD60G	1450.00	48.00	33.80	14.25	11.75
TCE2B48S21S	TM9Y120D20MP11	24.50	XAFD48F	1450.00	47.00	33.20	14.00	11.75
TCE2B48S21S	TM9Y120D20MP11	24.50	XAHD48F	1450.00	47.00	33.20	14.00	11.75
TCE2B48S21S	TM9Y120D20MP11	21.00	XAHD60G	1425.00	48.00	33.80	14.25	11.75
TCE2B48S21S	TMLE080C16MP11	21.00	CF/CM48C	1475.00	47.00	33.80	14.00	11.50
TCE2B48S21S	TMLE080C16MP11	24.50	CF/CM48D	1500.00	47.50	34.40	14.00	11.50
TCE2B48S21S	TMLE080C16MP11	21.00	CF/CM60C	1475.00	47.50	33.80	14.00	11.75
TCE2B48S21S	TMLE080C16MP11	24.50	CF/CM60D	1500.00	47.50	34.00	14.00	11.75
TCE2B48S21S	TMLE080C16MP11	21.00	XAF/XAUC48F	1450.00	47.00	33.40	13.80	11.50
TCE2B48S21S	TMLE080C16MP11	21.00	XAF/XAUC60G	1475.00	48.00	34.20	14.00	11.75
TCE2B48S21S	TMLE080C16MP11	24.50	XAF/XAUD60G	1475.00	47.50	33.80	14.00	11.75
TCE2B48S21S	TMLE080C16MP11	24.50	XAFD48F	1475.00	47.00	33.60	14.00	11.50
TCE2B48S21S	TMLE080C16MP11	21.00	XAHC48F	1450.00	47.00	33.40	13.80	11.50
TCE2B48S21S	TMLE080C16MP11	21.00	XAHC60G	1475.00	47.50	33.80	14.00	11.75
TCE2B48S21S	TMLE080C16MP11	24.50	XAHD48F	1450.00	47.00	33.40	13.80	11.50
TCE2B48S21S	TMLE080C16MP11	21.00	XAHD60G	1450.00	48.00	34.00	14.00	11.75
TCE2B48S21S	TMLE080C20MP11	21.00	CF/CM48C	1325.00	46.50	32.00	14.50	12.00
TCE2B48S21S	TMLE080C20MP11	24.50	CF/CM48D	1325.00	46.50	32.00	14.50	12.00
TCE2B48S21S	TMLE080C20MP11	21.00	CF/CM60C	1425.00	47.50	33.20	14.25	12.00
TCE2B48S21S	TMLE080C20MP11	24.50	CF/CM60D	1350.00	47.00	32.20	14.50	12.00
TCE2B48S21S	TMLE080C20MP11	21.00	XAF/XAUC48F	1400.00	47.00	32.80	14.00	11.75
TCE2B48S21S	TMLE080C20MP11	21.00	XAF/XAUC60G	1425.00	48.00	33.60	14.50	12.00
TCE2B48S21S	TMLE080C20MP11	24.50	XAF/XAUD60G	1425.00	47.50	33.20	14.50	12.00
TCE2B48S21S	TMLE080C20MP11	24.50	XAFD48F	1425.00	47.00	33.00	14.00	11.75
TCE2B48S21S	TMLE080C20MP11	21.00	XAHC48F	1400.00	47.00	32.80	14.00	11.75
TCE2B48S21S	TMLE080C20MP11	21.00	XAHC60G	1325.00	48.00	32.80	14.75	12.25
TCE2B48S21S	TMLE080C20MP11	24.50	XAHD48F	1400.00	47.00	32.80	14.00	11.75
TCE2B48S21S	TMLE080C20MP11	21.00	XAHD60G	1400.00	48.00	33.40	14.50	12.00
TCE2B48S21S	TMLE100C16MP11	21.00	CF/CM48C	1475.00	47.00	33.80	14.00	11.50
TCE2B48S21S	TMLE100C16MP11	24.50	CF/CM48D	1500.00	47.50	34.40	14.00	11.75
TCE2B48S21S	TMLE100C16MP11	21.00	CF/CM60C	1475.00	47.50	33.80	14.00	11.75
TCE2B48S21S	TMLE100C16MP11	24.50	CF/CM60D	1500.00	47.50	34.00	14.00	11.75
TCE2B48S21S	TMLE100C16MP11	21.00	XAF/XAUC48F	1450.00	47.00	33.40	13.80	11.50
TCE2B48S21S	TMLE100C16MP11	21.00	XAF/XAUC60G	1475.00	47.50	33.80	14.00	11.75
TCE2B48S21S	TMLE100C16MP11	24.50	XAF/XAUD60G	1475.00	47.50	33.80	14.00	11.75
TCE2B48S21S	TMLE100C16MP11	24.50	XAFD48F	1450.00	47.00	33.40	13.80	11.50
TCE2B48S21S	TMLE100C16MP11	21.00	XAHC48F	1450.00	47.00	33.40	13.80	11.50
TCE2B48S21S	TMLE100C16MP11	21.00	XAHC60G	1475.00	47.50	33.80	14.00	11.75
TCE2B48S21S	TMLE100C16MP11	24.50	XAHD48F	1450.00	47.00	33.40	13.80	11.50
TCE2B48S21S	TMLE100C16MP11	21.00	XAHD60G	1450.00	48.00	34.00	14.00	11.75
TCE2B48S21S	TMLE100C20MP11	21.00	CF/CM48C	1400.00	47.00	33.00	14.25	11.75
TCE2B48S21S	TMLE100C20MP11	24.50	CF/CM48D	1325.00	46.50	32.00	14.50	12.00
TCE2B48S21S	TMLE100C20MP11	21.00	CF/CM60C	1400.00	47.50	33.00	14.25	12.00
TCE2B48S21S	TMLE100C20MP11	24.50	CF/CM60D	1325.00	47.00	32.00	14.50	12.00
TCE2B48S21S	TMLE100C20MP11	21.00	XAF/XAUC48F	1375.00	46.50	32.20	14.00	11.75
TCE2B48S21S	TMLE100C20MP11	21.00	XAF/XAUC60G	1400.00	48.00	33.40	14.50	12.00
TCE2B48S21S	TMLE100C20MP11	24.50	XAF/XAUD60G	1400.00	47.50	33.00	14.50	12.00
TCE2B48S21S	TMLE100C20MP11	24.50	XAFD48F	1375.00	46.50	32.20	14.00	11.75
TCE2B48S21S	TMLE100C20MP11	21.00	XAHC48F	1375.00	46.50	32.20	14.00	11.75
TCE2B48S21S	TMLE100C20MP11	21.00	XAHC60G	1400.00	48.00	33.40	14.50	12.00
TCE2B48S21S	TMLE100C20MP11	24.50	XAHD48F	1375.00	46.50	32.20	14.00	11.75
TCE2B48S21S	TMLE100C20MP11	21.00	XAHD60G	1375.00	48.00	33.20	14.50	12.00
TCE2B48S21S	TMLE120C16MP11	21.00	CF/CM48C	1475.00	47.00	33.80	14.00	11.50
TCE2B48S21S	TMLE120C16MP11	24.50	CF/CM48D	1500.00	47.50	34.40	14.00	11.75
TCE2B48S21S	TMLE120C16MP11	21.00	CF/CM60C	1475.00	47.50	33.80	14.00	11.75
TCE2B48S21S	TMLE120C16MP11	24.50	CF/CM60D	1500.00	47.50	34.00	14.00	11.75
TCE2B48S21S	TMLE120C16MP11	21.00	XAF/XAUC48F	1450.00	47.00	33.40	13.80	11.50
TCE2B48S21S	TMLE120C16MP11	21.00	XAF/XAUC60G	1475.00	47.50	33.80	14.00	11.75
TCE2B48S21S	TMLE120C16MP11	24.50	XAF/XAUD60G	1475.00	47.50	33.80	14.00	11.75
TCE2B48S21S	TMLE120C16MP11	24.50	XAFD48F	1475.00	47.00	33.60	14.00	11.50

Table 13: Furnace capacity - 4 ton

Outdoor unit model	Furnace model	Furnace width (in.)	Indoor coil model	Rated CFM	Net cool (MBH)	Sens cool (MBH)	SEER2	EER2
TCE2B48S21S	TMLE120C16MP11	21.00	XAHC48F	1450.00	47.00	33.40	13.80	11.50
TCE2B48S21S	TMLE120C16MP11	21.00	XAHC60G	1475.00	48.00	34.20	14.00	11.75
TCE2B48S21S	TMLE120C16MP11	24.50	XAHD48F	1475.00	47.00	33.60	14.00	11.50
TCE2B48S21S	TMLE120C16MP11	21.00	XAHD60G	1450.00	48.00	34.00	14.00	11.75
TCE2B48S21S	TMLE120C20MP11	21.00	CF/CM48C	1375.00	46.50	32.40	14.25	11.75
TCE2B48S21S	TMLE120C20MP11	24.50	CF/CM48D	1325.00	46.50	32.00	14.50	12.00
TCE2B48S21S	TMLE120C20MP11	21.00	CF/CM60C	1375.00	47.00	32.60	14.50	12.00
TCE2B48S21S	TMLE120C20MP11	24.50	CF/CM60D	1325.00	47.00	32.00	14.50	12.00
TCE2B48S21S	TMLE120C20MP11	21.00	XAF/XAUC48F	1350.00	46.50	32.00	14.25	11.75
TCE2B48S21S	TMLE120C20MP11	21.00	XAF/XAUC60G	1375.00	48.00	33.20	14.50	12.00
TCE2B48S21S	TMLE120C20MP11	24.50	XAF/XAUD60G	1375.00	47.00	32.40	14.50	12.00
TCE2B48S21S	TMLE120C20MP11	24.50	XAFD48F	1375.00	46.50	32.20	14.25	11.75
TCE2B48S21S	TMLE120C20MP11	21.00	XAHC48F	1375.00	46.50	32.20	14.25	11.75
TCE2B48S21S	TMLE120C20MP11	21.00	XAHC60G	1400.00	48.00	33.40	14.50	12.00
TCE2B48S21S	TMLE120C20MP11	24.50	XAHD48F	1375.00	46.50	32.20	14.25	11.75
TCE2B48S21S	TMLE120C20MP11	21.00	XAHD60G	1375.00	48.00	33.20	14.50	12.00
TCE2B48S21S	TMLE130D20MP11	24.50	CF/CM48D	1525.00	47.50	34.40	14.25	11.75
TCE2B48S21S	TMLE130D20MP11	24.50	CF/CM60D	1525.00	48.00	34.40	14.25	11.75
TCE2B48S21S	TMLE130D20MP11	24.50	XAF/XAUD60G	1500.00	48.00	34.20	14.25	12.00
TCE2B48S21S	TMLE130D20MP11	24.50	XAFD48F	1500.00	47.50	34.00	14.00	11.75
TCE2B48S21S	TMLE130D20MP11	24.50	XAHD48F	1475.00	47.00	33.40	14.00	11.75
TCE2B48S21S	TMLE130D20MP11	21.00	XAHD60G	1475.00	48.00	34.00	14.25	11.75
TCE2B48S21S	TMLV100C16MP12C	21.00	CF/CM48C	1400.00	47.00	33.20	14.00	11.75
TCE2B48S21S	TMLV100C16MP12C	24.50	CF/CM48D	1375.00	46.50	32.60	14.00	11.75
TCE2B48S21S	TMLV100C16MP12C	21.00	CF/CM60C	1400.00	47.50	33.20	14.00	11.75
TCE2B48S21S	TMLV100C16MP12C	24.50	CF/CM60D	1375.00	47.00	32.60	14.25	11.75
TCE2B48S21S	TMLV100C16MP12C	21.00	XAF/XAUC48F	1400.00	47.00	33.00	14.00	11.50
TCE2B48S21S	TMLV100C16MP12C	21.00	XAF/XAUC60G	1400.00	48.00	33.60	14.25	11.75
TCE2B48S21S	TMLV100C16MP12C	24.50	XAF/XAUD60G	1400.00	47.50	33.20	14.25	11.75
TCE2B48S21S	TMLV100C16MP12C	24.50	XAFD48F	1400.00	47.00	33.00	14.00	11.50
TCE2B48S21S	TMLV100C16MP12C	21.00	XAHC48F	1400.00	47.00	33.00	14.00	11.50
TCE2B48S21S	TMLV100C16MP12C	21.00	XAHC60G	1400.00	48.00	33.60	14.25	11.75
TCE2B48S21S	TMLV100C16MP12C	24.50	XAHD48F	1400.00	47.00	33.00	14.00	11.50
TCE2B48S21S	TMLV100C16MP12C	21.00	XAHD60G	1400.00	48.00	33.60	14.00	11.75
TCE2B48S21S	TMLV120C20MP12C	21.00	CF/CM48C	1325.00	46.50	32.00	14.25	11.75
TCE2B48S21S	TMLV120C20MP12C	24.50	CF/CM48D	1325.00	46.50	32.00	14.25	12.00
TCE2B48S21S	TMLV120C20MP12C	21.00	CF/CM60C	1325.00	47.00	32.20	14.25	12.00
TCE2B48S21S	TMLV120C20MP12C	24.50	CF/CM60D	1400.00	47.50	33.00	14.50	12.00
TCE2B48S21S	TMLV120C20MP12C	21.00	XAF/XAUC48F	1375.00	46.50	32.20	14.00	11.75
TCE2B48S21S	TMLV120C20MP12C	21.00	XAF/XAUC60G	1325.00	48.00	32.80	14.50	12.00
TCE2B48S21S	TMLV120C20MP12C	24.50	XAF/XAUD60G	1425.00	47.50	33.20	14.50	12.00
TCE2B48S21S	TMLV120C20MP12C	24.50	XAFD48F	1325.00	46.00	31.60	14.25	11.75
TCE2B48S21S	TMLV120C20MP12C	21.00	XAHC48F	1325.00	46.00	31.60	14.25	11.75
TCE2B48S21S	TMLV120C20MP12C	21.00	XAHC60G	1325.00	48.00	32.80	14.50	12.00
TCE2B48S21S	TMLV120C20MP12C	24.50	XAHD48F	1325.00	46.00	31.60	14.25	11.75
TCE2B48S21S	TMLV120C20MP12C	21.00	XAHD60G	1325.00	47.50	32.40	14.50	12.00
TCE2B48S21S	TP9C080C16MP13C	21.00	CF/CM48C	1400.00	47.00	33.20	13.80	11.25
TCE2B48S21S	TP9C080C16MP13C	24.50	CF/CM48D	1375.00	46.00	32.40	13.80	11.50
TCE2B48S21S	TP9C080C16MP13C	21.00	CF/CM60C	1400.00	47.50	33.40	13.80	11.25
TCE2B48S21S	TP9C080C16MP13C	24.50	CF/CM60D	1375.00	46.50	32.40	14.00	11.75
TCE2B48S21S	TP9C080C16MP13C	21.00	XAF/XAUC48F	1400.00	46.50	32.80	13.80	11.25
TCE2B48S21S	TP9C080C16MP13C	21.00	XAF/XAUC60G	1400.00	47.50	33.40	13.80	11.25
TCE2B48S21S	TP9C080C16MP13C	24.50	XAF/XAUD60G	1400.00	47.50	33.20	13.80	11.25
TCE2B48S21S	TP9C080C16MP13C	24.50	XAFD48F	1400.00	46.50	32.60	13.80	11.25
TCE2B48S21S	TP9C080C16MP13C	21.00	XAHC48F	1400.00	46.50	32.80	13.80	11.25
TCE2B48S21S	TP9C080C16MP13C	21.00	XAHC60G	1400.00	48.00	33.60	14.00	11.75
TCE2B48S21S	TP9C080C16MP13C	24.50	XAHD48F	1400.00	46.50	32.60	13.80	11.25
TCE2B48S21S	TP9C080C16MP13C	21.00	XAHD60G	1400.00	47.50	33.40	13.80	11.25
TCE2B48S21S	TP9C100C16MP13C	21.00	CF/CM48C	1375.00	46.50	32.60	14.00	11.75
TCE2B48S21S	TP9C100C16MP13C	24.50	CF/CM48D	1350.00	46.50	32.20	14.25	11.75
TCE2B48S21S	TP9C100C16MP13C	21.00	CF/CM60C	1375.00	47.00	32.60	14.25	11.75
TCE2B48S21S	TP9C100C16MP13C	24.50	CF/CM60D	1350.00	47.00	32.40	14.25	12.00
TCE2B48S21S	TP9C100C16MP13C	21.00	XAF/XAUC48F	1325.00	46.00	31.60	14.00	11.75

Table 13: Furnace capacity - 4 ton

Outdoor unit model	Furnace model	Furnace width (in.)	Indoor coil model	Rated CFM	Net cool (MBH)	Sens cool (MBH)	SEER2	EER2
TCE2B48S21S	TP9C100C16MP13C	21.00	XAF/XAUC60G	1375.00	48.00	33.20	14.25	12.00
TCE2B48S21S	TP9C100C16MP13C	24.50	XAF/XAUD60G	1375.00	47.00	32.60	14.25	12.00
TCE2B48S21S	TP9C100C16MP13C	24.50	XAFD48F	1325.00	46.00	31.60	14.00	11.75
TCE2B48S21S	TP9C100C16MP13C	21.00	XAHC48F	1325.00	46.00	31.60	14.00	11.75
TCE2B48S21S	TP9C100C16MP13C	21.00	XAHC60G	1350.00	48.00	33.00	14.25	12.00
TCE2B48S21S	TP9C100C16MP13C	24.50	XAHD48F	1325.00	46.00	31.60	14.00	11.75
TCE2B48S21S	TP9C100C16MP13C	21.00	XAHD60G	1325.00	47.50	32.60	14.25	12.00
TCE2B48S21S	TP9C100C20MP13C	21.00	CF/CM48C	1375.00	46.50	32.60	14.00	11.75
TCE2B48S21S	TP9C100C20MP13C	24.50	CF/CM48D	1375.00	46.50	32.40	14.00	11.75
TCE2B48S21S	TP9C100C20MP13C	21.00	CF/CM60C	1375.00	47.00	32.60	14.00	11.75
TCE2B48S21S	TP9C100C20MP13C	24.50	CF/CM60D	1375.00	47.00	32.60	14.25	11.75
TCE2B48S21S	TP9C100C20MP13C	21.00	XAF/XAUC48F	1325.00	46.00	31.60	14.00	11.75
TCE2B48S21S	TP9C100C20MP13C	21.00	XAF/XAUC60G	1375.00	48.00	33.40	14.25	11.75
TCE2B48S21S	TP9C100C20MP13C	24.50	XAF/XAUD60G	1375.00	47.00	32.60	14.25	11.75
TCE2B48S21S	TP9C100C20MP13C	24.50	XAFD48F	1375.00	46.50	32.40	14.00	11.75
TCE2B48S21S	TP9C100C20MP13C	21.00	XAHC48F	1375.00	46.00	32.00	14.00	11.50
TCE2B48S21S	TP9C100C20MP13C	21.00	XAHC60G	1375.00	48.00	33.20	14.25	11.75
TCE2B48S21S	TP9C100C20MP13C	24.50	XAHD48F	1375.00	46.00	32.00	14.00	11.50
TCE2B48S21S	TP9C100C20MP13C	21.00	XAHD60G	1375.00	47.50	33.00	14.25	11.75
TCE2B48S21S	TP9C120D20MP13C	24.50	CF/CM48D	1400.00	47.00	33.00	14.25	11.75
TCE2B48S21S	TP9C120D20MP13C	24.50	CF/CM60D	1400.00	47.50	33.00	14.50	12.00
TCE2B48S21S	TP9C120D20MP13C	24.50	XAF/XAUD60G	1400.00	48.00	33.40	14.50	12.00
TCE2B48S21S	TP9C120D20MP13C	24.50	XAFD48F	1400.00	47.00	32.80	14.00	11.75
TCE2B48S21S	TP9C120D20MP13C	24.50	XAHD48F	1400.00	47.00	32.80	14.00	11.75
TCE2B48S21S	TP9C120D20MP13C	21.00	XAHD60G	1400.00	48.00	33.40	14.50	12.00
TCE2B48S21S	TPLC080C16MP13C	21.00	CF/CM48C	1400.00	47.00	33.20	14.00	11.75
TCE2B48S21S	TPLC080C16MP13C	24.50	CF/CM48D	1375.00	46.50	32.60	14.00	11.75
TCE2B48S21S	TPLC080C16MP13C	21.00	CF/CM60C	1400.00	47.50	33.20	14.00	11.75
TCE2B48S21S	TPLC080C16MP13C	24.50	CF/CM60D	1375.00	47.00	32.60	14.25	11.75
TCE2B48S21S	TPLC080C16MP13C	21.00	XAF/XAUC48F	1400.00	47.00	33.00	14.00	11.50
TCE2B48S21S	TPLC080C16MP13C	21.00	XAF/XAUC60G	1400.00	48.00	33.60	14.25	11.75
TCE2B48S21S	TPLC080C16MP13C	24.50	XAF/XAUD60G	1400.00	47.50	33.20	14.25	11.75
TCE2B48S21S	TPLC080C16MP13C	24.50	XAFD48F	1400.00	47.00	33.00	14.00	11.50
TCE2B48S21S	TPLC080C16MP13C	21.00	XAHC48F	1400.00	47.00	33.00	14.00	11.50
TCE2B48S21S	TPLC080C16MP13C	21.00	XAHC60G	1400.00	48.00	33.60	14.25	11.75
TCE2B48S21S	TPLC080C16MP13C	24.50	XAHD48F	1400.00	47.00	33.00	14.00	11.50
TCE2B48S21S	TPLC080C16MP13C	21.00	XAHD60G	1400.00	48.00	33.60	14.00	11.75
TCE2B48S21S	TPLC100C16MP13C	21.00	CF/CM48C	1400.00	47.00	33.20	14.00	11.75
TCE2B48S21S	TPLC100C16MP13C	24.50	CF/CM48D	1375.00	46.50	32.60	14.00	11.75
TCE2B48S21S	TPLC100C16MP13C	21.00	CF/CM60C	1400.00	47.50	33.20	14.00	11.75
TCE2B48S21S	TPLC100C16MP13C	24.50	CF/CM60D	1375.00	47.00	32.60	14.25	11.75
TCE2B48S21S	TPLC100C16MP13C	21.00	XAF/XAUC48F	1400.00	47.00	33.00	14.00	11.50
TCE2B48S21S	TPLC100C16MP13C	21.00	XAF/XAUC60G	1400.00	48.00	33.60	14.25	11.75
TCE2B48S21S	TPLC100C16MP13C	24.50	XAF/XAUD60G	1400.00	47.50	33.20	14.25	11.75
TCE2B48S21S	TPLC100C16MP13C	24.50	XAFD48F	1400.00	47.00	33.00	14.00	11.50
TCE2B48S21S	TPLC100C16MP13C	21.00	XAHC48F	1400.00	47.00	33.00	14.00	11.50
TCE2B48S21S	TPLC100C16MP13C	21.00	XAHC60G	1400.00	48.00	33.60	14.25	11.75
TCE2B48S21S	TPLC100C16MP13C	24.50	XAHD48F	1400.00	47.00	33.00	14.00	11.50
TCE2B48S21S	TPLC100C16MP13C	21.00	XAHD60G	1400.00	48.00	33.60	14.00	11.75
TCE2B48S21S	TPLC100C20MP13C	21.00	CF/CM48C	1325.00	46.50	32.00	14.25	11.75
TCE2B48S21S	TPLC100C20MP13C	24.50	CF/CM48D	1325.00	46.50	32.00	14.25	12.00
TCE2B48S21S	TPLC100C20MP13C	21.00	CF/CM60C	1325.00	47.00	32.20	14.25	12.00
TCE2B48S21S	TPLC100C20MP13C	24.50	CF/CM60D	1400.00	47.50	33.00	14.50	12.00
TCE2B48S21S	TPLC100C20MP13C	21.00	XAF/XAUC48F	1375.00	46.50	32.20	14.00	11.75
TCE2B48S21S	TPLC100C20MP13C	21.00	XAF/XAUC60G	1325.00	48.00	32.80	14.50	12.00
TCE2B48S21S	TPLC100C20MP13C	24.50	XAF/XAUD60G	1425.00	47.50	33.20	14.50	12.00
TCE2B48S21S	TPLC100C20MP13C	24.50	XAFD48F	1325.00	46.00	31.60	14.25	11.75
TCE2B48S21S	TPLC100C20MP13C	21.00	XAHC48F	1325.00	46.00	31.60	14.25	11.75
TCE2B48S21S	TPLC100C20MP13C	21.00	XAHC60G	1325.00	48.00	32.80	14.50	12.00
TCE2B48S21S	TPLC100C20MP13C	24.50	XAHD48F	1325.00	46.00	31.60	14.25	11.75
TCE2B48S21S	TPLC100C20MP13C	21.00	XAHD60G	1325.00	47.50	32.40	14.50	12.00
TCE2B48S21S	TPLC120C20MP13C	21.00	CF/CM48C	1325.00	46.50	32.00	14.25	11.75
TCE2B48S21S	TPLC120C20MP13C	24.50	CF/CM48D	1325.00	46.50	32.00	14.25	12.00

Table 13: Furnace capacity - 4 ton

Outdoor unit model	Furnace model	Furnace width (in.)	Indoor coil model	Rated CFM	Net cool (MBH)	Sens cool (MBH)	SEER2	EER2
TCE2B48S21S	TPLC120C20MP13C	21.00	CF/CM60C	1325.00	47.00	32.20	14.25	12.00
TCE2B48S21S	TPLC120C20MP13C	24.50	CF/CM60D	1400.00	47.50	33.00	14.50	12.00
TCE2B48S21S	TPLC120C20MP13C	21.00	XAF/XAUC48F	1375.00	46.50	32.20	14.00	11.75
TCE2B48S21S	TPLC120C20MP13C	21.00	XAF/XAUC60G	1325.00	48.00	32.80	14.50	12.00
TCE2B48S21S	TPLC120C20MP13C	24.50	XAF/XAUD60G	1425.00	47.50	33.20	14.50	12.00
TCE2B48S21S	TPLC120C20MP13C	24.50	XAFD48F	1325.00	46.00	31.60	14.25	11.75
TCE2B48S21S	TPLC120C20MP13C	21.00	XAHC48F	1325.00	46.00	31.60	14.25	11.75
TCE2B48S21S	TPLC120C20MP13C	21.00	XAHC60G	1325.00	48.00	32.80	14.50	12.00
TCE2B48S21S	TPLC120C20MP13C	24.50	XAHD48F	1325.00	46.00	31.60	14.25	11.75
TCE2B48S21S	TPLC120C20MP13C	21.00	XAHD60G	1325.00	47.50	32.40	14.50	12.00
TCE2B48S21S	CP9C080C16MP13C	21.00	CF/CM48C	1400.00	47.00	33.20	13.80	11.25
TCE2B48S21S	CP9C080C16MP13C	24.50	CF/CM48D	1375.00	46.00	32.40	13.80	11.50
TCE2B48S21S	CP9C080C16MP13C	21.00	CF/CM60C	1400.00	47.50	33.40	13.80	11.25
TCE2B48S21S	CP9C080C16MP13C	24.50	CF/CM60D	1375.00	46.50	32.40	14.00	11.75
TCE2B48S21S	CP9C080C16MP13C	21.00	XAF/XAUC48F	1400.00	46.50	32.80	13.80	11.25
TCE2B48S21S	CP9C080C16MP13C	21.00	XAF/XAUC60G	1400.00	47.50	33.40	13.80	11.25
TCE2B48S21S	CP9C080C16MP13C	24.50	XAF/XAUD60G	1400.00	47.50	33.20	13.80	11.25
TCE2B48S21S	CP9C080C16MP13C	24.50	XAFD48F	1400.00	46.50	32.60	13.80	11.25
TCE2B48S21S	CP9C080C16MP13C	21.00	XAHC48F	1400.00	46.50	32.80	13.80	11.25
TCE2B48S21S	CP9C080C16MP13C	21.00	XAHC60G	1400.00	48.00	33.60	14.00	11.75
TCE2B48S21S	CP9C080C16MP13C	24.50	XAHD48F	1400.00	46.50	32.60	13.80	11.25
TCE2B48S21S	CP9C080C16MP13C	21.00	XAHD60G	1400.00	47.50	33.40	13.80	11.25
TCE2B48S21S	CP9C100C16MP13C	21.00	CF/CM48C	1375.00	46.50	32.60	14.00	11.75
TCE2B48S21S	CP9C100C16MP13C	24.50	CF/CM48D	1350.00	46.50	32.20	14.25	11.75
TCE2B48S21S	CP9C100C16MP13C	21.00	CF/CM60C	1375.00	47.00	32.60	14.25	11.75
TCE2B48S21S	CP9C100C16MP13C	24.50	CF/CM60D	1350.00	47.00	32.40	14.25	12.00
TCE2B48S21S	CP9C100C16MP13C	21.00	XAF/XAUC48F	1325.00	46.00	31.60	14.00	11.75
TCE2B48S21S	CP9C100C16MP13C	21.00	XAF/XAUC60G	1375.00	48.00	33.20	14.25	12.00
TCE2B48S21S	CP9C100C16MP13C	24.50	XAF/XAUD60G	1375.00	47.00	32.60	14.25	12.00
TCE2B48S21S	CP9C100C16MP13C	24.50	XAFD48F	1325.00	46.00	31.60	14.00	11.75
TCE2B48S21S	CP9C100C16MP13C	21.00	XAHC48F	1325.00	46.00	31.60	14.00	11.75
TCE2B48S21S	CP9C100C16MP13C	21.00	XAHC60G	1350.00	48.00	33.00	14.25	12.00
TCE2B48S21S	CP9C100C16MP13C	24.50	XAHD48F	1325.00	46.00	31.60	14.00	11.75
TCE2B48S21S	CP9C100C16MP13C	21.00	XAHD60G	1325.00	47.50	32.60	14.25	12.00
TCE2B48S21S	CP9C100C20MP13C	21.00	CF/CM48C	1375.00	46.50	32.60	14.00	11.75
TCE2B48S21S	CP9C100C20MP13C	24.50	CF/CM48D	1375.00	46.50	32.40	14.00	11.75
TCE2B48S21S	CP9C100C20MP13C	21.00	CF/CM60C	1375.00	47.00	32.60	14.00	11.75
TCE2B48S21S	CP9C100C20MP13C	24.50	CF/CM60D	1375.00	47.00	32.60	14.25	11.75
TCE2B48S21S	CP9C100C20MP13C	21.00	XAF/XAUC48F	1325.00	46.00	31.60	14.00	11.75
TCE2B48S21S	CP9C100C20MP13C	21.00	XAF/XAUC60G	1375.00	48.00	33.40	14.25	11.75
TCE2B48S21S	CP9C100C20MP13C	24.50	XAF/XAUD60G	1375.00	47.00	32.60	14.25	11.75
TCE2B48S21S	CP9C100C20MP13C	24.50	XAFD48F	1375.00	46.50	32.40	14.00	11.75
TCE2B48S21S	CP9C100C20MP13C	21.00	XAHC48F	1375.00	46.00	32.00	14.00	11.50
TCE2B48S21S	CP9C100C20MP13C	21.00	XAHC60G	1375.00	48.00	33.20	14.25	11.75
TCE2B48S21S	CP9C100C20MP13C	24.50	XAHD48F	1375.00	46.00	32.00	14.00	11.50
TCE2B48S21S	CP9C100C20MP13C	21.00	XAHD60G	1375.00	47.50	33.00	14.25	11.75
TCE2B48S21S	CP9C120D20MP13C	24.50	CF/CM48D	1400.00	47.00	33.00	14.25	11.75
TCE2B48S21S	CP9C120D20MP13C	24.50	CF/CM60D	1400.00	47.50	33.00	14.50	12.00
TCE2B48S21S	CP9C120D20MP13C	24.50	XAF/XAUD60G	1400.00	48.00	33.40	14.50	12.00
TCE2B48S21S	CP9C120D20MP13C	24.50	XAFD48F	1400.00	47.00	32.80	14.00	11.75
TCE2B48S21S	CP9C120D20MP13C	24.50	XAHD48F	1400.00	47.00	32.80	14.00	11.75
TCE2B48S21S	CP9C120D20MP13C	21.00	XAHD60G	1400.00	48.00	33.40	14.50	12.00
TCE2B48S21S	CPLC080C16MP13C	21.00	CF/CM48C	1400.00	47.00	33.20	14.00	11.75
TCE2B48S21S	CPLC080C16MP13C	24.50	CF/CM48D	1375.00	46.50	32.60	14.00	11.75
TCE2B48S21S	CPLC080C16MP13C	21.00	CF/CM60C	1400.00	47.50	33.20	14.00	11.75
TCE2B48S21S	CPLC080C16MP13C	24.50	CF/CM60D	1375.00	47.00	32.60	14.25	11.75
TCE2B48S21S	CPLC080C16MP13C	21.00	XAF/XAUC48F	1400.00	47.00	33.00	14.00	11.50
TCE2B48S21S	CPLC080C16MP13C	21.00	XAF/XAUC60G	1400.00	48.00	33.60	14.25	11.75
TCE2B48S21S	CPLC080C16MP13C	24.50	XAF/XAUD60G	1400.00	47.50	33.20	14.25	11.75
TCE2B48S21S	CPLC080C16MP13C	24.50	XAFD48F	1400.00	47.00	33.00	14.00	11.50
TCE2B48S21S	CPLC080C16MP13C	21.00	XAHC48F	1400.00	47.00	33.00	14.00	11.50
TCE2B48S21S	CPLC080C16MP13C	21.00	XAHC60G	1400.00	48.00	33.60	14.25	11.75
TCE2B48S21S	CPLC080C16MP13C	24.50	XAHD48F	1400.00	47.00	33.00	14.00	11.50

Table 13: Furnace capacity - 4 ton

Outdoor unit model	Furnace model	Furnace width (in.)	Indoor coil model	Rated CFM	Net cool (MBH)	Sens cool (MBH)	SEER2	EER2
TCE2B48S21S	CPLC080C16MP13C	21.00	XAHD60G	1400.00	48.00	33.60	14.00	11.75
TCE2B48S21S	CPLC100C16MP13C	21.00	CF/CM48C	1400.00	47.00	33.20	14.00	11.75
TCE2B48S21S	CPLC100C16MP13C	24.50	CF/CM48D	1375.00	46.50	32.60	14.00	11.75
TCE2B48S21S	CPLC100C16MP13C	21.00	CF/CM60C	1400.00	47.50	33.20	14.00	11.75
TCE2B48S21S	CPLC100C16MP13C	24.50	CF/CM60D	1375.00	47.00	32.60	14.25	11.75
TCE2B48S21S	CPLC100C16MP13C	21.00	XAF/XAUC48F	1400.00	47.00	33.00	14.00	11.50
TCE2B48S21S	CPLC100C16MP13C	21.00	XAF/XAUC60G	1400.00	48.00	33.60	14.25	11.75
TCE2B48S21S	CPLC100C16MP13C	24.50	XAF/XAUD60G	1400.00	47.50	33.20	14.25	11.75
TCE2B48S21S	CPLC100C16MP13C	24.50	XAFD48F	1400.00	47.00	33.00	14.00	11.50
TCE2B48S21S	CPLC100C16MP13C	21.00	XAHC48F	1400.00	47.00	33.00	14.00	11.50
TCE2B48S21S	CPLC100C16MP13C	21.00	XAHC60G	1400.00	48.00	33.60	14.25	11.75
TCE2B48S21S	CPLC100C16MP13C	24.50	XAHD48F	1400.00	47.00	33.00	14.00	11.50
TCE2B48S21S	CPLC100C16MP13C	21.00	XAHD60G	1400.00	48.00	33.60	14.00	11.75
TCE2B48S21S	CPLC100C20MP13C	21.00	CF/CM48C	1325.00	46.50	32.00	14.25	11.75
TCE2B48S21S	CPLC100C20MP13C	24.50	CF/CM48D	1325.00	46.50	32.00	14.25	12.00
TCE2B48S21S	CPLC100C20MP13C	21.00	CF/CM60C	1325.00	47.00	32.20	14.25	12.00
TCE2B48S21S	CPLC100C20MP13C	24.50	CF/CM60D	1400.00	47.50	33.00	14.50	12.00
TCE2B48S21S	CPLC100C20MP13C	21.00	XAF/XAUC48F	1375.00	46.50	32.20	14.00	11.75
TCE2B48S21S	CPLC100C20MP13C	21.00	XAF/XAUC60G	1325.00	48.00	32.80	14.50	12.00
TCE2B48S21S	CPLC100C20MP13C	24.50	XAF/XAUD60G	1425.00	47.50	33.20	14.50	12.00
TCE2B48S21S	CPLC100C20MP13C	24.50	XAFD48F	1325.00	46.00	31.60	14.25	11.75
TCE2B48S21S	CPLC100C20MP13C	21.00	XAHC48F	1325.00	46.00	31.60	14.25	11.75
TCE2B48S21S	CPLC100C20MP13C	21.00	XAHC60G	1325.00	48.00	32.80	14.50	12.00
TCE2B48S21S	CPLC100C20MP13C	24.50	XAHD48F	1325.00	46.00	31.60	14.25	11.75
TCE2B48S21S	CPLC100C20MP13C	21.00	XAHD60G	1325.00	47.50	32.40	14.50	12.00
TCE2B48S21S	CPLC120C20MP13C	21.00	CF/CM48C	1325.00	46.50	32.00	14.25	11.75
TCE2B48S21S	CPLC120C20MP13C	24.50	CF/CM48D	1325.00	46.50	32.00	14.25	12.00
TCE2B48S21S	CPLC120C20MP13C	21.00	CF/CM60C	1325.00	47.00	32.20	14.25	12.00
TCE2B48S21S	CPLC120C20MP13C	24.50	CF/CM60D	1400.00	47.50	33.00	14.50	12.00
TCE2B48S21S	CPLC120C20MP13C	21.00	XAF/XAUC48F	1375.00	46.50	32.20	14.00	11.75
TCE2B48S21S	CPLC120C20MP13C	21.00	XAF/XAUC60G	1325.00	48.00	32.80	14.50	12.00
TCE2B48S21S	CPLC120C20MP13C	24.50	XAF/XAUD60G	1425.00	47.50	33.20	14.50	12.00
TCE2B48S21S	CPLC120C20MP13C	24.50	XAFD48F	1325.00	46.00	31.60	14.25	11.75
TCE2B48S21S	CPLC120C20MP13C	21.00	XAHC48F	1325.00	46.00	31.60	14.25	11.75
TCE2B48S21S	CPLC120C20MP13C	21.00	XAHC60G	1325.00	48.00	32.80	14.50	12.00
TCE2B48S21S	CPLC120C20MP13C	24.50	XAHD48F	1325.00	46.00	31.60	14.25	11.75
TCE2B48S21S	CPLC120C20MP13C	21.00	XAHD60G	1325.00	47.50	32.40	14.50	12.00

Furnace capacity - 5 ton

Table 14: Furnace capacity - 5 ton

Outdoor unit model	Furnace model	Furnace width (in.)	Indoor coil model	Rated CFM	Net cool (MBH)	Sens cool (MBH)	SEER2	EER2
TCE2B60S21S	TL8E100C20UH11	24.50	CF/CM60D	1525.00	55.00	37.00	14.00	11.75
TCE2B60S21S	TM8E080C20MP11	21.00	CF/CM60C	1625.00	56.00	38.50	13.80	11.50
TCE2B60S21S	TM8E080C20MP11	24.50	CF/CM60D	1650.00	55.50	38.00	13.80	11.50
TCE2B60S21S	TM8E080C20MP11	24.50	CF/CM64D	1650.00	56.50	39.00	14.00	11.75
TCE2B60S21S	TM8E080C20MP11	21.00	XAF/XAUC60G	1625.00	56.00	38.50	13.80	11.50
TCE2B60S21S	TM8E080C20MP11	24.50	XAF/XAUD60G	1625.00	55.50	38.00	13.80	11.50
TCE2B60S21S	TM8E080C20MP11	24.50	XAF/XAUD60H	1625.00	56.00	38.50	13.80	11.50
TCE2B60S21S	TM8E080C20MP11	21.00	XAFC60H	1625.00	56.50	39.00	13.80	11.50
TCE2B60S21S	TM8E080C20MP11	21.00	XAHC60G	1625.00	56.00	38.50	13.80	11.50
TCE2B60S21S	TM8E080C20MP11	21.00	XAHC60H	1625.00	56.50	39.00	13.80	11.50
TCE2B60S21S	TM8E080C20MP11	21.00	XAHD60G	1600.00	56.00	38.00	13.80	11.50
TCE2B60S21S	TM8E080C20MP11	24.50	XAHD60H	1625.00	56.00	38.50	13.80	11.50
TCE2B60S21S	TM8E100C20MP11	21.00	CF/CM60C	1725.00	56.50	39.50	13.80	11.50
TCE2B60S21S	TM8E100C20MP11	24.50	CF/CM60D	1650.00	55.50	38.00	13.80	11.50
TCE2B60S21S	TM8E100C20MP11	24.50	CF/CM64D	1650.00	56.50	39.00	14.00	11.75
TCE2B60S21S	TM8E100C20MP11	21.00	XAF/XAUC60G	1725.00	56.50	39.00	13.80	11.50
TCE2B60S21S	TM8E100C20MP11	24.50	XAF/XAUD60G	1625.00	55.50	38.00	13.80	11.50
TCE2B60S21S	TM8E100C20MP11	24.50	XAF/XAUD60H	1625.00	56.00	38.50	13.80	11.50

Table 14: Furnace capacity - 5 ton

Outdoor unit model	Furnace model	Furnace width (in.)	Indoor coil model	Rated CFM	Net cool (MBH)	Sens cool (MBH)	SEER2	EER2
TCE2B60S21S	TM8E100C20MP11	21.00	XAFC60H	1625.00	56.50	39.00	13.80	11.50
TCE2B60S21S	TM8E100C20MP11	21.00	XAHC60G	1725.00	56.50	39.00	13.80	11.50
TCE2B60S21S	TM8E100C20MP11	21.00	XAHC60H	1625.00	56.50	39.00	13.80	11.50
TCE2B60S21S	TM8E100C20MP11	21.00	XAHD60G	1625.00	56.00	38.50	13.80	11.50
TCE2B60S21S	TM8E100C20MP11	24.50	XAHD60H	1625.00	56.00	38.50	13.80	11.50
TCE2B60S21S	TM8E120C20MP11	21.00	CF/CM60C	1650.00	56.00	38.50	13.80	11.50
TCE2B60S21S	TM8E120C20MP11	24.50	CF/CM60D	1675.00	55.50	38.00	13.80	11.50
TCE2B60S21S	TM8E120C20MP11	24.50	CF/CM64D	1650.00	56.50	39.00	14.00	11.75
TCE2B60S21S	TM8E120C20MP11	21.00	XAF/XAUC60G	1625.00	56.00	38.50	13.80	11.50
TCE2B60S21S	TM8E120C20MP11	24.50	XAF/XAUD60G	1650.00	55.50	38.00	13.80	11.50
TCE2B60S21S	TM8E120C20MP11	24.50	XAF/XAUD60H	1650.00	56.00	38.50	13.80	11.50
TCE2B60S21S	TM8E120C20MP11	21.00	XAFC60H	1650.00	56.50	39.00	13.80	11.50
TCE2B60S21S	TM8E120C20MP11	21.00	XAHC60G	1650.00	56.00	38.50	13.80	11.50
TCE2B60S21S	TM8E120C20MP11	21.00	XAHC60H	1650.00	56.50	39.00	13.80	11.50
TCE2B60S21S	TM8E120C20MP11	21.00	XAHD60G	1625.00	56.00	38.50	13.80	11.50
TCE2B60S21S	TM8E120C20MP11	24.50	XAHD60H	1625.00	56.00	38.50	13.80	11.50
TCE2B60S21S	TM8E130D20MP11	24.50	CF/CM60D	1525.00	55.50	37.40	14.00	11.75
TCE2B60S21S	TM8E130D20MP11	24.50	CF/CM64D	1800.00	57.00	40.00	14.00	11.75
TCE2B60S21S	TM8E130D20MP11	24.50	XAF/XAUD60G	1800.00	57.00	40.00	13.80	11.50
TCE2B60S21S	TM8E130D20MP11	24.50	XAF/XAUD60H	1800.00	57.00	40.50	14.00	11.75
TCE2B60S21S	TM8E130D20MP11	21.00	XAHD60G	1750.00	57.00	39.50	14.00	11.75
TCE2B60S21S	TM8E130D20MP11	24.50	XAHD60H	1775.00	57.00	40.00	14.00	11.75
TCE2B60S21S	TM8V100C20MP12C	21.00	CF/CM60C	1525.00	55.00	37.00	13.80	11.50
TCE2B60S21S	TM8V100C20MP12C	24.50	CF/CM60D	1525.00	55.00	37.00	14.00	11.75
TCE2B60S21S	TM8V100C20MP12C	24.50	CF/CM64D	1525.00	56.00	37.80	14.00	11.75
TCE2B60S21S	TM8V100C20MP12C	21.00	XAF/XAUC60G	1525.00	55.50	37.40	14.00	11.50
TCE2B60S21S	TM8V100C20MP12C	24.50	XAF/XAUD60G	1525.00	55.00	37.00	14.00	11.75
TCE2B60S21S	TM8V100C20MP12C	24.50	XAF/XAUD60H	1525.00	55.50	37.60	14.00	11.75
TCE2B60S21S	TM8V100C20MP12C	21.00	XAFC60H	1525.00	56.00	38.00	14.00	11.75
TCE2B60S21S	TM8V100C20MP12C	21.00	XAHC60G	1525.00	55.50	37.40	14.00	11.75
TCE2B60S21S	TM8V100C20MP12C	21.00	XAHC60H	1525.00	56.00	38.00	14.00	11.75
TCE2B60S21S	TM8V100C20MP12C	21.00	XAHD60G	1525.00	55.50	37.40	13.80	11.50
TCE2B60S21S	TM8V100C20MP12C	24.50	XAHD60H	1525.00	55.50	37.60	14.00	11.75
TCE2B60S21S	TM8V120C20MP12C	21.00	CF/CM60C	1525.00	55.00	37.00	13.80	11.50
TCE2B60S21S	TM8V120C20MP12C	24.50	CF/CM60D	1525.00	55.00	37.00	14.00	11.75
TCE2B60S21S	TM8V120C20MP12C	24.50	CF/CM64D	1525.00	56.00	37.80	14.00	11.75
TCE2B60S21S	TM8V120C20MP12C	21.00	XAF/XAUC60G	1525.00	55.50	37.40	14.00	11.50
TCE2B60S21S	TM8V120C20MP12C	24.50	XAF/XAUD60G	1525.00	55.00	37.00	14.00	11.75
TCE2B60S21S	TM8V120C20MP12C	24.50	XAF/XAUD60H	1525.00	55.50	37.60	14.00	11.75
TCE2B60S21S	TM8V120C20MP12C	21.00	XAFC60H	1525.00	56.00	38.00	14.00	11.75
TCE2B60S21S	TM8V120C20MP12C	21.00	XAHC60G	1525.00	55.50	37.40	14.00	11.75
TCE2B60S21S	TM8V120C20MP12C	21.00	XAHC60H	1525.00	56.00	38.00	14.00	11.75
TCE2B60S21S	TM8V120C20MP12C	21.00	XAHD60G	1525.00	55.50	37.40	13.80	11.50
TCE2B60S21S	TM8V120C20MP12C	24.50	XAHD60H	1525.00	55.50	37.60	14.00	11.75
TCE2B60S21S	TM8Y100C20MP11	21.00	CF/CM60C	1725.00	56.00	39.00	13.80	11.25
TCE2B60S21S	TM8Y100C20MP11	24.50	CF/CM60D	1775.00	56.00	39.50	13.80	11.50
TCE2B60S21S	TM8Y100C20MP11	24.50	CF/CM64D	1750.00	57.00	40.00	14.00	11.50
TCE2B60S21S	TM8Y100C20MP11	21.00	XAF/XAUC60G	1725.00	56.50	39.50	13.80	11.25
TCE2B60S21S	TM8Y100C20MP11	24.50	XAF/XAUD60G	1750.00	56.00	39.00	13.80	11.25
TCE2B60S21S	TM8Y100C20MP11	21.00	XAFC60H	1725.00	57.00	40.00	13.80	11.25
TCE2B60S21S	TM8Y100C20MP11	21.00	XAHC60G	1725.00	56.50	39.50	13.80	11.25
TCE2B60S21S	TM8Y100C20MP11	21.00	XAHC60H	1725.00	57.00	40.00	13.80	11.25
TCE2B60S21S	TM8Y100C20MP11	21.00	XAHD60G	1700.00	56.00	39.00	13.80	11.25
TCE2B60S21S	TM8Y120C20MP11	21.00	CF/CM60C	1725.00	56.00	39.00	13.80	11.25
TCE2B60S21S	TM8Y120C20MP11	24.50	CF/CM60D	1775.00	56.00	39.50	13.80	11.50
TCE2B60S21S	TM8Y120C20MP11	24.50	CF/CM64D	1750.00	57.00	40.00	14.00	11.50
TCE2B60S21S	TM8Y120C20MP11	21.00	XAF/XAUC60G	1725.00	56.50	39.50	13.80	11.25
TCE2B60S21S	TM8Y120C20MP11	24.50	XAF/XAUD60G	1750.00	56.00	39.00	13.80	11.25
TCE2B60S21S	TM8Y120C20MP11	21.00	XAFC60H	1725.00	57.00	40.00	13.80	11.25
TCE2B60S21S	TM8Y120C20MP11	21.00	XAHC60G	1725.00	56.50	39.50	13.80	11.25
TCE2B60S21S	TM8Y120C20MP11	21.00	XAHC60H	1725.00	57.00	40.00	13.80	11.25
TCE2B60S21S	TM8Y120C20MP11	21.00	XAHD60G	1700.00	56.00	39.00	13.80	11.25
TCE2B60S21S	TM9E080C20MP12	21.00	CF/CM60C	1750.00	56.50	39.50	13.80	11.50

Table 14: Furnace capacity - 5 ton

Outdoor unit model	Furnace model	Furnace width (in.)	Indoor coil model	Rated CFM	Net cool (MBH)	Sens cool (MBH)	SEER2	EER2
TCE2B60S21S	TM9E080C20MP12	24.50	CF/CM60D	1675.00	55.50	38.00	13.80	11.50
TCE2B60S21S	TM9E080C20MP12	24.50	CF/CM64D	1775.00	57.00	40.00	14.00	11.75
TCE2B60S21S	TM9E080C20MP12	21.00	XAF/XAUC60G	1750.00	57.00	39.50	14.00	11.50
TCE2B60S21S	TM9E080C20MP12	24.50	XAF/XAUD60G	1775.00	56.50	39.50	13.80	11.50
TCE2B60S21S	TM9E080C20MP12	24.50	XAF/XAUD60H	1750.00	56.50	39.50	13.80	11.50
TCE2B60S21S	TM9E080C20MP12	21.00	XAFC60H	1750.00	57.00	40.00	13.80	11.50
TCE2B60S21S	TM9E080C20MP12	21.00	XAHC60G	1750.00	57.00	39.50	14.00	11.50
TCE2B60S21S	TM9E080C20MP12	21.00	XAHC60H	1750.00	57.00	40.00	14.00	11.50
TCE2B60S21S	TM9E080C20MP12	21.00	XAHD60G	1725.00	56.50	39.00	14.00	11.75
TCE2B60S21S	TM9E080C20MP12	24.50	XAHD60H	1750.00	56.50	39.50	14.00	11.75
TCE2B60S21S	TM9E100C16MP12	24.50	CF/CM60D	1525.00	54.50	36.80	13.80	11.25
TCE2B60S21S	TM9E100C20MP12	21.00	CF/CM60C	1725.00	56.50	39.00	13.80	11.50
TCE2B60S21S	TM9E100C20MP12	24.50	CF/CM60D	1625.00	55.50	38.00	13.80	11.50
TCE2B60S21S	TM9E100C20MP12	24.50	CF/CM64D	1600.00	56.50	38.50	14.00	11.75
TCE2B60S21S	TM9E100C20MP12	21.00	XAF/XAUC60G	1725.00	56.50	39.00	14.00	11.50
TCE2B60S21S	TM9E100C20MP12	24.50	XAF/XAUD60G	1600.00	55.50	37.80	13.80	11.50
TCE2B60S21S	TM9E100C20MP12	24.50	XAF/XAUD60H	1725.00	56.50	39.50	13.80	11.50
TCE2B60S21S	TM9E100C20MP12	21.00	XAFC60H	1600.00	56.50	39.00	13.80	11.50
TCE2B60S21S	TM9E100C20MP12	21.00	XAHC60G	1725.00	56.50	39.00	14.00	11.50
TCE2B60S21S	TM9E100C20MP12	21.00	XAHC60H	1600.00	56.50	39.00	13.80	11.50
TCE2B60S21S	TM9E100C20MP12	21.00	XAHD60G	1700.00	56.50	39.00	14.00	11.75
TCE2B60S21S	TM9E100C20MP12	24.50	XAHD60H	1725.00	56.50	39.50	14.00	11.75
TCE2B60S21S	TM9E120D20MP12	24.50	CF/CM60D	1525.00	55.50	37.40	14.00	11.75
TCE2B60S21S	TM9E120D20MP12	24.50	CF/CM64D	1625.00	56.50	39.00	14.00	11.75
TCE2B60S21S	TM9E120D20MP12	24.50	XAF/XAUD60G	1625.00	56.00	38.50	13.80	11.50
TCE2B60S21S	TM9E120D20MP12	24.50	XAF/XAUD60H	1625.00	56.50	39.00	13.80	11.50
TCE2B60S21S	TM9E120D20MP12	21.00	XAHD60G	1600.00	56.00	38.00	13.80	11.25
TCE2B60S21S	TM9E120D20MP12	24.50	XAHD60H	1625.00	56.50	39.00	13.80	11.25
TCE2B60S21S	TM9V100C16MP12C	21.00	CF/CM60C	1525.00	55.00	37.20	13.80	11.50
TCE2B60S21S	TM9V100C16MP12C	24.50	CF/CM60D	1650.00	55.50	38.50	13.80	11.25
TCE2B60S21S	TM9V100C16MP12C	24.50	CF/CM64D	1525.00	56.00	37.80	14.00	11.75
TCE2B60S21S	TM9V100C16MP12C	21.00	XAF/XAUC60G	1525.00	55.50	37.40	13.80	11.50
TCE2B60S21S	TM9V100C16MP12C	24.50	XAF/XAUD60G	1525.00	55.00	37.00	13.80	11.50
TCE2B60S21S	TM9V100C16MP12C	24.50	XAF/XAUD60H	1525.00	55.50	37.80	13.80	11.50
TCE2B60S21S	TM9V100C16MP12C	21.00	XAFC60H	1525.00	56.00	38.00	13.80	11.50
TCE2B60S21S	TM9V100C16MP12C	21.00	XAHC60G	1525.00	55.50	37.40	13.80	11.50
TCE2B60S21S	TM9V100C16MP12C	21.00	XAHC60H	1525.00	56.00	38.00	13.80	11.50
TCE2B60S21S	TM9V100C16MP12C	21.00	XAHD60G	1550.00	55.50	37.60	13.80	11.50
TCE2B60S21S	TM9V100C16MP12C	24.50	XAHD60H	1550.00	55.50	37.80	13.80	11.50
TCE2B60S21S	TM9V100C20MP12C	21.00	CF/CM60C	1600.00	55.50	38.00	13.80	11.25
TCE2B60S21S	TM9V100C20MP12C	24.50	CF/CM60D	1600.00	55.00	37.60	13.80	11.50
TCE2B60S21S	TM9V100C20MP12C	24.50	CF/CM64D	1600.00	56.00	38.50	14.00	11.50
TCE2B60S21S	TM9V100C20MP12C	21.00	XAF/XAUC60G	1600.00	55.50	38.00	13.80	11.25
TCE2B60S21S	TM9V100C20MP12C	24.50	XAF/XAUD60G	1600.00	55.00	37.60	13.80	11.25
TCE2B60S21S	TM9V100C20MP12C	24.50	XAF/XAUD60H	1600.00	55.50	38.50	13.80	11.25
TCE2B60S21S	TM9V100C20MP12C	21.00	XAFC60H	1600.00	56.00	38.50	13.80	11.25
TCE2B60S21S	TM9V100C20MP12C	21.00	XAHC60G	1600.00	55.50	38.00	13.80	11.25
TCE2B60S21S	TM9V100C20MP12C	21.00	XAHC60H	1600.00	56.00	38.50	13.80	11.25
TCE2B60S21S	TM9V100C20MP12C	24.50	XAHD60H	1600.00	55.50	38.50	13.80	11.25
TCE2B60S21S	TM9V120D20MP12C	24.50	CF/CM60D	1625.00	56.00	38.00	14.00	11.75
TCE2B60S21S	TM9V120D20MP12C	24.50	CF/CM64D	1650.00	56.50	39.00	14.25	12.00
TCE2B60S21S	TM9V120D20MP12C	24.50	XAF/XAUD60G	1650.00	56.50	38.50	14.00	11.75
TCE2B60S21S	TM9V120D20MP12C	24.50	XAF/XAUD60H	1675.00	56.50	39.00	14.00	11.75
TCE2B60S21S	TM9V120D20MP12C	21.00	XAHD60G	1725.00	56.50	39.00	14.00	11.75
TCE2B60S21S	TM9V120D20MP12C	24.50	XAHD60H	1675.00	56.50	39.00	14.00	11.75
TCE2B60S21S	TM9Y100C20MP11	21.00	CF/CM60C	1575.00	55.00	37.60	13.80	11.25
TCE2B60S21S	TM9Y100C20MP11	24.50	CF/CM60D	1650.00	55.00	38.00	13.80	11.25
TCE2B60S21S	TM9Y100C20MP11	24.50	CF/CM64D	1600.00	56.00	38.50	13.80	11.25
TCE2B60S21S	TM9Y100C20MP11	21.00	XAF/XAUC60G	1575.00	55.50	37.80	13.80	11.25
TCE2B60S21S	TM9Y100C20MP11	24.50	XAF/XAUD60G	1575.00	55.00	37.60	13.80	11.25
TCE2B60S21S	TM9Y100C20MP11	24.50	XAF/XAUD60H	1575.00	55.50	38.00	13.80	11.25
TCE2B60S21S	TM9Y100C20MP11	21.00	XAFC60H	1575.00	56.00	38.50	13.80	11.25
TCE2B60S21S	TM9Y100C20MP11	21.00	XAHC60G	1575.00	55.50	37.80	13.80	11.25

Table 14: Furnace capacity - 5 ton

Outdoor unit model	Furnace model	Furnace width (in.)	Indoor coil model	Rated CFM	Net cool (MBH)	Sens cool (MBH)	SEER2	EER2
TCE2B60S21S	TM9Y100C20MP11	21.00	XAHC60H	1600.00	56.00	38.50	13.80	11.25
TCE2B60S21S	TM9Y100C20MP11	21.00	XAHD60G	1525.00	55.00	37.20	13.80	11.25
TCE2B60S21S	TM9Y100C20MP11	24.50	XAHD60H	1550.00	55.00	37.80	13.80	11.25
TCE2B60S21S	TM9Y120D20MP11	24.50	CF/CM60D	1750.00	56.50	39.50	13.80	11.25
TCE2B60S21S	TM9Y120D20MP11	24.50	CF/CM64D	1700.00	57.00	40.00	13.80	11.25
TCE2B60S21S	TM9Y120D20MP11	24.50	XAF/XAUD60G	1700.00	56.00	39.00	13.80	11.25
TCE2B60S21S	TM9Y120D20MP11	24.50	XAF/XAUD60H	1675.00	56.00	39.00	13.80	11.25
TCE2B60S21S	TM9Y120D20MP11	21.00	XAHD60G	1650.00	56.00	38.50	13.80	11.25
TCE2B60S21S	TM9Y120D20MP11	24.50	XAHD60H	1675.00	56.00	39.00	13.80	11.25
TCE2B60S21S	TMLE080C20MP11	21.00	CF/CM60C	1625.00	56.00	38.50	13.80	11.50
TCE2B60S21S	TMLE080C20MP11	24.50	CF/CM60D	1650.00	55.50	38.00	13.80	11.50
TCE2B60S21S	TMLE080C20MP11	24.50	CF/CM64D	1650.00	56.50	39.00	14.00	11.75
TCE2B60S21S	TMLE080C20MP11	21.00	XAF/XAUC60G	1625.00	56.00	38.50	13.80	11.50
TCE2B60S21S	TMLE080C20MP11	24.50	XAF/XAUD60G	1625.00	55.50	38.00	13.80	11.50
TCE2B60S21S	TMLE080C20MP11	24.50	XAF/XAUD60H	1625.00	56.00	38.50	13.80	11.50
TCE2B60S21S	TMLE080C20MP11	21.00	XAFC60H	1625.00	56.50	39.00	13.80	11.50
TCE2B60S21S	TMLE080C20MP11	21.00	XAHC60G	1625.00	56.00	38.50	13.80	11.50
TCE2B60S21S	TMLE080C20MP11	21.00	XAHC60H	1625.00	56.50	39.00	13.80	11.50
TCE2B60S21S	TMLE080C20MP11	21.00	XAHD60G	1600.00	56.00	38.00	13.80	11.50
TCE2B60S21S	TMLE080C20MP11	24.50	XAHD60H	1625.00	56.00	38.50	13.80	11.50
TCE2B60S21S	TMLE100C20MP11	21.00	CF/CM60C	1725.00	56.50	39.50	13.80	11.50
TCE2B60S21S	TMLE100C20MP11	24.50	CF/CM60D	1650.00	55.50	38.00	13.80	11.50
TCE2B60S21S	TMLE100C20MP11	24.50	CF/CM64D	1650.00	56.50	39.00	14.00	11.75
TCE2B60S21S	TMLE100C20MP11	21.00	XAF/XAUC60G	1725.00	56.50	39.00	13.80	11.50
TCE2B60S21S	TMLE100C20MP11	24.50	XAF/XAUD60G	1625.00	55.50	38.00	13.80	11.50
TCE2B60S21S	TMLE100C20MP11	24.50	XAF/XAUD60H	1625.00	56.00	38.50	13.80	11.50
TCE2B60S21S	TMLE100C20MP11	21.00	XAFC60H	1625.00	56.50	39.00	13.80	11.50
TCE2B60S21S	TMLE100C20MP11	21.00	XAHC60G	1725.00	56.50	39.00	13.80	11.50
TCE2B60S21S	TMLE100C20MP11	21.00	XAHC60H	1625.00	56.50	39.00	13.80	11.50
TCE2B60S21S	TMLE100C20MP11	21.00	XAHD60G	1625.00	56.00	38.50	13.80	11.50
TCE2B60S21S	TMLE100C20MP11	24.50	XAHD60H	1625.00	56.00	38.50	13.80	11.50
TCE2B60S21S	TMLE120C20MP11	21.00	CF/CM60C	1650.00	56.00	38.50	13.80	11.50
TCE2B60S21S	TMLE120C20MP11	24.50	CF/CM60D	1675.00	55.50	38.00	13.80	11.50
TCE2B60S21S	TMLE120C20MP11	24.50	CF/CM64D	1650.00	56.50	39.00	14.00	11.75
TCE2B60S21S	TMLE120C20MP11	21.00	XAF/XAUC60G	1625.00	56.00	38.50	13.80	11.50
TCE2B60S21S	TMLE120C20MP11	24.50	XAF/XAUD60G	1650.00	55.50	38.00	13.80	11.50
TCE2B60S21S	TMLE120C20MP11	24.50	XAF/XAUD60H	1650.00	56.00	38.50	13.80	11.50
TCE2B60S21S	TMLE120C20MP11	21.00	XAFC60H	1650.00	56.50	39.00	13.80	11.50
TCE2B60S21S	TMLE120C20MP11	21.00	XAHC60G	1650.00	56.00	38.50	13.80	11.50
TCE2B60S21S	TMLE120C20MP11	21.00	XAHC60H	1650.00	56.50	39.00	13.80	11.50
TCE2B60S21S	TMLE120C20MP11	21.00	XAHD60G	1625.00	56.00	38.50	13.80	11.50
TCE2B60S21S	TMLE120C20MP11	24.50	XAHD60H	1625.00	56.00	38.50	13.80	11.50
TCE2B60S21S	TMLE130D20MP11	24.50	CF/CM60D	1525.00	55.50	37.40	14.00	11.75
TCE2B60S21S	TMLE130D20MP11	24.50	CF/CM64D	1800.00	57.00	40.00	14.00	11.75
TCE2B60S21S	TMLE130D20MP11	24.50	XAF/XAUD60G	1800.00	57.00	40.00	13.80	11.50
TCE2B60S21S	TMLE130D20MP11	24.50	XAF/XAUD60H	1800.00	57.00	40.50	14.00	11.75
TCE2B60S21S	TMLE130D20MP11	21.00	XAHD60G	1750.00	57.00	39.50	14.00	11.75
TCE2B60S21S	TMLE130D20MP11	24.50	XAHD60H	1775.00	57.00	40.00	14.00	11.75
TCE2B60S21S	TMLV120C20MP12C	21.00	CF/CM60C	1525.00	55.00	37.00	13.80	11.50
TCE2B60S21S	TMLV120C20MP12C	24.50	CF/CM60D	1525.00	55.00	37.00	14.00	11.75
TCE2B60S21S	TMLV120C20MP12C	24.50	CF/CM64D	1525.00	56.00	37.80	14.00	11.75
TCE2B60S21S	TMLV120C20MP12C	21.00	XAF/XAUC60G	1525.00	55.50	37.40	14.00	11.50
TCE2B60S21S	TMLV120C20MP12C	24.50	XAF/XAUD60G	1525.00	55.00	37.00	14.00	11.75
TCE2B60S21S	TMLV120C20MP12C	24.50	XAF/XAUD60H	1525.00	55.50	37.60	14.00	11.75
TCE2B60S21S	TMLV120C20MP12C	21.00	XAFC60H	1525.00	56.00	38.00	14.00	11.75
TCE2B60S21S	TMLV120C20MP12C	21.00	XAHC60G	1525.00	55.50	37.40	14.00	11.75
TCE2B60S21S	TMLV120C20MP12C	21.00	XAHC60H	1525.00	56.00	38.00	14.00	11.75
TCE2B60S21S	TMLV120C20MP12C	21.00	XAHD60G	1525.00	55.50	37.40	13.80	11.50
TCE2B60S21S	TMLV120C20MP12C	24.50	XAHD60H	1525.00	55.50	37.60	14.00	11.75
TCE2B60S21S	TP9C100C16MP13C	21.00	CF/CM60C	1525.00	55.00	37.20	13.80	11.50
TCE2B60S21S	TP9C100C16MP13C	24.50	CF/CM60D	1650.00	55.50	38.50	13.80	11.25
TCE2B60S21S	TP9C100C16MP13C	24.50	CF/CM64D	1525.00	56.00	37.80	14.00	11.75
TCE2B60S21S	TP9C100C16MP13C	21.00	XAF/XAUC60G	1525.00	55.50	37.40	13.80	11.50

Table 14: Furnace capacity - 5 ton

Outdoor unit model	Furnace model	Furnace width (in.)	Indoor coil model	Rated CFM	Net cool (MBH)	Sens cool (MBH)	SEER2	EER2
TCE2B60S21S	TP9C100C16MP13C	24.50	XAF/XAUD60G	1525.00	55.00	37.00	13.80	11.50
TCE2B60S21S	TP9C100C16MP13C	24.50	XAF/XAUD60H	1525.00	55.50	37.80	13.80	11.50
TCE2B60S21S	TP9C100C16MP13C	21.00	XAFC60H	1525.00	56.00	38.00	13.80	11.50
TCE2B60S21S	TP9C100C16MP13C	21.00	XAHC60G	1525.00	55.50	37.40	13.80	11.50
TCE2B60S21S	TP9C100C16MP13C	21.00	XAHC60H	1525.00	56.00	38.00	13.80	11.50
TCE2B60S21S	TP9C100C16MP13C	21.00	XAHD60G	1550.00	55.50	37.60	13.80	11.50
TCE2B60S21S	TP9C100C16MP13C	24.50	XAHD60H	1550.00	55.50	37.80	13.80	11.50
TCE2B60S21S	TP9C100C20MP13C	21.00	CF/CM60C	1600.00	55.50	38.00	13.80	11.25
TCE2B60S21S	TP9C100C20MP13C	24.50	CF/CM60D	1600.00	55.00	37.60	13.80	11.50
TCE2B60S21S	TP9C100C20MP13C	24.50	CF/CM64D	1600.00	56.00	38.50	14.00	11.50
TCE2B60S21S	TP9C100C20MP13C	21.00	XAF/XAUC60G	1600.00	55.50	38.00	13.80	11.25
TCE2B60S21S	TP9C100C20MP13C	24.50	XAF/XAUD60G	1600.00	55.00	37.60	13.80	11.25
TCE2B60S21S	TP9C100C20MP13C	24.50	XAF/XAUD60H	1600.00	55.50	38.50	13.80	11.25
TCE2B60S21S	TP9C100C20MP13C	21.00	XAFC60H	1600.00	56.00	38.50	13.80	11.25
TCE2B60S21S	TP9C100C20MP13C	21.00	XAHC60G	1600.00	55.50	38.00	13.80	11.25
TCE2B60S21S	TP9C100C20MP13C	21.00	XAHC60H	1600.00	56.00	38.50	13.80	11.25
TCE2B60S21S	TP9C100C20MP13C	24.50	XAHD60H	1600.00	55.50	38.50	13.80	11.25
TCE2B60S21S	TP9C120D20MP13C	24.50	CF/CM60D	1625.00	56.00	38.00	14.00	11.75
TCE2B60S21S	TP9C120D20MP13C	24.50	CF/CM64D	1650.00	56.50	39.00	14.25	12.00
TCE2B60S21S	TP9C120D20MP13C	24.50	XAF/XAUD60G	1650.00	56.50	38.50	14.00	11.75
TCE2B60S21S	TP9C120D20MP13C	24.50	XAF/XAUD60H	1675.00	56.50	39.00	14.00	11.75
TCE2B60S21S	TP9C120D20MP13C	21.00	XAHD60G	1725.00	56.50	39.00	14.00	11.75
TCE2B60S21S	TP9C120D20MP13C	24.50	XAHD60H	1675.00	56.50	39.00	14.00	11.75
TCE2B60S21S	TPLC100C20MP13C	21.00	CF/CM60C	1525.00	55.00	37.00	13.80	11.50
TCE2B60S21S	TPLC100C20MP13C	24.50	CF/CM60D	1525.00	55.00	37.00	14.00	11.75
TCE2B60S21S	TPLC100C20MP13C	24.50	CF/CM64D	1525.00	56.00	37.80	14.00	11.75
TCE2B60S21S	TPLC100C20MP13C	21.00	XAF/XAUC60G	1525.00	55.50	37.40	14.00	11.50
TCE2B60S21S	TPLC100C20MP13C	24.50	XAF/XAUD60G	1525.00	55.00	37.00	14.00	11.75
TCE2B60S21S	TPLC100C20MP13C	24.50	XAF/XAUD60H	1525.00	55.50	37.60	14.00	11.75
TCE2B60S21S	TPLC100C20MP13C	21.00	XAFC60H	1525.00	56.00	38.00	14.00	11.75
TCE2B60S21S	TPLC100C20MP13C	21.00	XAHC60G	1525.00	55.50	37.40	14.00	11.75
TCE2B60S21S	TPLC100C20MP13C	21.00	XAHC60H	1525.00	56.00	38.00	14.00	11.75
TCE2B60S21S	TPLC100C20MP13C	21.00	XAHD60G	1525.00	55.50	37.40	13.80	11.50
TCE2B60S21S	TPLC100C20MP13C	24.50	XAHD60H	1525.00	55.50	37.60	14.00	11.75
TCE2B60S21S	TPLC120C20MP13C	21.00	CF/CM60C	1525.00	55.00	37.00	13.80	11.50
TCE2B60S21S	TPLC120C20MP13C	24.50	CF/CM60D	1525.00	55.00	37.00	14.00	11.75
TCE2B60S21S	TPLC120C20MP13C	24.50	CF/CM64D	1525.00	56.00	37.80	14.00	11.75
TCE2B60S21S	TPLC120C20MP13C	21.00	XAF/XAUC60G	1525.00	55.50	37.40	14.00	11.50
TCE2B60S21S	TPLC120C20MP13C	24.50	XAF/XAUD60G	1525.00	55.00	37.00	14.00	11.75
TCE2B60S21S	TPLC120C20MP13C	24.50	XAF/XAUD60H	1525.00	55.50	37.60	14.00	11.75
TCE2B60S21S	TPLC120C20MP13C	21.00	XAFC60H	1525.00	56.00	38.00	14.00	11.75
TCE2B60S21S	TPLC120C20MP13C	21.00	XAHC60G	1525.00	55.50	37.40	14.00	11.75
TCE2B60S21S	TPLC120C20MP13C	21.00	XAHC60H	1525.00	56.00	38.00	14.00	11.75
TCE2B60S21S	TPLC120C20MP13C	21.00	XAHD60G	1525.00	55.50	37.40	13.80	11.50
TCE2B60S21S	TPLC120C20MP13C	24.50	XAHD60H	1525.00	55.50	37.60	14.00	11.75
TCE2B60S21S	CP9C100C16MP13C	21.00	CF/CM60C	1525.00	55.00	37.20	13.80	11.50
TCE2B60S21S	CP9C100C16MP13C	24.50	CF/CM60D	1650.00	55.50	38.50	13.80	11.25
TCE2B60S21S	CP9C100C16MP13C	24.50	CF/CM64D	1525.00	56.00	37.80	14.00	11.75
TCE2B60S21S	CP9C100C16MP13C	21.00	XAF/XAUC60G	1525.00	55.50	37.40	13.80	11.50
TCE2B60S21S	CP9C100C16MP13C	24.50	XAF/XAUD60G	1525.00	55.00	37.00	13.80	11.50
TCE2B60S21S	CP9C100C16MP13C	24.50	XAF/XAUD60H	1525.00	55.50	37.80	13.80	11.50
TCE2B60S21S	CP9C100C16MP13C	21.00	XAFC60H	1525.00	56.00	38.00	13.80	11.50
TCE2B60S21S	CP9C100C16MP13C	21.00	XAHC60G	1525.00	55.50	37.40	13.80	11.50
TCE2B60S21S	CP9C100C16MP13C	21.00	XAHC60H	1525.00	56.00	38.00	13.80	11.50
TCE2B60S21S	CP9C100C16MP13C	21.00	XAHD60G	1550.00	55.50	37.60	13.80	11.50
TCE2B60S21S	CP9C100C16MP13C	24.50	XAHD60H	1550.00	55.50	37.80	13.80	11.50
TCE2B60S21S	CP9C100C20MP13C	21.00	CF/CM60C	1600.00	55.50	38.00	13.80	11.25
TCE2B60S21S	CP9C100C20MP13C	24.50	CF/CM60D	1600.00	55.00	37.60	13.80	11.50
TCE2B60S21S	CP9C100C20MP13C	24.50	CF/CM64D	1600.00	56.00	38.50	14.00	11.50
TCE2B60S21S	CP9C100C20MP13C	21.00	XAF/XAUC60G	1600.00	55.50	38.00	13.80	11.25
TCE2B60S21S	CP9C100C20MP13C	24.50	XAF/XAUD60G	1600.00	55.00	37.60	13.80	11.25
TCE2B60S21S	CP9C100C20MP13C	24.50	XAF/XAUD60H	1600.00	55.50	38.50	13.80	11.25
TCE2B60S21S	CP9C100C20MP13C	21.00	XAFC60H	1600.00	56.00	38.50	13.80	11.25

Table 14: Furnace capacity - 5 ton

Outdoor unit model	Furnace model	Furnace width (in.)	Indoor coil model	Rated CFM	Net cool (MBH)	Sens cool (MBH)	SEER2	EER2
TCE2B60S21S	CP9C100C20MP13C	21.00	XAHC60G	1600.00	55.50	38.00	13.80	11.25
TCE2B60S21S	CP9C100C20MP13C	21.00	XAHC60H	1600.00	56.00	38.50	13.80	11.25
TCE2B60S21S	CP9C100C20MP13C	24.50	XAHD60H	1600.00	55.50	38.50	13.80	11.25
TCE2B60S21S	CP9C120D20MP13C	24.50	CF/CM60D	1625.00	56.00	38.00	14.00	11.75
TCE2B60S21S	CP9C120D20MP13C	24.50	CF/CM64D	1650.00	56.50	39.00	14.25	12.00
TCE2B60S21S	CP9C120D20MP13C	24.50	XAF/XAUD60G	1650.00	56.50	38.50	14.00	11.75
TCE2B60S21S	CP9C120D20MP13C	24.50	XAF/XAUD60H	1675.00	56.50	39.00	14.00	11.75
TCE2B60S21S	CP9C120D20MP13C	21.00	XAHD60G	1725.00	56.50	39.00	14.00	11.75
TCE2B60S21S	CP9C120D20MP13C	24.50	XAHD60H	1675.00	56.50	39.00	14.00	11.75
TCE2B60S21S	CPLC100C20MP13C	21.00	CF/CM60C	1525.00	55.00	37.00	13.80	11.50
TCE2B60S21S	CPLC100C20MP13C	24.50	CF/CM60D	1525.00	55.00	37.00	14.00	11.75
TCE2B60S21S	CPLC100C20MP13C	24.50	CF/CM64D	1525.00	56.00	37.80	14.00	11.75
TCE2B60S21S	CPLC100C20MP13C	21.00	XAF/XAUC60G	1525.00	55.50	37.40	14.00	11.50
TCE2B60S21S	CPLC100C20MP13C	24.50	XAF/XAUD60G	1525.00	55.00	37.00	14.00	11.75
TCE2B60S21S	CPLC100C20MP13C	24.50	XAF/XAUD60H	1525.00	55.50	37.60	14.00	11.75
TCE2B60S21S	CPLC100C20MP13C	21.00	XAFC60H	1525.00	56.00	38.00	14.00	11.75
TCE2B60S21S	CPLC100C20MP13C	21.00	XAHC60G	1525.00	55.50	37.40	14.00	11.75
TCE2B60S21S	CPLC100C20MP13C	21.00	XAHC60H	1525.00	56.00	38.00	14.00	11.75
TCE2B60S21S	CPLC100C20MP13C	21.00	XAHD60G	1525.00	55.50	37.40	13.80	11.50
TCE2B60S21S	CPLC100C20MP13C	24.50	XAHD60H	1525.00	55.50	37.60	14.00	11.75
TCE2B60S21S	CPLC120C20MP13C	21.00	CF/CM60C	1525.00	55.00	37.00	13.80	11.50
TCE2B60S21S	CPLC120C20MP13C	24.50	CF/CM60D	1525.00	55.00	37.00	14.00	11.75
TCE2B60S21S	CPLC120C20MP13C	24.50	CF/CM64D	1525.00	56.00	37.80	14.00	11.75
TCE2B60S21S	CPLC120C20MP13C	21.00	XAF/XAUC60G	1525.00	55.50	37.40	14.00	11.50
TCE2B60S21S	CPLC120C20MP13C	24.50	XAF/XAUD60G	1525.00	55.00	37.00	14.00	11.75
TCE2B60S21S	CPLC120C20MP13C	24.50	XAF/XAUD60H	1525.00	55.50	37.60	14.00	11.75
TCE2B60S21S	CPLC120C20MP13C	21.00	XAFC60H	1525.00	56.00	38.00	14.00	11.75
TCE2B60S21S	CPLC120C20MP13C	21.00	XAHC60G	1525.00	55.50	37.40	14.00	11.75
TCE2B60S21S	CPLC120C20MP13C	21.00	XAHC60H	1525.00	56.00	38.00	14.00	11.75
TCE2B60S21S	CPLC120C20MP13C	21.00	XAHD60G	1525.00	55.50	37.40	13.80	11.50
TCE2B60S21S	CPLC120C20MP13C	24.50	XAHD60H	1525.00	55.50	37.60	14.00	11.75

Furnace capacity data notes

- For rated condition information, see Air handler capacity data notes.
- High-efficiency motor furnaces have blower off delay (BOD) standard.
- PSC furnaces use coil only ratings.

Applications and accessories

Refer to the *Price Manual* for specific model numbers.

Table 15: Standard application limits

Standard application limits		
Maximum line set equivalent length		80 ft
Outdoor ambient temperature limits		
Cooling operation	Maximum DB	125°F
	Minimum DB	55°F

ⓘ **Note:** For low ambient and long line set applications, see the accessories listed below.

Non-standard line set applications: For installations with reduced diameter or long line sets, refer to the current version of the *Piping Application Guide* P/N 247077, available in the *Application Bulletins* section on www.simplygettingthejobdone.org.

OD Unit Anti-Short Cycle Kit (10 Pack) (S1-2TD08700124BK): A time delay that prevents rapid compressor restarting as a result of power interruption, limit switch operation, or thermostat resetting. Not required for AC models with factory electronic controls.

Standard Low Ambient Control Kit (S1-2LA06700424): Allows the use of air conditioning at low outdoor ambient temperatures down to +20°F (-7°C). For use with all R-410A singlestage AC models.

Advanced Low Ambient Control Kit (S1-2LA04701024): Contains the necessary components and controls to allow cooling operation down to -20ºF (-29ºC). For use with some R-410A single-stage AC and HP models. This accessory can only be applied to models that contain a PSC outdoor fan motor.

Low Pressure Switch Kit (S1-2PS06700524): Provides field installed low pressure (loss of charge) protection. Not required for AC models with factory electronic controls.

High Ambient Outdoor Fan Motor (S1-FHM**HT):** Class F 70°C motor to allow cooling operation up to 160ºF air entering the outdoor coil. For use with all R-410A single-stage AC models containing R-410A refrigerant only.

Outdoor Communicating Board Kit (S1-33102952310): Electronic control upgrade for standard AC units to provide compatibility with the Hx™ Touch Screen Thermostat used in communicating mode.

Start Assist Kit (S1-2SA067***):** Provides increased compressor starting torque for areas with low supply voltage. Required for units with reciprocating compressors when applied with indoor TXV, and for all units when applied with long linesets or low ambient kits. May be factory installed on select AC units (see the Physical and electrical data table). Refer to the *Price Pages* or *Source 1 SmartSearch* for the correct kit for each application.

Compressor Crankcase Heater Kit (S1-025-***-***):** A wrap-around electrical resistance heater that warms the compressor sump, reducing the chance of liquid slugging on startup. Required on all long lineset and low ambient applications. Refer to the *Price Pages* or *Source 1 SmartSearch* for the correct part for each application.

Anchor Bracket Kit (S1-1HK0601): Firmly anchors unit to pad or support structure. When properly installed, approved for ground-mounted or roof-mounted applications.

Indoor TXV Kit (S1-1TVM*):** Thermal expansion valves precisely meter refrigerant for optimum performance over a wide range of conditions. See the *System charge* tables or refer to the *Price Pages* or *Source 1 Smart Search* for the TXV part number for each AC model.

Winter Cover Kit (S1-CCVRE*):** Custom fit winter cover protects AC outdoor unit from debris during the off-season. Remove before unit operation. Refer to the *Price Pages* or *Source 1 SmartSearch* for the correct cover for each application.

Cold Weather Charging Tent (S1-CHGTENT01): Provides warm environment to accurately service AC systems in ambient conditions 55ºF (13ºC) or colder.

Touch-up Paint (S1-5130153**:** Color matched aerosol paint for touching up unit chassis and panels. Refer to the *Price Pages* or *Source 1 SmartSearch* for the correct color for each application.

Compressor Sound Blanket (S1-01007xxx000): A field installed dense foam cover that provides 2 dBA sound level reduction. Refer to the *Price Pages* or *Source 1 SmartSearch* for the correct blanket for each application.

Thermostat: Compatible thermostat controls are available through accessory sourcing. For optimum performance, these outdoor units are fully compatible with our residential *Hx™ Touch Screen Thermostats* available through *Source 1*. For more information, refer to the *Thermostats & Controllers* section at http://www.simplygettingthejobdone.com.

Sound power rating

Table 16: Octave band sound power level (db re. 1-pW)

Outdoor unit model	Power level 63 (Hz)	Power level 125 (Hz)	Power level 250 (Hz)	Power level 500 (Hz)	Power level 1000 (Hz)	Power level 2000 (Hz)	Power level 4000 (Hz)	Power level 8000 (Hz)	dBA	SQI
TCE2B18S21S	71.3	72.5	65.7	72.8	66.2	65.1	57.6	53.3	73.0	19.0
TCE2B24S21S	68.0	73.9	69.9	69.9	66.8	64.2	58.9	55.6	73.0	19.1
TCE2B30S21S	67.0	67.9	67.5	67.8	64.2	61.7	58.0	54.8	73.0	19.0
TCE2B36S21S	66.9	70.1	69.4	70.3	69.2	64.0	59.7	54.7	73.0	19.0
TCE2B42S21S	66.2	72.4	70.5	69.2	67.1	63.6	58.9	58.0	73.0	19.0
TCE2B48S21S	68.7	69.4	72.9	74.0	70.0	69.8	65.1	60.0	76.0	19.2
TCE2B60S21S	68.6	72.3	73.2	74.5	68.6	68.8	65.1	61.1	76.0	19.0

Mechanical specifications

Manufacture and certifications

- Units shall be assembled at a facility with an ISO 9001:2015-certified Quality Management System.
- Units shall be certified by CSA to UL 1995/CSA 22.2 and performance certified to ANSI/AHRI Standard 210/240.
- Units shall be sound tested according to ANSI/AHRI Standard 270.
- Certified matched system ratings shall be available for download from the AHRI online directory at www.ahridirectory.org.

Unit application

- Units shall be approved for cooling operation between 55°F and 125°F without modification.
- Units shall be approved for line sets up to 80 ft equivalent length without modification.
- Units shall be approved for installation within 6 in. of a flat vertical wall without modification, according to the instructions in the technical literature.
- Units shall be certified to the 5th Edition (2014) of the Florida Building Code for a combined allowable lateral and uplift wind force of 200 psf and 100 psf, respectively, for both ground-mounted and rooftop-mounted applications up to 200 ft above grade with approved mounting kit.
- Units shall be designed to 76 dBA or less to minimize sound pollution.

Unit access

- Units shall have a removable fan guard that can be removed independently of the top for interior access through the top of the unit without damaging the coil.
- Units shall have two removable stamped steel coil guards for exterior coil access.
- Units shall have a separate compartment for electrical controls that can be accessed without disturbing the unit airflow.
- Units shall have a blockoff panel that can be removed to provide interior unit access through the side of the unit.
- Units shall have a removable blockoff panel and a swing away removable electrical panel that provides sufficient interior unit access for removing the compressor through the side of the unit.

Unit construction

- Units shall be shipped completely wired, piped, and assembled. Wiring pigtails shall be provided for field control wiring connections. Service valves shall be provided for field refrigerant line connections.
- Units shall be factory leak checked, run tested, and shipped with a holding charge of R-410A refrigerant.
- Unit cabinet components shall be G90 equivalent steel finished with powder-coat paint rated at a minimum of 500 h under ASTM B117 testing.
- Unit base pan shall be stamped G90 equivalent steel finished with powder-coat paint rated at a minimum of 500 h under ASTM B117 testing.
- Units shall have a single corner post opposite the electrical control box and two independently removable steel coil guard panels to optimize cabinet strength and serviceability.
- Units shall have L-shaped stamped sheet metal coil guards with punched and extruded slots for maximum panel durability and stiffness.
- Unit base valves shall be mounted diagonally on the unit base pan with service ports that provide sufficient clearance for low-loss hose fittings.
- Units shall be constructed with a high-pressure switch for system protection.
- Units shall be constructed with all badging and labels applied at the factory.

Unit components

- Compressor shall be hermetic with internal electrical overload protection and internal overpressure protection.
- Compressor shall be mounted on rubber vibration isolators that do not require the removal of transportation clips or brackets.
- Outdoor fan shall be direct drive with vertical air discharge for low sound levels.
- Outdoor fan motor shall be totally enclosed with permanently lubricated ball bearings motors approved for vertical shaft applications.
- Outdoor coil shall be air cooled and have zinc-coated aluminum microchannel construction for small size and low weight.

Unit warranties

- Unit manufacturer shall provide a 10-year compressor warranty without a requirement for unit registration.
- Unit manufacturer shall provide a 5-year parts warranty without a requirement for unit registration.

Typical installation

Figure 3: Typical installation

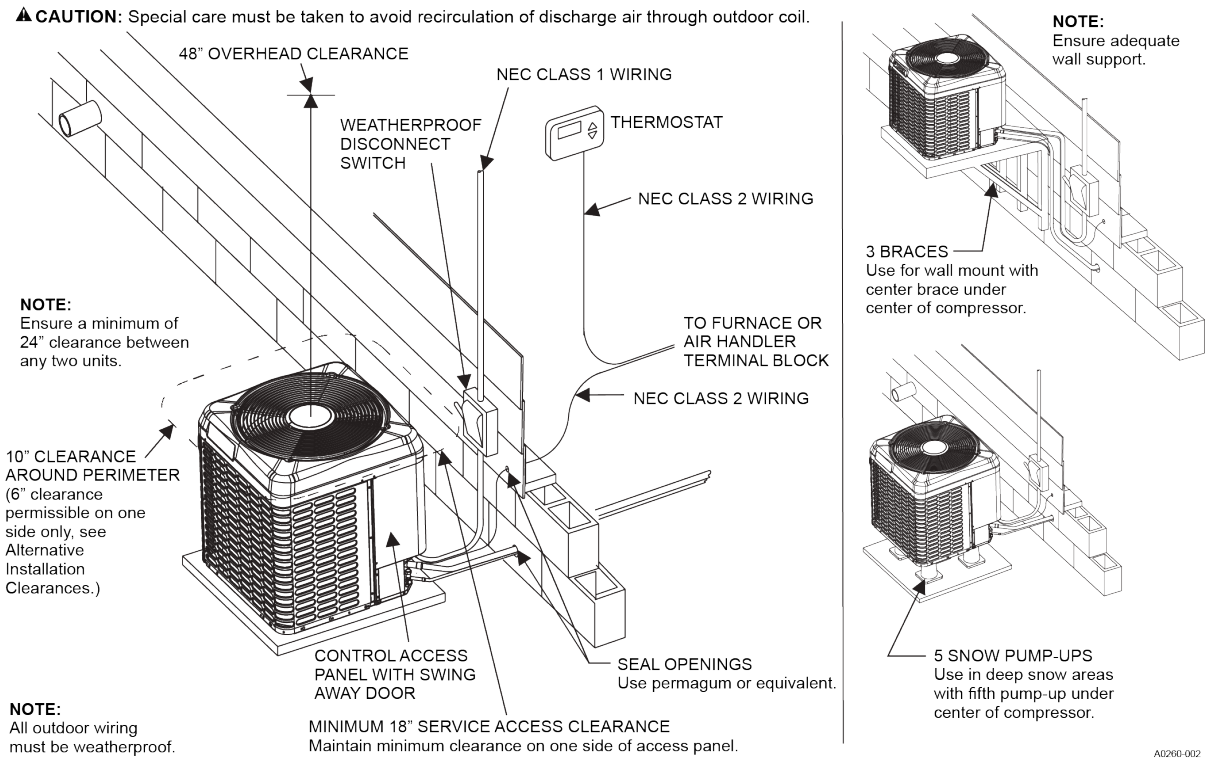

⚠ CAUTION

Care must be taken to prevent ice from damaging the unit. Damage may occur from ice falling onto unit from a sloped roof or from a vertical drip line due to a partial overhang.

Figure 4: Typical installation

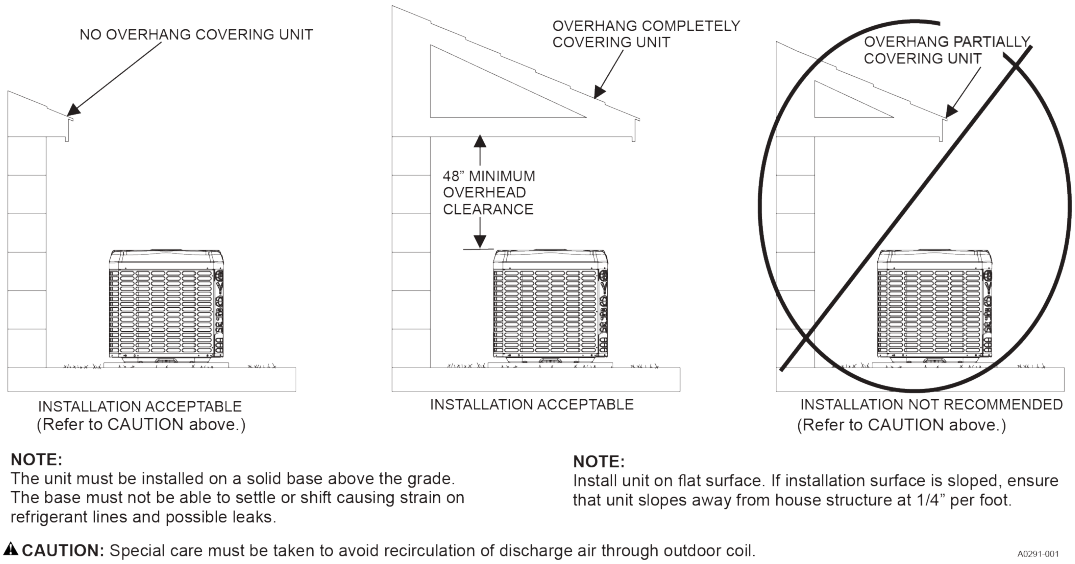

Typical field wiring

Figure 5: Typical field wiring

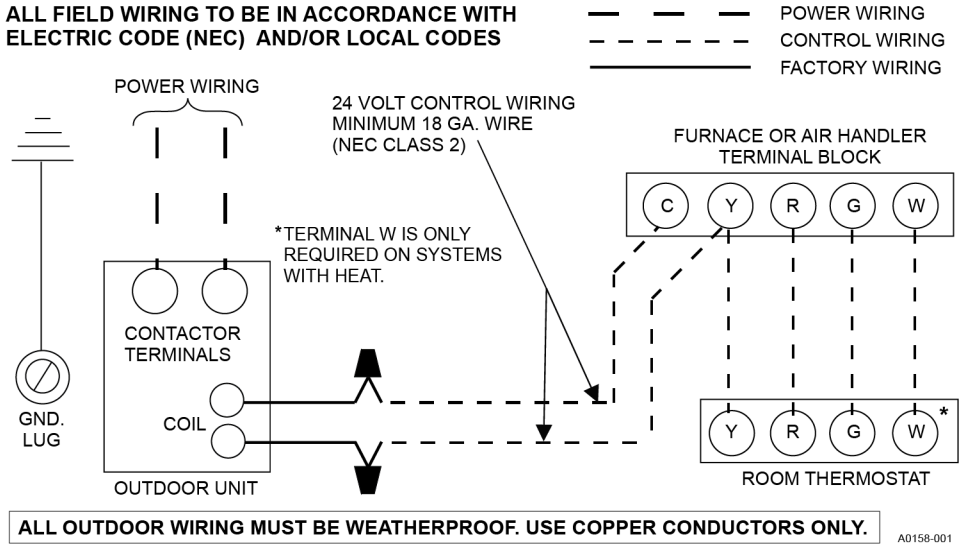

Alternative installation clearances

Figure 6: Alternative installation clearances

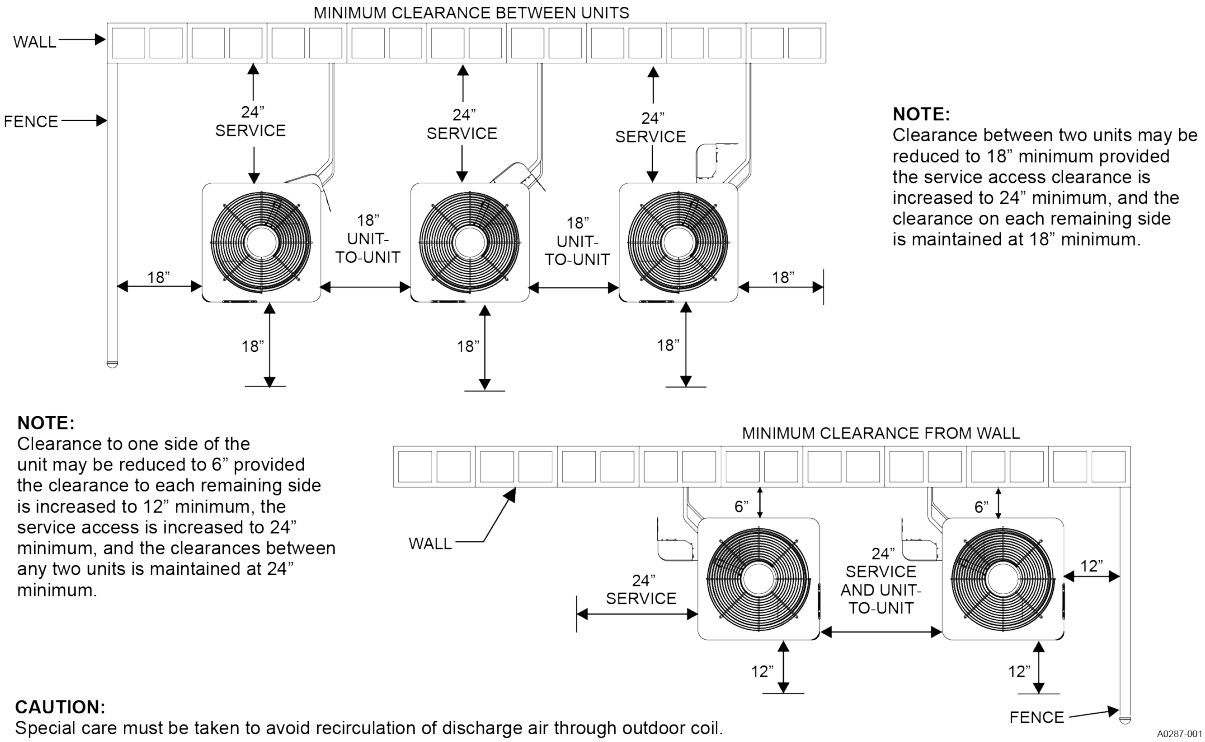

Performance data - 1.5 ton

See the following tables for performance and multiplier data for the TCE2B18S21S unit.

Condenser only performance data - 1.5 ton

Table 17: TCE2B18S21S condenser table

Saturated suction at compressor		Outdoor ambient temperature															
Temperature	Pressure	55°F		65°F		75°F		85°F		95°F		105°F		115°F		125°F	
(°F)	(psig)	MBH	kW	MBH	kW	MBH	kW	MBH	kW	MBH	kW	MBH	kW	MBH	kW	MBH	kW
35	107	17.8	0.65	16.8	0.78	15.8	0.90	14.8	1.03	13.8	1.16	12.8	1.32	11.6	1.50	10.4	1.72
40	118	19.6	0.62	18.5	0.76	17.4	0.89	16.4	1.02	15.3	1.15	14.1	1.31	12.9	1.49	11.6	1.70
45	130	21.5	0.59	20.3	0.73	19.1	0.87	18.0	1.00	16.8	1.14	15.6	1.30	14.3	1.48	12.8	1.69
50	142	23.6	0.55	22.3	0.71	21.0	0.85	19.7	0.99	18.4	1.13	17.1	1.29	15.7	1.47	14.2	1.68
55	156	25.7	0.51	24.3	0.67	23.0	0.82	21.6	0.97	20.2	1.12	18.7	1.28	17.2	1.46	15.6	1.66

Condenser only performance data notes

- For outdoor unit (condenser) performance only. Data does not include the effects of air handler power or heat.
- Performance based on 15°F subcooling and 15°F superheat at the outdoor unit base valves:
  a. Increase capacity by 1% for each 2°F increase in subcooling.
  b. Decrease capacity by 1% for each 2°F decrease in subcooling.
- Maximum recommended condensing temperature is 140°F.

Cooling performance data - 1.5 ton

Table 18: Cooling performance data - TCE2B18S21S with indoor coil XAFA24BXXN1

Air temperature entering outdoor unit (°F)	ID CFM	450					600					750				
	ID DB (°F)	80	80	75	80	80	80	80	75	80	80	80	80	75	80	80
	ID WB (°F)	57	62	62	67	72	57	62	62	67	72	57	62	62	67	72
55	**T.C.**	16.8	18.9	18.8	20.5	22.9	18.3	19.8	19.7	21.9	23.9	19.3	20.3	20.3	22.7	24.5
	S.C.	16.8	15.8	13.5	13.1	11.4	18.3	18.1	15.2	15.2	12.3	19.3	20.1	16.7	17.1	13.0
	kW	0.92	0.93	0.93	0.91	0.87	0.95	0.98	0.98	0.94	0.91	0.99	1.02	1.03	0.99	0.96
65	**T.C.**	16.8	18.3	18.2	20.0	22.0	18.3	19.1	19.1	21.0	22.9	19.4	19.6	19.6	21.5	23.4
	S.C.	16.8	15.4	13.2	13.2	11.0	18.3	17.4	14.7	14.7	11.9	19.4	19.1	15.9	16.0	12.7
	kW	1.10	1.07	1.08	1.05	1.01	1.14	1.12	1.13	1.09	1.05	1.18	1.18	1.18	1.14	1.11
75	**T.C.**	16.2	17.5	17.4	19.2	21.1	17.6	18.2	18.2	20.0	21.9	18.5	18.6	18.7	20.5	22.4
	S.C.	16.2	14.9	12.7	12.8	10.5	17.6	16.9	14.2	14.2	11.4	18.5	18.5	15.4	15.5	12.2
	kW	1.17	1.15	1.16	1.13	1.11	1.22	1.21	1.21	1.19	1.16	1.27	1.27	1.27	1.24	1.21
85	**T.C.**	15.6	16.7	16.7	18.3	20.2	16.9	17.3	17.4	19.1	20.9	17.8	17.8	17.8	19.5	21.3
	S.C.	15.6	14.5	12.3	12.3	10.1	16.9	16.3	13.7	13.8	11.0	17.8	17.8	14.9	14.9	11.7
	kW	1.25	1.24	1.24	1.22	1.20	1.30	1.30	1.30	1.28	1.26	1.36	1.36	1.36	1.34	1.32
95	**T.C.**	15.0	16.0	15.9	17.5	19.3	16.2	16.5	16.5	18.2	19.9	17.0	17.0	16.9	18.6	20.3
	S.C.	15.0	14.0	11.9	12.0	9.8	16.2	15.8	13.3	13.3	10.6	17.0	17.0	14.4	14.5	11.3
	kW	1.39	1.39	1.39	1.38	1.36	1.45	1.45	1.45	1.43	1.42	1.51	1.51	1.51	1.50	1.48
105	**T.C.**	14.4	15.1	15.1	16.6	18.2	15.5	15.5	15.6	17.1	18.7	16.2	16.2	15.8	17.4	19.0
	S.C.	14.4	13.7	11.6	11.6	9.4	15.5	15.5	12.9	13.0	10.2	16.2	16.2	14.0	14.1	10.9
	kW	1.62	1.62	1.62	1.62	1.61	1.69	1.69	1.69	1.68	1.67	1.75	1.75	1.75	1.74	1.74
115	**T.C.**	13.8	14.2	14.2	15.7	17.3	14.8	14.8	14.7	16.2	17.8	15.4	15.4	14.8	16.4	18.0
	S.C.	13.8	13.3	11.2	11.3	9.1	14.8	14.8	12.6	12.6	9.9	15.4	15.4	13.7	13.8	10.6
	kW	1.82	1.82	1.82	1.81	1.80	1.88	1.88	1.88	1.88	1.87	1.94	1.94	1.95	1.94	1.93
125	**T.C.**	12.2	12.6	12.7	14.4	16.4	13.4	13.8	13.3	15.1	17.0	14.4	14.8	13.8	15.5	17.4
	S.C.	12.2	12.5	10.3	10.6	8.8	13.4	13.8	12.1	12.3	9.7	14.4	14.8	13.7	13.9	10.5
	kW	2.10	2.09	2.09	2.06	2.02	2.12	2.12	2.13	2.11	2.09	2.16	2.16	2.17	2.17	2.17

Cooling performance data notes

- All capacities include indoor fan heat. kW values are for the system (outdoor + indoor).
- Green shaded cells are ACCA (TVA) conditions.
- Blue shaded cells are AHRI conditions.

Multipliers for determining the performance with other indoor sections

ⓘ **Note:** For dry bulb temperatures different than those listed (between 73°F to 87°F), sensible capacity increases by 1060 BTUH per 1000 CFM per degree above the listed temperature and decreases by 1060 BTUH per 1000 CFM per degree below the listed temperature.

Cool multiplier airhandler - 1.5 ton

Table 19: Cool multiplier air handler - 1.5 ton

Air handler model	Indoor coil model	Total capacity	Sensible capacity	kW
—	CF/CM/CU30B	1.00	0.96	1.00
—	CF/CM30A	1.00	0.96	1.00
—	CF/CM30C	1.00	0.96	1.00
—	XAF/XAUB30C	1.00	1.02	1.00

Table 19: Cool multiplier air handler - 1.5 ton

Air handler model	Indoor coil model	Total capacity	Sensible capacity	kW
—	XAFB24B	1.00	1.00	1.00
—	XAFC30C	1.00	1.02	1.00
—	XAHA24B	1.00	1.00	1.00
—	XAHB24B	1.00	1.00	1.00
—	XAHB30C	1.00	1.02	1.00
—	XAHC30C	1.00	1.02	1.00
AE30BX21	—	0.99	0.89	0.91
AVC30BX21	—	1.02	0.96	0.94
JHETB18BXXS2N1	—	1.02	1.02	0.91
JHETB24CXXS2N1	—	1.02	1.00	0.89
JHVTB18BXXC2N1	—	1.02	1.04	0.91
JHVTB24CXXC2N1	—	1.02	1.02	0.89
JMET08BS2N1A	XAF/XAUB30C	1.02	1.04	0.89
JMET08BS2N1A	XAFB24B	1.02	1.02	0.91
JMET08BS2N1A	XAHB24B	1.02	1.02	0.91
JMET08BS2N1A	XAHB30C	1.02	1.03	0.89
JMET12BS2N1A	XAF/XAUB30C	1.02	1.05	0.89
JMET12BS2N1A	XAFB24B	1.02	1.04	0.91
JMET12BS2N1A	XAHB24B	1.02	1.03	0.91
JMET12BS2N1A	XAHB30C	1.02	1.05	0.89
JMET12CS2N1A	XAFC30C	1.02	1.03	0.89
JMET12CS2N1A	XAHC30C	1.02	1.02	0.89
JMET16CS2N1A	XAFC30C	1.02	1.02	0.89
JMET16CS2N1A	XAHC30C	1.02	1.02	0.89
JMVT12BC2N1A	XAF/XAUB30C	1.02	1.08	0.89
JMVT12BC2N1A	XAFB24B	1.02	1.06	0.92
JMVT12BC2N1A	XAHB24B	1.02	1.03	0.92
JMVT12BC2N1A	XAHB30C	1.02	1.08	0.91
JMVT16CC2N1A	XAFC30C	1.02	1.05	0.89
JMVT16CC2N1A	XAHC30C	1.02	1.05	0.89
JMVT17CC2N1A	XAFC30C	1.02	1.08	0.89
JMVT17CC2N1A	XAHC30C	1.02	1.08	0.89
ME08BN21	CF/CM30B	1.02	1.03	0.94
ME12BN21	CF/CM30B	1.02	0.99	0.94
ME12CN21	CF/CM30C	1.02	0.96	0.94
ME16CN21	CF/CM30C	1.02	1.02	0.94
MVC12CN21	CF/CM30C	1.02	1.02	0.92

Cool multiplier furnace - 1.5 ton

Table 20: Cool multiplier furnace - 1.5 ton

Furnace model	Indoor coil model	Total capacity	Sensitive capacity	kW
TL8E060A12UH11	CF/CM/CU30B	1.01	1.00	0.93
TL8E060A12UH11	CF/CM30A	1.02	1.01	0.96
TL8E060A12UH11	XAF/XAUA24B	0.98	0.90	0.91
TL8E060A12UH11	XAF/XAUB30C	1.00	0.94	0.90
TL8E060A12UH11	XAFB24B	0.99	0.92	0.92
TL8E060A12UH11	XAHA24B	0.98	0.90	0.91
TL8E060A12UH11	XAHB24B	1.01	1.04	0.93
TL8E060A12UH11	XAHB30C	1.01	1.06	0.91
TL8E080C16UH11	XAFC30C	1.02	1.09	0.91
TL8E080C16UH11	XAHC30C	1.02	1.09	0.92
TL9E060B12UH11	CF/CM/CU30B	0.99	0.90	0.93

Table 20: Cool multiplier furnace - 1.5 ton

Furnace model	Indoor coil model	Total capacity	Sensitive capacity	kW
TL9E060B12UH11	CF/CM30C	0.99	0.90	0.93
TL9E060B12UH11	XAF/XAUB30C	1.01	0.95	0.93
TL9E060B12UH11	XAFB24B	0.99	0.92	0.92
TL9E060B12UH11	XAFC30C	1.01	0.95	0.93
TL9E060B12UH11	XAHB24B	0.99	0.92	0.92
TL9E060B12UH11	XAHB30C	1.01	0.95	0.93
TL9E060B12UH11	XAHC30C	1.01	0.95	0.93
TL9E080C16UH11	CF/CM30C	1.02	1.03	0.94
TL9E080C16UH11	XAFC30C	1.02	1.08	0.92
TL9E080C16UH11	XAHC30C	1.02	1.08	0.92
TM8E040A12MP11	CF/CM/CU30B	1.01	0.95	0.93
TM8E040A12MP11	CF/CM30A	1.00	0.92	0.94
TM8E040A12MP11	XAF/XAUA24B	1.01	0.97	0.93
TM8E040A12MP11	XAF/XAUB30C	1.01	0.98	0.89
TM8E040A12MP11	XAFB24B	1.01	0.98	0.93
TM8E040A12MP11	XAHA24B	1.01	0.97	0.93
TM8E040A12MP11	XAHB24B	1.01	0.98	0.93
TM8E040A12MP11	XAHB30C	1.01	0.98	0.89
TM8E060A12MP11	CF/CM/CU30B	1.01	0.98	0.93
TM8E060A12MP11	CF/CM30A	1.02	0.98	0.94
TM8E060A12MP11	XAF/XAUA24B	1.02	1.02	0.94
TM8E060A12MP11	XAF/XAUB30C	1.01	1.03	0.89
TM8E060A12MP11	XAFB24B	1.01	0.98	0.93
TM8E060A12MP11	XAHA24B	1.01	0.96	0.93
TM8E060A12MP11	XAHB24B	1.01	1.00	0.93
TM8E060A12MP11	XAHB30C	1.01	1.02	0.89
TM8E080B12MP11	CF/CM/CU30B	0.99	0.90	0.93
TM8E080B12MP11	CF/CM30C	1.00	0.92	0.92
TM8E080B12MP11	XAF/XAUB30C	1.00	0.95	0.90
TM8E080B12MP11	XAFB24B	1.00	0.95	0.92
TM8E080B12MP11	XAFC30C	1.00	0.95	0.90
TM8E080B12MP11	XAHB24B	1.00	0.95	0.92
TM8E080B12MP11	XAHB30C	1.00	0.95	0.90
TM8E080B12MP11	XAHC30C	1.00	0.95	0.90
TM8E080C16MP11	CF/CM30C	1.01	0.94	0.93
TM8E080C16MP11	XAFC30C	1.01	0.98	0.90
TM8E080C16MP11	XAHC30C	1.02	1.09	0.92
TM8E100B12MP11	CF/CM/CU30B	1.02	0.99	0.94
TM8E100B12MP11	CF/CM30C	1.01	0.98	0.93
TM8E100B12MP11	XAF/XAUB30C	1.02	1.05	0.91
TM8E100B12MP11	XAFB24B	1.02	1.03	0.94
TM8E100B12MP11	XAFC30C	1.01	1.03	0.89
TM8E100B12MP11	XAHB24B	0.99	0.92	0.92
TM8E100B12MP11	XAHB30C	1.02	1.03	0.92
TM8E100B12MP11	XAHC30C	1.01	1.03	0.89
TM8E100C16MP11	CF/CM30C	1.02	1.03	0.94
TM8E100C16MP11	XAFC30C	1.02	1.08	0.91
TM8E100C16MP11	XAHC30C	1.02	1.08	0.92
TM8E120C16MP11	CF/CM30C	1.01	0.92	0.93
TM8E120C16MP11	XAFC30C	1.02	1.09	0.91
TM8E120C16MP11	XAHC30C	1.02	1.08	0.91
TM8V060A12MP12C	CF/CM/CU30B	1.00	0.93	0.92
TM8V060A12MP12C	CF/CM30A	1.00	0.93	0.94

Table 20: Cool multiplier furnace - 1.5 ton

Furnace model	Indoor coil model	Total capacity	Sensitive capacity	kW
TM8V060A12MP12C	XAF/XAUA24B	1.01	0.98	0.93
TM8V060A12MP12C	XAF/XAUB30C	1.01	0.98	0.89
TM8V060A12MP12C	XAFB24B	1.01	0.98	0.93
TM8V060A12MP12C	XAHA24B	1.01	0.98	0.93
TM8V060A12MP12C	XAHB24B	1.01	0.98	0.93
TM8V060A12MP12C	XAHB30C	1.01	0.98	0.89
TM8V080B12MP12C	CF/CM/CU30B	1.02	0.98	0.96
TM8V080B12MP12C	CF/CM30C	1.01	0.96	0.95
TM8V080B12MP12C	XAF/XAUB30C	1.01	0.98	0.93
TM8V080B12MP12C	XAFB24B	1.01	0.96	0.93
TM8V080B12MP12C	XAFC30C	1.01	1.02	0.93
TM8V080B12MP12C	XAHB24B	1.01	0.97	0.93
TM8V080B12MP12C	XAHB30C	1.02	1.04	0.94
TM8V080B12MP12C	XAHC30C	1.01	1.02	0.93
TM8Y060A12MP11	CF/CM/CU30B	1.01	0.94	0.93
TM8Y060A12MP11	CF/CM30A	1.00	0.92	0.94
TM8Y060A12MP11	XAF/XAUA24B	1.01	0.96	0.93
TM8Y060A12MP11	XAF/XAUB30C	1.01	0.98	0.89
TM8Y060A12MP11	XAFB24B	1.01	1.02	0.93
TM8Y060A12MP11	XAHA24B	1.01	0.96	0.93
TM8Y060A12MP11	XAHB24B	1.01	0.96	0.93
TM8Y060A12MP11	XAHB30C	1.01	0.98	0.93
TM8Y080B12MP11	CF/CM/CU30B	1.02	1.00	0.94
TM8Y080B12MP11	CF/CM30C	1.01	0.98	0.93
TM8Y080B12MP11	XAF/XAUB30C	1.02	1.06	0.91
TM8Y080B12MP11	XAFB24B	1.01	0.98	0.93
TM8Y080B12MP11	XAFC30C	1.01	1.05	0.89
TM8Y080B12MP11	XAHB24B	1.01	0.98	0.93
TM8Y080B12MP11	XAHB30C	1.01	0.99	0.90
TM8Y080B12MP11	XAHC30C	1.01	0.98	0.89
TM8Y080C16MP11	XAFC30C	1.00	0.94	0.90
TM8Y080C16MP11	XAHC30C	1.01	0.94	0.93
TM8Y100C16MP11	XAFC30C	1.00	0.94	0.90
TM8Y100C16MP11	XAHC30C	1.01	0.94	0.93
TM9E026A08MP12	CF/CM/CU30B	1.00	0.94	0.94
TM9E026A08MP12	CF/CM30A	0.99	0.92	0.93
TM9E026A08MP12	XAF/XAUA24B	0.98	0.89	0.92
TM9E026A08MP12	XAF/XAUB30C	1.01	0.99	0.93
TM9E026A08MP12	XAFB24B	1.01	0.97	0.95
TM9E026A08MP12	XAHA24B	1.01	0.97	0.95
TM9E026A08MP12	XAHB24B	0.98	0.89	0.92
TM9E026A08MP12	XAHB30C	1.01	0.98	0.93
TM9E040A10MP12	CF/CM/CU30B	0.98	0.88	0.92
TM9E040A10MP12	CF/CM30A	0.98	0.89	0.92
TM9E040A10MP12	XAF/XAUA24B	0.98	0.90	0.92
TM9E040A10MP12	XAF/XAUB30C	1.01	0.98	0.93
TM9E040A10MP12	XAFB24B	1.01	0.96	0.93
TM9E040A10MP12	XAHA24B	0.98	0.90	0.92
TM9E040A10MP12	XAHB24B	1.01	0.96	0.93
TM9E040A10MP12	XAHB30C	1.01	0.98	0.93
TM9E060A10MP12	CF/CM/CU30B	0.99	0.90	0.93
TM9E060A10MP12	CF/CM30A	0.99	0.90	0.93
TM9E060A10MP12	XAF/XAUA24B	0.99	0.92	0.93

Table 20: Cool multiplier furnace - 1.5 ton

Furnace model	Indoor coil model	Total capacity	Sensitive capacity	kW
TM9E060A10MP12	XAF/XAUB30C	1.00	0.95	0.92
TM9E060A10MP12	XAFB24B	1.00	0.95	0.92
TM9E060A10MP12	XAHA24B	0.99	0.92	0.93
TM9E060A10MP12	XAHB24B	1.00	0.95	0.92
TM9E060A10MP12	XAHB30C	1.00	0.95	0.92
TM9E060B12MP12	CF/CM/CU30B	1.00	0.93	0.94
TM9E060B12MP12	CF/CM30C	1.00	0.93	0.94
TM9E060B12MP12	XAF/XAUB30C	1.01	0.99	0.93
TM9E060B12MP12	XAFB24B	1.01	0.96	0.93
TM9E060B12MP12	XAFC30C	1.01	0.98	0.93
TM9E060B12MP12	XAHB24B	1.01	0.96	0.93
TM9E060B12MP12	XAHB30C	1.01	0.98	0.93
TM9E060B12MP12	XAHC30C	1.01	0.98	0.93
TM9E080B12MP12	CF/CM/CU30B	1.02	0.96	0.96
TM9E080B12MP12	CF/CM30C	1.01	0.96	0.93
TM9E080B12MP12	XAF/XAUB30C	1.02	1.02	0.92
TM9E080B12MP12	XAFB24B	1.02	1.01	0.94
TM9E080B12MP12	XAFC30C	1.01	1.00	0.91
TM9E080B12MP12	XAHB24B	1.01	0.98	0.93
TM9E080B12MP12	XAHB30C	1.01	0.99	0.93
TM9E080B12MP12	XAHC30C	1.01	1.00	0.91
TM9E080C16MP12	CF/CM30C	1.02	1.03	0.94
TM9E080C16MP12	XAFC30C	1.02	1.08	0.91
TM9E080C16MP12	XAHC30C	1.02	1.06	0.92
TM9E100C16MP12	CF/CM30C	0.99	0.90	0.93
TM9E100C16MP12	XAFC30C	1.02	1.09	0.92
TM9E100C16MP12	XAHC30C	1.02	1.09	0.92
TM9V040A10MP12C	CF/CM/CU30B	0.98	0.89	0.92
TM9V040A10MP12C	CF/CM30A	0.98	0.89	0.92
TM9V040A10MP12C	XAF/XAUA24B	1.00	0.95	0.94
TM9V040A10MP12C	XAF/XAUB30C	1.00	0.95	0.92
TM9V040A10MP12C	XAFB24B	1.00	0.95	0.94
TM9V040A10MP12C	XAHA24B	0.99	0.95	0.93
TM9V040A10MP12C	XAHB24B	1.00	0.95	0.94
TM9V040A10MP12C	XAHB30C	1.01	0.97	0.93
TM9V060B12MP12C	CF/CM/CU30B	1.00	0.92	0.94
TM9V060B12MP12C	CF/CM30C	1.01	0.95	0.95
TM9V060B12MP12C	XAF/XAUB30C	1.01	0.98	0.93
TM9V060B12MP12C	XAFB24B	1.01	0.96	0.93
TM9V060B12MP12C	XAFC30C	1.01	0.98	0.93
TM9V060B12MP12C	XAHB24B	1.01	0.96	0.93
TM9V060B12MP12C	XAHB30C	1.01	0.98	0.93
TM9V060B12MP12C	XAHC30C	1.01	0.98	0.93
TM9V080B12MP12C	CF/CM/CU30B	1.02	1.02	0.94
TM9V080B12MP12C	CF/CM30C	1.01	1.00	0.93
TM9V080B12MP12C	XAF/XAUB30C	1.01	0.99	0.90
TM9V080B12MP12C	XAFB24B	1.01	0.98	0.93
TM9V080B12MP12C	XAFC30C	1.01	0.98	0.89
TM9V080B12MP12C	XAHB24B	1.01	0.98	0.93
TM9V080B12MP12C	XAHB30C	1.01	0.99	0.91
TM9V080B12MP12C	XAHC30C	1.01	0.98	0.89
TM9Y040A10MP11	CF/CM/CU30B	1.01	0.95	0.96
TM9Y040A10MP11	CF/CM30A	1.00	0.94	0.96

Table 20: Cool multiplier furnace - 1.5 ton

Furnace model	Indoor coil model	Total capacity	Sensitive capacity	kW
TM9Y040A10MP11	XAF/XAUA24B	1.01	0.98	0.95
TM9Y040A10MP11	XAF/XAUB30C	1.01	1.01	0.93
TM9Y040A10MP11	XAFB24B	1.01	0.98	0.95
TM9Y040A10MP11	XAHA24B	1.01	0.98	0.95
TM9Y040A10MP11	XAHB24B	1.01	0.98	0.95
TM9Y040A10MP11	XAHB30C	1.01	0.99	0.93
TM9Y060B12MP11	CF/CM/CU30B	0.98	0.88	0.92
TM9Y060B12MP11	CF/CM30C	0.99	0.90	0.93
TM9Y060B12MP11	XAF/XAUB30C	1.01	0.95	0.93
TM9Y060B12MP11	XAFB24B	0.99	0.92	0.92
TM9Y060B12MP11	XAFC30C	1.01	0.95	0.93
TM9Y060B12MP11	XAHB24B	0.99	0.92	0.92
TM9Y060B12MP11	XAHB30C	1.01	0.95	0.93
TM9Y060B12MP11	XAHC30C	1.01	0.95	0.93
TM9Y080B12MP11	CF/CM/CU30B	0.99	0.90	0.93
TM9Y080B12MP11	CF/CM30C	0.99	0.90	0.93
TM9Y080B12MP11	XAF/XAUB30C	1.00	0.95	0.90
TM9Y080B12MP11	XAFB24B	1.00	0.95	0.92
TM9Y080B12MP11	XAFC30C	1.00	0.95	0.90
TM9Y080B12MP11	XAHB24B	0.99	0.92	0.92
TM9Y080B12MP11	XAHB30C	1.01	0.95	0.93
TM9Y080B12MP11	XAHC30C	1.01	0.95	0.93
TMLE040A12MP11	CF/CM/CU30B	1.01	0.95	0.93
TMLE040A12MP11	CF/CM30A	1.00	0.92	0.94
TMLE040A12MP11	XAF/XAUA24B	1.01	0.97	0.93
TMLE040A12MP11	XAF/XAUB30C	1.01	0.98	0.89
TMLE040A12MP11	XAFB24B	1.01	0.98	0.93
TMLE040A12MP11	XAHA24B	1.01	0.97	0.93
TMLE040A12MP11	XAHB24B	1.01	0.98	0.93
TMLE040A12MP11	XAHB30C	1.01	0.98	0.89
TMLE060A12MP11	CF/CM/CU30B	1.01	0.98	0.93
TMLE060A12MP11	CF/CM30A	1.02	0.98	0.94
TMLE060A12MP11	XAF/XAUA24B	1.02	1.02	0.94
TMLE060A12MP11	XAF/XAUB30C	1.01	1.03	0.89
TMLE060A12MP11	XAFB24B	1.01	0.98	0.93
TMLE060A12MP11	XAHA24B	1.01	0.96	0.93
TMLE060A12MP11	XAHB24B	1.01	1.00	0.93
TMLE060A12MP11	XAHB30C	1.01	1.02	0.89
TMLE080B12MP11	CF/CM/CU30B	0.99	0.90	0.93
TMLE080B12MP11	CF/CM30C	1.00	0.92	0.92
TMLE080B12MP11	XAF/XAUB30C	1.00	0.95	0.90
TMLE080B12MP11	XAFB24B	1.00	0.95	0.92
TMLE080B12MP11	XAFC30C	1.00	0.95	0.90
TMLE080B12MP11	XAHB24B	1.00	0.95	0.92
TMLE080B12MP11	XAHB30C	1.00	0.95	0.90
TMLE080B12MP11	XAHC30C	1.00	0.95	0.90
TMLE080C16MP11	CF/CM30C	1.01	0.94	0.93
TMLE080C16MP11	XAFC30C	1.01	0.98	0.90
TMLE080C16MP11	XAHC30C	1.02	1.09	0.92
TMLE100B12MP11	CF/CM/CU30B	1.02	0.99	0.94
TMLE100B12MP11	CF/CM30C	1.01	0.98	0.93
TMLE100B12MP11	XAF/XAUB30C	1.02	1.05	0.91
TMLE100B12MP11	XAFB24B	1.02	1.03	0.94

Table 20: Cool multiplier furnace - 1.5 ton

Furnace model	Indoor coil model	Total capacity	Sensitive capacity	kW
TMLE100B12MP11	XAFC30C	1.01	1.03	0.89
TMLE100B12MP11	XAHB24B	0.99	0.92	0.92
TMLE100B12MP11	XAHB30C	1.02	1.03	0.92
TMLE100B12MP11	XAHC30C	1.01	1.03	0.89
TMLE100C16MP11	CF/CM30C	1.02	1.03	0.94
TMLE100C16MP11	XAFC30C	1.02	1.08	0.91
TMLE100C16MP11	XAHC30C	1.02	1.08	0.92
TMLE120C16MP11	CF/CM30C	1.01	0.92	0.93
TMLE120C16MP11	XAFC30C	1.02	1.09	0.91
TMLE120C16MP11	XAHC30C	1.02	1.08	0.91
TMLV060A12MP12C	CF/CM/CU30B	1.00	0.93	0.92
TMLV060A12MP12C	CF/CM30A	1.00	0.93	0.94
TMLV060A12MP12C	XAF/XAUA24B	1.01	0.98	0.93
TMLV060A12MP12C	XAF/XAUB30C	1.01	0.98	0.89
TMLV060A12MP12C	XAFB24B	1.01	0.98	0.93
TMLV060A12MP12C	XAHA24B	1.01	0.98	0.93
TMLV060A12MP12C	XAHB24B	1.01	0.98	0.93
TMLV060A12MP12C	XAHB30C	1.01	0.98	0.89
TP9C060B12MP13C	CF/CM/CU30B	1.00	0.92	0.94
TP9C060B12MP13C	CF/CM30C	1.01	0.95	0.95
TP9C060B12MP13C	XAF/XAUB30C	1.01	0.98	0.93
TP9C060B12MP13C	XAFB24B	1.01	0.96	0.93
TP9C060B12MP13C	XAFC30C	1.01	0.98	0.93
TP9C060B12MP13C	XAHB24B	1.01	0.96	0.93
TP9C060B12MP13C	XAHB30C	1.01	0.98	0.93
TP9C060B12MP13C	XAHC30C	1.01	0.98	0.93
TP9C080B12MP13C	CF/CM/CU30B	1.02	1.02	0.94
TP9C080B12MP13C	CF/CM30C	1.01	1.00	0.93
TP9C080B12MP13C	XAF/XAUB30C	1.01	0.99	0.90
TP9C080B12MP13C	XAFB24B	1.01	0.98	0.93
TP9C080B12MP13C	XAFC30C	1.01	0.98	0.89
TP9C080B12MP13C	XAHB24B	1.01	0.98	0.93
TP9C080B12MP13C	XAHB30C	1.01	0.99	0.91
TP9C080B12MP13C	XAHC30C	1.01	0.98	0.89
TPLC060A12MP13C	CF/CM/CU30B	1.00	0.93	0.92
TPLC060A12MP13C	CF/CM30A	1.00	0.93	0.94
TPLC060A12MP13C	XAF/XAUA24B	1.01	0.98	0.93
TPLC060A12MP13C	XAF/XAUB30C	1.01	0.98	0.89
TPLC060A12MP13C	XAFB24B	1.01	0.98	0.93
TPLC060A12MP13C	XAHA24B	1.01	0.98	0.93
TPLC060A12MP13C	XAHB24B	1.01	0.98	0.93
TPLC060A12MP13C	XAHB30C	1.01	0.98	0.89
TPLC080B12MP13C	CF/CM/CU30B	1.02	0.98	0.96
TPLC080B12MP13C	CF/CM30C	1.01	0.96	0.95
TPLC080B12MP13C	XAF/XAUB30C	1.01	0.98	0.93
TPLC080B12MP13C	XAFB24B	1.01	0.96	0.93
TPLC080B12MP13C	XAFC30C	1.01	1.02	0.93
TPLC080B12MP13C	XAHB24B	1.01	0.97	0.93
TPLC080B12MP13C	XAHB30C	1.02	1.04	0.94
TPLC080B12MP13C	XAHC30C	1.01	1.02	0.93
CP9C060B12MP13C	CF/CM/CU30B	1.00	0.92	0.94
CP9C060B12MP13C	CF/CM30C	1.01	0.95	0.95
CP9C060B12MP13C	XAF/XAUB30C	1.01	0.98	0.93

Table 20: Cool multiplier furnace - 1.5 ton

Furnace model	Indoor coil model	Total capacity	Sensitive capacity	kW
CP9C060B12MP13C	XAFB24B	1.01	0.96	0.93
CP9C060B12MP13C	XAFC30C	1.01	0.98	0.93
CP9C060B12MP13C	XAHB24B	1.01	0.96	0.93
CP9C060B12MP13C	XAHB30C	1.01	0.98	0.93
CP9C060B12MP13C	XAHC30C	1.01	0.98	0.93
CP9C080B12MP13C	CF/CM/CU30B	1.02	1.02	0.94
CP9C080B12MP13C	CF/CM30C	1.01	1.00	0.93
CP9C080B12MP13C	XAF/XAUB30C	1.01	0.99	0.90
CP9C080B12MP13C	XAFB24B	1.01	0.98	0.93
CP9C080B12MP13C	XAFC30C	1.01	0.98	0.89
CP9C080B12MP13C	XAHB24B	1.01	0.98	0.93
CP9C080B12MP13C	XAHB30C	1.01	0.99	0.91
CP9C080B12MP13C	XAHC30C	1.01	0.98	0.89
CPLC060A12MP13C	CF/CM/CU30B	1.00	0.93	0.92
CPLC060A12MP13C	CF/CM30A	1.00	0.93	0.94
CPLC060A12MP13C	XAF/XAUA24B	1.01	0.98	0.93
CPLC060A12MP13C	XAF/XAUB30C	1.01	0.98	0.89
CPLC060A12MP13C	XAFB24B	1.01	0.98	0.93
CPLC060A12MP13C	XAHA24B	1.01	0.98	0.93
CPLC060A12MP13C	XAHB24B	1.01	0.98	0.93
CPLC060A12MP13C	XAHB30C	1.01	0.98	0.89
CPLC080B12MP13C	CF/CM/CU30B	1.02	0.98	0.96
CPLC080B12MP13C	CF/CM30C	1.01	0.96	0.95
CPLC080B12MP13C	XAF/XAUB30C	1.01	0.98	0.93
CPLC080B12MP13C	XAFB24B	1.01	0.96	0.93
CPLC080B12MP13C	XAFC30C	1.01	1.02	0.93
CPLC080B12MP13C	XAHB24B	1.01	0.97	0.93
CPLC080B12MP13C	XAHB30C	1.02	1.04	0.94
CPLC080B12MP13C	XAHC30C	1.01	1.02	0.93

Performance data - 2 ton

See the following tables for performance and multiplier data for the TCE2B24S21S unit.

Condenser only performance data - 2 ton

Table 21: TCE2B24S21S condenser table

Saturated suction at compressor		Outdoor ambient temperature															
Temperature	Pressure	55 °F		65 °F		75 °F		85 °F		95 °F		105 °F		115 °F		125 °F	
(°F)	(psig)	MBH	kW	MBH	kW	MBH	kW	MBH	kW	MBH	kW	MBH	kW	MBH	kW	MBH	kW
35	107	23.8	0.93	22.6	1.09	21.3	1.25	20.0	1.42	18.7	1.61	17.3	1.82	15.8	2.08	14.1	2.40
40	118	26.2	0.90	24.8	1.07	23.4	1.23	22.1	1.41	20.6	1.59	19.1	1.81	17.5	2.06	15.7	2.37
45	130	28.8	0.87	27.3	1.04	25.8	1.21	24.3	1.39	22.7	1.58	21.1	1.80	19.3	2.05	17.4	2.35
50	142	31.6	0.83	29.9	1.01	28.3	1.19	26.6	1.37	24.9	1.57	23.2	1.79	21.3	2.04	19.3	2.33
55	156	34.4	0.79	32.6	0.98	30.9	1.17	29.1	1.35	27.3	1.55	25.4	1.77	23.4	2.02	21.2	2.32

Condenser only performance data notes

- For outdoor unit (condenser) performance only. Data does not include the effects of air handler power or heat.
- Performance based on 15°F subcooling and 15°F superheat at the outdoor unit base valves:
  a. Increase capacity by 1% for each 2°F increase in subcooling.
  b. Decrease capacity by 1% for each 2°F decrease in subcooling.
- Maximum recommended condensing temperature is 140°F.

Cooling performance data - 2 ton

Table 22: Cooling performance data - TCE2B24S21S with indoor coil XAFA24BXXN1

Air temperature entering outdoor unit (°F)	IDCFM	600					800					1000				
	ID DB (°F)	80	80	75	80	80	80	80	75	80	80	80	80	75	80	80
	ID WB (°F)	57	62	62	67	72	57	62	62	67	72	57	62	62	67	72
55	T.C.	21.9	23.8	23.7	26.1	28.3	24.0	24.9	24.9	27.2	29.4	25.5	25.7	25.5	27.8	29.8
	S.C.	21.9	19.8	16.9	16.7	13.5	24.0	22.6	18.9	18.6	14.5	25.5	24.9	20.7	20.1	15.2
	Kw	1.23	1.22	1.22	1.21	1.20	1.30	1.31	1.31	1.29	1.25	1.38	1.40	1.40	1.36	1.32
65	T.C.	21.3	23.1	23.0	25.3	27.7	23.1	24.2	24.1	26.4	28.8	24.3	24.7	24.7	27.1	29.4
	S.C.	21.3	19.3	16.4	16.4	13.4	23.1	21.8	18.2	18.2	14.6	24.3	23.8	19.8	19.8	15.5
	Kw	1.43	1.41	1.41	1.38	1.35	1.50	1.48	1.48	1.45	1.41	1.56	1.56	1.56	1.52	1.48
75	T.C.	20.7	22.4	22.3	24.5	26.8	22.5	23.3	23.3	25.6	27.9	23.6	23.8	23.8	26.1	28.5
	S.C.	20.7	18.9	16.1	16.1	13.1	22.5	21.4	17.9	17.9	14.2	23.6	23.5	19.4	19.4	15.1
	Kw	1.54	1.53	1.53	1.51	1.48	1.61	1.60	1.60	1.58	1.55	1.68	1.68	1.68	1.66	1.63
85	T.C.	20.1	21.6	21.5	23.6	25.9	21.8	22.4	22.4	24.6	26.9	22.9	22.9	22.9	25.1	27.4
	S.C.	20.1	18.5	15.7	15.7	12.7	21.8	20.9	17.5	17.5	13.8	22.9	22.9	19.0	19.0	14.7
	Kw	1.65	1.64	1.64	1.63	1.61	1.73	1.72	1.72	1.71	1.68	1.81	1.81	1.81	1.79	1.76
95	T.C.	19.4	20.6	20.5	22.6	24.8	20.9	21.4	21.4	23.5	25.7	21.9	21.9	21.8	23.9	26.1
	S.C.	19.4	18.0	15.2	15.2	12.3	20.9	20.4	17.0	17.0	13.4	21.9	21.9	18.5	18.4	14.2
	Kw	1.84	1.82	1.83	1.81	1.79	1.91	1.90	1.91	1.89	1.87	1.99	1.99	1.99	1.97	1.96
105	T.C.	18.7	19.6	19.6	21.6	23.7	20.2	20.2	20.3	22.3	24.4	21.1	21.1	20.6	22.7	24.8
	S.C.	18.7	17.7	14.9	14.9	11.9	20.2	20.2	16.7	16.7	13.0	21.1	21.1	18.3	18.3	13.9
	Kw	2.05	2.04	2.05	2.02	2.01	2.12	2.12	2.12	2.10	2.09	2.20	2.20	2.20	2.19	2.17
115	T.C.	17.9	18.5	18.5	20.4	22.3	19.3	19.3	19.1	21.0	22.9	20.1	20.1	19.3	21.3	23.2
	S.C.	17.9	17.3	14.5	14.5	11.5	19.3	19.3	16.4	16.4	12.6	20.1	20.1	17.9	18.0	13.5
	Kw	2.30	2.30	2.30	2.27	2.25	2.37	2.37	2.38	2.35	2.33	2.44	2.44	2.46	2.43	2.42

Table 22: Cooling performance data - TCE2B24S21S with indoor coil XAFA24BXXN1

Air temperature entering outdoor unit (°F)	IDCFM	600					800					1000				
	ID DB (°F)	80	80	75	80	80	80	80	75	80	80	80	80	75	80	80
	ID WB (°F)	57	62	62	67	72	57	62	62	67	72	57	62	62	67	72
125	T.C.	16.3	17.0	17.0	18.7	20.7	17.4	18.2	17.5	19.5	21.2	18.1	19.0	17.7	19.8	21.4
	S.C.	16.3	17.0	14.0	13.6	10.7	17.4	18.2	16.0	15.9	11.6	18.1	19.0	17.7	17.9	12.3
	Kw	2.61	2.61	2.62	2.61	2.57	2.67	2.67	2.69	2.66	2.65	2.75	2.74	2.77	2.75	2.73

Cooling performance data notes

- All capacities include indoor fan heat. kW values are for the system (outdoor + indoor).
- Green shaded cells are ACCA (TVA) conditions.
- Blue shaded cells are AHRI conditions.

Multipliers for determining the performance with other indoor sections

ⓘ **Note:** For dry bulb temperatures different than those listed (between 73°F to 87°F), sensible capacity increases by 1060 BTUH per 1000 CFM per degree above the listed temperature and decreases by 1060 BTUH per 1000 CFM per degree below the listed temperature.

Cool multiplier airhandler - 2 ton

Table 23: Cool multiplier air handler - 2 ton

Air handler model	Indoor coil model	Total capacity	Sensible capacity	kW
—	CF/CM/CU30B	1.00	0.98	1
—	CF/CM30A	1.00	0.98	1
—	CF/CM30C	1.00	0.98	1
—	XAF/XAUA24B	1.00	1	1
—	XAF/XAUB30C	1.00	1.02	1
—	XAFB24B	1.00	0	1
—	XAFC30C	1.00	1.02	1
—	XAHA24B	1.00	1	1
—	XAHB24B	1.00	1	1
—	XAHB30C	1.00	1.02	1
—	XAHC30C	1.00	1.02	1
AE30BX21	—	1.01	0.94	0.93
AVC30BX21	—	1.03	1.03	0.96
JHETB24CXXS2N1	—	1.03	1.01	0.9
JHVTB24CXXC2N1	—	1.03	1.03	0.9
JMET08BS2N1A	XAF/XAUB30C	1.03	0.99	0.9
JMET08BS2N1A	XAFB24B	1.02	0.97	0.92
JMET08BS2N1A	XAHB24B	1.01	0.95	0.91
JMET08BS2N1A	XAHB30C	1.03	0.98	0.89
JMET12BS2N1A	XAF/XAUB30C	1.03	1.03	0.9
JMET12BS2N1A	XAFB24B	1.03	0.99	0.93
JMET12BS2N1A	XAHB24B	1.03	0.99	0.93
JMET12BS2N1A	XAHB30C	1.03	1.02	0.9
JMET12CS2N1A	XAFC30C	1.03	1.08	0.89
JMET12CS2N1A	XAHC30C	1.03	1.07	0.89
JMET16CS2N1A	XAFC30C	1.03	1.08	0.89
JMET16CS2N1A	XAHC30C	1.03	1.07	0.89

Table 23: Cool multiplier air handler - 2 ton

Air handler model	Indoor coil model	Total capacity	Sensible capacity	kW
JMVT12BC2N1A	XAF/XAUB30C	1.03	1.04	0.9
JMVT12BC2N1A	XAFB24B	1.03	0.99	0.93
JMVT12BC2N1A	XAHB24B	1.02	0.99	0.92
JMVT12BC2N1A	XAHB30C	1.03	1.02	0.9
JMVT16CC2N1A	XAFC30C	1.03	1.07	0.9
JMVT16CC2N1A	XAHC30C	1.03	1.07	0.9
JMVT17CC2N1A	XAFC30C	1.03	1.05	0.9
JMVT17CC2N1A	XAHC30C	1.03	1.05	0.9
ME08BN21	CF/CM30B	1.01	0.94	0.95
ME12BN21	CF/CM30B	1.03	1.02	0.95
ME12BN41	CF/CM30B	1.01	0.93	0.93
ME12CN21	CF/CM30C	1.02	0.96	0.94
ME12CN41	CF/CM30C	1.02	0.96	0.94
ME16CN21	CF/CM30C	1.03	1.02	0.95
ME16CN41	CF/CM30C	1.03	1	0.95
MVC12BN21	CF/CM30B	1.03	1.01	0.94
MVC12CN21	CF/CM30C	1.03	1.02	0.94
MVC16CN21	CF/CM30C	1.03	1.02	0.94

Cool multiplier furnace - 2 ton

Table 24: Cool multiplier furnace - 2 ton

Furnace model	Indoor coil model	Total capacity	Sensible capacity	kW
TL8E060A12UH11	CF/CM/CU30B	1.00	0.92	0.94
TL8E060A12UH11	CF/CM30A	0.99	0.9	0.93
TL8E060A12UH11	XAF/XAUA24B	0.99	0.93	0.91
TL8E060A12UH11	XAF/XAUB30C	1.02	0.97	0.92
TL8E060A12UH11	XAFB24B	1.00	0.95	0.92
TL8E060A12UH11	XAHA24B	0.99	0.93	0.93
TL8E060A12UH11	XAHB24B	1.00	0.95	0.92
TL8E060A12UH11	XAHB30C	1.02	0.97	0.92
TL8E080C16UH11	CF/CM30C	1.01	0.94	0.93
TL8E080C16UH11	XAFC30C	1.03	1	0.94
TL8E080C16UH11	XAHC30C	1.03	1	0.94
TL8E100C20UH11	CF/CM30C	1.03	1.01	0.95
TL8E100C20UH11	XAFC30C	1.03	1.04	0.94
TL8E100C20UH11	XAHC30C	1.03	1.03	0.94
TL9E060B12UH11	CF/CM/CU30B	1.00	0.93	0.94
TL9E060B12UH11	CF/CM30C	1.00	0.93	0.94
TL9E060B12UH11	XAF/XAUB30C	1.03	0.99	0.95
TL9E060B12UH11	XAFB24B	1.01	0.97	0.95
TL9E060B12UH11	XAFC30C	1.02	0.99	0.94
TL9E060B12UH11	XAHB24B	1.00	0.95	0.94
TL9E060B12UH11	XAHB30C	1.02	0.98	0.94
TL9E060B12UH11	XAHC30C	1.02	0.99	0.94
TL9E080C16UH11	CF/CM30C	1.01	0.94	0.95
TL9E080C16UH11	XAFC30C	1.03	0.98	0.93
TL9E080C16UH11	XAHC30C	1.03	0.98	0.93
TL9E100C20UH11	CF/CM30C	1.03	1.03	0.95
TL9E100C20UH11	XAFC30C	1.03	1.08	0.93
TL9E100C20UH11	XAHC30C	1.03	1.07	0.93
TM8E040A12MP11	CF/CM/CU30B	1.01	0.94	0.95
TM8E040A12MP11	CF/CM30A	1.00	0.92	0.94

Table 24: Cool multiplier furnace - 2 ton

Furnace model	Indoor coil model	Total capacity	Sensible capacity	kW
TM8E040A12MP11	XAF/XAUA24B	1.00	0.95	0.92
TM8E040A12MP11	XAF/XAUB30C	1.02	0.98	0.92
TM8E040A12MP11	XAFB24B	1.01	0.96	0.93
TM8E040A12MP11	XAHA24B	1.00	0.95	0.92
TM8E040A12MP11	XAHB24B	1.01	0.97	0.93
TM8E040A12MP11	XAHB30C	1.02	0.98	0.92
TM8E060A12MP11	CF/CM/CU30B	1.01	0.94	0.95
TM8E060A12MP11	CF/CM30A	1.00	0.92	0.94
TM8E060A12MP11	XAF/XAUA24B	1.00	0.95	0.92
TM8E060A12MP11	XAF/XAUB30C	1.02	0.98	0.92
TM8E060A12MP11	XAFB24B	1.01	0.97	0.93
TM8E060A12MP11	XAHA24B	0.99	0.93	0.93
TM8E060A12MP11	XAHB24B	1.00	0.95	0.92
TM8E060A12MP11	XAHB30C	1.02	0.97	0.92
TM8E080B12MP11	CF/CM/CU30B	1.01	0.95	0.95
TM8E080B12MP11	CF/CM30C	1.02	0.96	0.96
TM8E080B12MP11	XAF/XAUB30C	1.03	1.01	0.94
TM8E080B12MP11	XAFB24B	1.01	0.97	0.93
TM8E080B12MP11	XAFC30C	1.02	0.99	0.92
TM8E080B12MP11	XAHB24B	1.01	0.97	0.93
TM8E080B12MP11	XAHB30C	1.03	1	0.95
TM8E080B12MP11	XAHC30C	1.02	0.99	0.92
TM8E080C16MP11	CF/CM30C	1.03	1.03	0.95
TM8E080C16MP11	XAFC30C	1.03	1	0.94
TM8E080C16MP11	XAHC30C	1.03	1	0.94
TM8E100B12MP11	CF/CM/CU30B	1.01	0.95	0.95
TM8E100B12MP11	CF/CM30C	1.02	0.96	0.96
TM8E100B12MP11	XAF/XAUB30C	1.03	1.01	0.94
TM8E100B12MP11	XAFB24B	1.01	0.97	0.93
TM8E100B12MP11	XAFC30C	1.02	0.99	0.92
TM8E100B12MP11	XAHB24B	1.01	0.97	0.93
TM8E100B12MP11	XAHB30C	1.03	1	0.94
TM8E100B12MP11	XAHC30C	1.02	0.99	0.92
TM8E100C16MP11	CF/CM30C	1.01	0.94	0.95
TM8E100C16MP11	XAFC30C	1.03	0.98	0.93
TM8E100C16MP11	XAHC30C	1.03	0.98	0.93
TM8E120C16MP11	CF/CM30C	1.01	0.94	0.93
TM8E120C16MP11	XAFC30C	1.03	1	0.94
TM8E120C16MP11	XAHC30C	1.03	0.98	0.93
TM8V060A12MP12C	CF/CM/CU30B	1.00	0.92	0.94
TM8V060A12MP12C	CF/CM30A	0.99	0.91	0.93
TM8V060A12MP12C	XAF/XAUA24B	0.99	0.92	0.91
TM8V060A12MP12C	XAF/XAUB30C	1.02	0.97	0.92
TM8V060A12MP12C	XAFB24B	1.00	0.95	0.92
TM8V060A12MP12C	XAHA24B	0.99	0.92	0.91
TM8V060A12MP12C	XAHB24B	1.00	0.95	0.92
TM8V060A12MP12C	XAHB30C	1.02	0.97	0.92
TM8V080B12MP12C	CF/CM/CU30B	0.99	0.9	0.95
TM8V080B12MP12C	CF/CM30C	0.99	0.9	0.93
TM8V080B12MP12C	XAF/XAUB30C	1.01	0.94	0.93
TM8V080B12MP12C	XAFB24B	0.98	0.9	0.92
TM8V080B12MP12C	XAFC30C	1.01	0.94	0.93
TM8V080B12MP12C	XAHB24B	0.98	0.9	0.92

Table 24: Cool multiplier furnace - 2 ton

Furnace model	Indoor coil model	Total capacity	Sensible capacity	kW
TM8V080B12MP12C	XAHB30C	1.01	0.94	0.93
TM8V080B12MP12C	XAHC30C	1.01	0.94	0.93
TM8V080C16MP12C	CF/CM30C	1.03	1	0.96
TM8V080C16MP12C	XAFC30C	1.03	1.03	0.93
TM8V080C16MP12C	XAHC30C	1.03	1.03	0.95
TM8V100C16MP12C	CF/CM30C	1.03	1	0.96
TM8V100C16MP12C	XAFC30C	1.03	1.03	0.93
TM8V100C16MP12C	XAHC30C	1.03	1.03	0.95
TM8Y060A12MP11	CF/CM/CU30B	0.98	0.89	0.92
TM8Y060A12MP11	CF/CM30A	0.98	0.87	0.94
TM8Y060A12MP11	XAF/XAUA24B	0.98	0.9	0.92
TM8Y060A12MP11	XAF/XAUB30C	1.02	0.95	0.92
TM8Y060A12MP11	XAFB24B	0.99	0.92	0.91
TM8Y060A12MP11	XAHA24B	0.98	0.9	0.92
TM8Y060A12MP11	XAHB24B	0.98	0.9	0.91
TM8Y060A12MP11	XAHB30C	1.01	0.93	0.93
TM8Y080B12MP11	CF/CM/CU30B	0.99	0.9	0.93
TM8Y080B12MP11	CF/CM30C	0.99	0.9	0.93
TM8Y080B12MP11	XAF/XAUB30C	1.03	0.97	0.93
TM8Y080B12MP11	XAFB24B	0.99	0.92	0.91
TM8Y080B12MP11	XAFC30C	1.02	0.96	0.92
TM8Y080B12MP11	XAHB24B	0.99	0.92	0.91
TM8Y080B12MP11	XAHB30C	1.02	0.95	0.92
TM8Y080B12MP11	XAHC30C	1.02	0.95	0.92
TM8Y080C16MP11	XAFC30C	1.03	1.02	0.94
TM8Y080C16MP11	XAHC30C	1.03	1.02	0.94
TM8Y100C16MP11	XAFC30C	1.03	1.02	0.94
TM8Y100C16MP11	XAHC30C	1.03	1.02	0.94
TM8Y100C20MP11	CF/CM30C	1.03	0.98	0.95
TM8Y100C20MP11	XAFC30C	1.03	1.02	0.94
TM8Y100C20MP11	XAHC30C	1.03	1.01	0.94
TM8Y120C20MP11	CF/CM30C	1.03	0.98	0.95
TM8Y120C20MP11	XAFC30C	1.03	1.02	0.94
TM8Y120C20MP11	XAHC30C	1.03	1.01	0.94
TM9E026A08MP12	CF/CM/CU30B	1.00	0.96	1
TM9E026A08MP12	CF/CM30A	0.99	0.93	0.99
TM9E026A08MP12	XAF/XAUA24B	1.00	0.98	0.98
TM9E026A08MP12	XAF/XAUB30C	1.02	1.02	0.96
TM9E026A08MP12	XAFB24B	1.00	0.98	0.98
TM9E026A08MP12	XAHA24B	0.99	0.96	0.97
TM9E026A08MP12	XAHB24B	1.00	0.98	0.98
TM9E026A08MP12	XAHB30C	1.02	1.01	0.98
TM9E040A10MP12	CF/CM/CU30B	0.99	0.91	0.95
TM9E040A10MP12	CF/CM30A	0.98	0.9	0.98
TM9E040A10MP12	XAF/XAUA24B	0.99	0.94	0.95
TM9E040A10MP12	XAF/XAUB30C	1.02	0.98	0.94
TM9E040A10MP12	XAFB24B	1.00	0.95	0.96
TM9E040A10MP12	XAHA24B	0.99	0.94	0.95
TM9E040A10MP12	XAHB24B	1.00	0.95	0.96
TM9E040A10MP12	XAHB30C	1.02	0.98	0.94
TM9E060A10MP12	CF/CM/CU30B	0.99	0.91	0.93
TM9E060A10MP12	CF/CM30A	0.99	0.91	0.95
TM9E060A10MP12	XAF/XAUA24B	0.99	0.93	0.93

Table 24: Cool multiplier furnace - 2 ton

Furnace model	Indoor coil model	Total capacity	Sensible capacity	kW
TM9E060A10MP12	XAF/XAUB30C	1.02	0.98	0.94
TM9E060A10MP12	XAFB24B	1.00	0.95	0.94
TM9E060A10MP12	XAHA24B	0.99	0.93	0.93
TM9E060A10MP12	XAHB24B	0.99	0.93	0.93
TM9E060A10MP12	XAHB30C	1.02	0.97	0.94
TM9E060B12MP12	CF/CM/CU30B	1.02	0.99	0.98
TM9E060B12MP12	CF/CM30C	1.02	0.99	0.98
TM9E060B12MP12	XAF/XAUB30C	1.03	1.04	0.95
TM9E060B12MP12	XAFB24B	1.02	1.01	0.98
TM9E060B12MP12	XAFC30C	1.02	1.03	0.94
TM9E060B12MP12	XAHB24B	1.02	1.01	0.98
TM9E060B12MP12	XAHB30C	1.03	1.03	0.95
TM9E060B12MP12	XAHC30C	1.02	1.02	0.94
TM9E080B12MP12	CF/CM/CU30B	1.02	0.98	0.96
TM9E080B12MP12	CF/CM30C	1.02	0.98	0.96
TM9E080B12MP12	XAF/XAUB30C	1.03	1.02	0.95
TM9E080B12MP12	XAFB24B	0.97	0.89	0.9
TM9E080B12MP12	XAFC30C	1.02	1.01	0.94
TM9E080B12MP12	XAHB24B	1.02	0.99	0.96
TM9E080B12MP12	XAHB30C	1.03	1.02	0.95
TM9E080B12MP12	XAHC30C	1.02	1.01	0.94
TM9E080C16MP12	CF/CM30C	1.01	0.94	0.95
TM9E080C16MP12	XAFC30C	1.03	0.98	0.93
TM9E080C16MP12	XAHC30C	1.03	0.97	0.93
TM9E100C16MP12	CF/CM30C	1.03	1.03	0.96
TM9E100C16MP12	XAFC30C	1.03	1	0.94
TM9E100C16MP12	XAHC30C	1.03	1	0.94
TM9V040A10MP12C	CF/CM/CU30B	0.98	0.89	0.94
TM9V040A10MP12C	CF/CM30A	0.98	0.88	0.96
TM9V040A10MP12C	XAF/XAUA24B	0.97	0.9	0.93
TM9V040A10MP12C	XAF/XAUB30C	1.01	0.94	0.93
TM9V040A10MP12C	XAFB24B	0.98	0.91	0.94
TM9V040A10MP12C	XAHA24B	0.97	0.9	0.93
TM9V040A10MP12C	XAHB24B	0.98	0.91	0.94
TM9V040A10MP12C	XAHB30C	1.00	0.93	0.94
TM9V060B12MP12C	CF/CM/CU30B	0.99	0.9	0.93
TM9V060B12MP12C	CF/CM30C	1.00	0.93	0.94
TM9V060B12MP12C	XAF/XAUB30C	1.03	0.99	0.95
TM9V060B12MP12C	XAFB24B	0.99	0.93	0.93
TM9V060B12MP12C	XAFC30C	1.02	0.99	0.94
TM9V060B12MP12C	XAHB24B	0.99	0.92	0.93
TM9V060B12MP12C	XAHB30C	1.00	0.91	0.92
TM9V060B12MP12C	XAHC30C	1.02	0.97	0.94
TM9V080B12MP12C	CF/CM/CU30B	1.00	0.92	0.94
TM9V080B12MP12C	CF/CM30C	1.00	0.92	0.94
TM9V080B12MP12C	XAF/XAUB30C	1.03	0.98	0.93
TM9V080B12MP12C	XAFB24B	1.00	0.95	0.92
TM9V080B12MP12C	XAFC30C	1.02	0.97	0.92
TM9V080B12MP12C	XAHB24B	0.99	0.93	0.91
TM9V080B12MP12C	XAHB30C	1.01	0.93	0.93
TM9V080B12MP12C	XAHC30C	1.02	0.97	0.92
TM9V080C16MP12C	CF/CM30C	1.02	1.02	0.96
TM9V080C16MP12C	XAFC30C	1.02	1.07	0.94

Table 24: Cool multiplier furnace - 2 ton

Furnace model	Indoor coil model	Total capacity	Sensible capacity	kW
TM9V080C16MP12C	XAHC30C	1.02	1.07	0.94
TM9V100C16MP12C	CF/CM30C	1.03	1.02	0.96
TM9V100C16MP12C	XAFC30C	1.03	1.07	0.95
TM9V100C16MP12C	XAHC30C	1.03	1.07	0.95
TM9Y040A10MP11	CF/CM/CU30B	0.97	0.86	0.93
TM9Y040A10MP11	CF/CM30A	0.98	0.9	0.98
TM9Y040A10MP11	XAF/XAUA24B	0.98	0.93	0.96
TM9Y040A10MP11	XAF/XAUB30C	1.00	0.92	0.92
TM9Y040A10MP11	XAFB24B	0.98	0.93	0.96
TM9Y040A10MP11	XAHA24B	0.98	0.93	0.96
TM9Y040A10MP11	XAHB24B	0.98	0.93	0.96
TM9Y040A10MP11	XAHB30C	1.01	0.97	0.97
TM9Y060B12MP11	CF/CM/CU30B	1.00	0.93	0.94
TM9Y060B12MP11	CF/CM30C	1.01	0.95	0.95
TM9Y060B12MP11	XAF/XAUB30C	1.03	0.99	0.95
TM9Y060B12MP11	XAFB24B	1.01	0.97	0.95
TM9Y060B12MP11	XAFC30C	1.02	0.99	0.94
TM9Y060B12MP11	XAHB24B	1.00	0.95	0.94
TM9Y060B12MP11	XAHB30C	1.02	0.98	0.94
TM9Y060B12MP11	XAHC30C	1.02	0.99	0.94
TM9Y080B12MP11	CF/CM/CU30B	1.01	0.95	0.95
TM9Y080B12MP11	CF/CM30C	1.02	0.97	0.96
TM9Y080B12MP11	XAF/XAUB30C	1.03	1.01	0.95
TM9Y080B12MP11	XAFB24B	1.01	0.98	0.93
TM9Y080B12MP11	XAFC30C	1.02	0.99	0.94
TM9Y080B12MP11	XAHB24B	1.01	0.98	0.93
TM9Y080B12MP11	XAHB30C	1.03	1.01	0.95
TM9Y080B12MP11	XAHC30C	1.02	0.99	0.94
TM9Y080C16MP11	CF/CM30C	1.02	0.97	0.96
TM9Y080C16MP11	XAFC30C	1.03	1.02	0.93
TM9Y080C16MP11	XAHC30C	1.03	1.02	0.93
TM9Y100C16MP11	CF/CM30C	1.02	0.97	0.96
TM9Y100C16MP11	XAFC30C	1.03	1.01	0.93
TM9Y100C16MP11	XAHC30C	1.03	1.01	0.95
TM9Y100C20MP11	XAHC30C	1.02	1.09	0.94
TMLE040A12MP11	CF/CM/CU30B	1.01	0.94	0.95
TMLE040A12MP11	CF/CM30A	1.00	0.92	0.94
TMLE040A12MP11	XAF/XAUA24B	1.00	0.95	0.92
TMLE040A12MP11	XAF/XAUB30C	1.02	0.98	0.92
TMLE040A12MP11	XAFB24B	1.01	0.96	0.93
TMLE040A12MP11	XAHA24B	1.00	0.95	0.92
TMLE040A12MP11	XAHB24B	1.01	0.97	0.93
TMLE040A12MP11	XAHB30C	1.02	0.98	0.92
TMLE060A12MP11	CF/CM/CU30B	1.01	0.94	0.95
TMLE060A12MP11	CF/CM30A	1.00	0.92	0.94
TMLE060A12MP11	XAF/XAUA24B	1.00	0.95	0.92
TMLE060A12MP11	XAF/XAUB30C	1.02	0.98	0.92
TMLE060A12MP11	XAFB24B	1.01	0.97	0.93
TMLE060A12MP11	XAHA24B	0.99	0.93	0.93
TMLE060A12MP11	XAHB24B	1.00	0.95	0.92
TMLE060A12MP11	XAHB30C	1.02	0.97	0.92
TMLE080B12MP11	CF/CM/CU30B	1.01	0.95	0.95
TMLE080B12MP11	CF/CM30C	1.02	0.96	0.96

Table 24: Cool multiplier furnace - 2 ton

Furnace model	Indoor coil model	Total capacity	Sensible capacity	kW
TMLE080B12MP11	XAF/XAUB30C	1.03	1.01	0.94
TMLE080B12MP11	XAFB24B	1.01	0.97	0.93
TMLE080B12MP11	XAFC30C	1.02	0.99	0.92
TMLE080B12MP11	XAHB24B	1.01	0.97	0.93
TMLE080B12MP11	XAHB30C	1.03	1	0.95
TMLE080B12MP11	XAHC30C	1.02	0.99	0.92
TMLE080C16MP11	CF/CM30C	1.03	1.03	0.95
TMLE080C16MP11	XAFC30C	1.03	1	0.94
TMLE080C16MP11	XAHC30C	1.03	1	0.94
TMLE100B12MP11	CF/CM/CU30B	1.01	0.95	0.95
TMLE100B12MP11	CF/CM30C	1.02	0.96	0.96
TMLE100B12MP11	XAF/XAUB30C	1.03	1.01	0.94
TMLE100B12MP11	XAFB24B	1.01	0.97	0.93
TMLE100B12MP11	XAFC30C	1.02	0.99	0.92
TMLE100B12MP11	XAHB24B	1.01	0.97	0.93
TMLE100B12MP11	XAHB30C	1.03	1	0.94
TMLE100B12MP11	XAHC30C	1.02	0.99	0.92
TMLE100C16MP11	CF/CM30C	1.01	0.94	0.95
TMLE100C16MP11	XAFC30C	1.03	0.98	0.93
TMLE100C16MP11	XAHC30C	1.03	0.98	0.93
TMLE120C16MP11	CF/CM30C	1.01	0.94	0.93
TMLE120C16MP11	XAFC30C	1.03	1	0.94
TMLE120C16MP11	XAHC30C	1.03	0.98	0.93
TMLV060A12MP12C	CF/CM/CU30B	1.00	0.92	0.94
TMLV060A12MP12C	CF/CM30A	0.99	0.91	0.93
TMLV060A12MP12C	XAF/XAUA24B	0.99	0.92	0.91
TMLV060A12MP12C	XAF/XAUB30C	1.02	0.97	0.92
TMLV060A12MP12C	XAFB24B	1.00	0.95	0.92
TMLV060A12MP12C	XAHA24B	0.99	0.92	0.91
TMLV060A12MP12C	XAHB24B	1.00	0.95	0.92
TMLV060A12MP12C	XAHB30C	1.02	0.97	0.92
TMLV100C16MP12C	CF/CM30C	1.03	1	0.96
TMLV100C16MP12C	XAFC30C	1.03	1.03	0.93
TMLV100C16MP12C	XAHC30C	1.03	1.03	0.95
TP9C060B12MP13C	CF/CM/CU30B	0.99	0.9	0.93
TP9C060B12MP13C	CF/CM30C	1.00	0.93	0.94
TP9C060B12MP13C	XAF/XAUB30C	1.03	0.99	0.95
TP9C060B12MP13C	XAFB24B	0.99	0.93	0.93
TP9C060B12MP13C	XAFC30C	1.02	0.99	0.94
TP9C060B12MP13C	XAHB24B	0.99	0.92	0.93
TP9C060B12MP13C	XAHB30C	1.00	0.91	0.92
TP9C060B12MP13C	XAHC30C	1.02	0.97	0.94
TP9C080B12MP13C	CF/CM/CU30B	1.00	0.92	0.94
TP9C080B12MP13C	CF/CM30C	1.00	0.92	0.94
TP9C080B12MP13C	XAF/XAUB30C	1.03	0.98	0.93
TP9C080B12MP13C	XAFB24B	1.00	0.95	0.92
TP9C080B12MP13C	XAFC30C	1.02	0.97	0.92
TP9C080B12MP13C	XAHB24B	0.99	0.93	0.91
TP9C080B12MP13C	XAHB30C	1.01	0.93	0.93
TP9C080B12MP13C	XAHC30C	1.02	0.97	0.92
TP9C080C16MP13C	CF/CM30C	1.02	1.02	0.96
TP9C080C16MP13C	XAFC30C	1.02	1.07	0.94
TP9C080C16MP13C	XAHC30C	1.02	1.07	0.94

Table 24: Cool multiplier furnace - 2 ton

Furnace model	Indoor coil model	Total capacity	Sensible capacity	kW
TP9C100C16MP13C	CF/CM30C	1.03	1.02	0.96
TP9C100C16MP13C	XAFC30C	1.03	1.07	0.95
TP9C100C16MP13C	XAHC30C	1.03	1.07	0.95
TPLC060A12MP13C	CF/CM/CU30B	1.00	0.92	0.94
TPLC060A12MP13C	CF/CM30A	0.99	0.91	0.93
TPLC060A12MP13C	XAF/XAUA24B	0.99	0.92	0.91
TPLC060A12MP13C	XAF/XAUB30C	1.02	0.97	0.92
TPLC060A12MP13C	XAFB24B	1.00	0.95	0.92
TPLC060A12MP13C	XAHA24B	0.99	0.92	0.91
TPLC060A12MP13C	XAHB24B	1.00	0.95	0.92
TPLC060A12MP13C	XAHB30C	1.02	0.97	0.92
TPLC080B12MP13C	CF/CM/CU30B	0.99	0.9	0.95
TPLC080B12MP13C	CF/CM30C	0.99	0.9	0.93
TPLC080B12MP13C	XAF/XAUB30C	1.01	0.94	0.93
TPLC080B12MP13C	XAFB24B	0.98	0.9	0.92
TPLC080B12MP13C	XAFC30C	1.01	0.94	0.93
TPLC080B12MP13C	XAHB24B	0.98	0.9	0.92
TPLC080B12MP13C	XAHB30C	1.01	0.94	0.93
TPLC080B12MP13C	XAHC30C	1.01	0.94	0.93
TPLC080C16MP13C	CF/CM30C	1.03	1	0.96
TPLC080C16MP13C	XAFC30C	1.03	1.03	0.93
TPLC080C16MP13C	XAHC30C	1.03	1.03	0.95
TPLC100C16MP13C	CF/CM30C	1.03	1	0.96
TPLC100C16MP13C	XAFC30C	1.03	1.03	0.93
TPLC100C16MP13C	XAHC30C	1.03	1.03	0.95
CP9C060B12MP13C	CF/CM/CU30B	0.99	0.9	0.93
CP9C060B12MP13C	CF/CM30C	1.00	0.93	0.94
CP9C060B12MP13C	XAF/XAUB30C	1.03	0.99	0.95
CP9C060B12MP13C	XAFB24B	0.99	0.93	0.93
CP9C060B12MP13C	XAFC30C	1.02	0.99	0.94
CP9C060B12MP13C	XAHB24B	0.99	0.92	0.93
CP9C060B12MP13C	XAHB30C	1.00	0.91	0.92
CP9C060B12MP13C	XAHC30C	1.02	0.97	0.94
CP9C080B12MP13C	CF/CM/CU30B	1.00	0.92	0.94
CP9C080B12MP13C	CF/CM30C	1.00	0.92	0.94
CP9C080B12MP13C	XAF/XAUB30C	1.03	0.98	0.93
CP9C080B12MP13C	XAFB24B	1.00	0.95	0.92
CP9C080B12MP13C	XAFC30C	1.02	0.97	0.92
CP9C080B12MP13C	XAHB24B	0.99	0.93	0.91
CP9C080B12MP13C	XAHB30C	1.01	0.93	0.93
CP9C080B12MP13C	XAHC30C	1.02	0.97	0.92
CP9C080C16MP13C	CF/CM30C	1.02	1.02	0.96
CP9C080C16MP13C	XAFC30C	1.02	1.07	0.94
CP9C080C16MP13C	XAHC30C	1.02	1.07	0.94
CP9C100C16MP13C	CF/CM30C	1.03	1.02	0.96
CP9C100C16MP13C	XAFC30C	1.03	1.07	0.95
CP9C100C16MP13C	XAHC30C	1.03	1.07	0.95
CPLC060A12MP13C	CF/CM/CU30B	1.00	0.92	0.94
CPLC060A12MP13C	CF/CM30A	0.99	0.91	0.93
CPLC060A12MP13C	XAF/XAUA24B	0.99	0.92	0.91
CPLC060A12MP13C	XAF/XAUB30C	1.02	0.97	0.92
CPLC060A12MP13C	XAFB24B	1.00	0.95	0.92
CPLC060A12MP13C	XAHA24B	0.99	0.92	0.91

Table 24: Cool multiplier furnace - 2 ton

Furnace model	Indoor coil model	Total capacity	Sensible capacity	kW
CPLC060A12MP13C	XAHB24B	1.00	0.95	0.92
CPLC060A12MP13C	XAHB30C	1.02	0.97	0.92
CPLC080B12MP13C	CF/CM/CU30B	0.99	0.9	0.95
CPLC080B12MP13C	CF/CM30C	0.99	0.9	0.93
CPLC080B12MP13C	XAF/XAUB30C	1.01	0.94	0.93
CPLC080B12MP13C	XAFB24B	0.98	0.9	0.92
CPLC080B12MP13C	XAFC30C	1.01	0.94	0.93
CPLC080B12MP13C	XAHB24B	0.98	0.9	0.92
CPLC080B12MP13C	XAHB30C	1.01	0.94	0.93
CPLC080B12MP13C	XAHC30C	1.01	0.94	0.93
CPLC080C16MP13C	CF/CM30C	1.03	1	0.96
CPLC080C16MP13C	XAFC30C	1.03	1.03	0.93
CPLC080C16MP13C	XAHC30C	1.03	1.03	0.95
CPLC100C16MP13C	CF/CM30C	1.03	1	0.96
CPLC100C16MP13C	XAFC30C	1.03	1.03	0.93
CPLC100C16MP13C	XAHC30C	1.03	1.03	0.95

Performance data - 2.5 ton

See the following tables for performance and multiplier data for the TCE2B30S21S unit.

Condenser only performance data - 2.5 ton

Table 25: TCE2B30S21S condenser table

Saturated suction at compressor		Outdoor ambient temperature															
Temperature	Pressure	55 °F		65 °F		75 °F		85 °F		95 °F		105 °F		115 °F		125 °F	
(°F)	(psig)	MBH	kW	MBH	kW	MBH	kW	MBH	kW	MBH	kW	MBH	kW	MBH	kW	MBH	kW
35	107	29.6	1.20	28.2	1.39	26.6	1.58	24.9	1.78	23.0	1.99	21.1	2.23	19.1	2.50	17.1	2.82
40	118	32.6	1.20	31.0	1.40	29.3	1.59	27.4	1.79	25.4	2.00	23.3	2.24	21.2	2.52	19.1	2.84
45	130	35.7	1.21	34.0	1.41	32.1	1.60	30.1	1.80	27.9	2.02	25.7	2.26	23.4	2.54	21.2	2.87
50	142	39.1	1.23	37.2	1.42	35.1	1.61	32.9	1.81	30.6	2.03	28.2	2.28	25.8	2.56	23.4	2.89
55	156	42.7	1.24	40.6	1.43	38.4	1.63	36.0	1.83	33.5	2.06	30.9	2.31	28.3	2.59	25.7	2.92

Condenser only performance data notes

- For outdoor unit (condenser) performance only. Data does not include the effects of air handler power or heat.
- Performance based on 15°F subcooling and 15°F superheat at the outdoor unit base valves:
  a. Increase capacity by 1% for each 2°F increase in subcooling.
  b. Decrease capacity by 1% for each 2°F decrease in subcooling.
- Maximum recommended condensing temperature is 140°F.

Cooling performance data - 2.5 ton

Table 26: Cooling performance data - TCE2B30S21S with indoor coil XAFB30CXXN1

Air temperature entering outdoor unit (°F)	IDCFM	800					1000					1200				
	ID DB (°F)	80	80	75	80	80	80	80	75	80	80	80	80	75	80	80
	ID WB (°F)	57	62	62	67	72	57	62	62	67	72	57	62	62	67	72
55	T.C.	28.7	30.0	29.8	31.5	33.5	30.4	31.2	31.1	33.6	35.4	31.5	32.2	31.9	34.9	36.7
	S.C.	28.7	25.7	21.7	20.9	16.2	30.4	28.5	23.9	23.4	18.4	31.5	30.6	25.5	25.0	19.6
	Kw	1.51	1.49	1.49	1.47	1.45	1.58	1.56	1.57	1.55	1.54	1.64	1.64	1.64	1.63	1.63
65	T.C.	27.7	29.8	29.6	32.4	35.1	29.5	30.8	30.6	33.5	36.2	30.8	31.2	31.2	34.1	36.8
	S.C.	27.7	25.4	21.5	21.5	17.4	29.5	28.1	23.4	23.3	18.5	30.8	30.0	25.0	24.9	19.4
	Kw	1.66	1.66	1.66	1.66	1.66	1.74	1.74	1.75	1.75	1.75	1.83	1.83	1.84	1.84	1.84
75	T.C.	26.8	28.7	28.6	31.3	34.2	28.5	29.6	29.5	32.3	35.1	29.7	29.9	30.1	32.9	35.7
	S.C.	26.8	24.6	20.8	20.7	16.7	28.5	27.3	22.7	22.6	17.8	29.7	29.3	24.3	24.2	18.7
	Kw	1.85	1.85	1.85	1.85	1.86	1.94	1.94	1.94	1.94	1.95	2.02	2.03	2.03	2.03	2.04
85	T.C.	25.8	27.4	27.4	30.0	32.8	27.4	28.1	28.2	30.8	33.6	28.5	28.6	28.7	31.4	34.2
	S.C.	25.8	24.0	20.2	20.1	16.0	27.4	26.5	22.0	21.9	17.1	28.5	28.6	23.6	23.5	18.1
	Kw	2.05	2.05	2.05	2.05	2.06	2.14	2.14	2.14	2.14	2.15	2.23	2.23	2.23	2.23	2.24
95	T.C.	25.2	26.4	26.4	28.9	31.6	26.7	26.8	27.1	29.7	32.4	27.8	27.9	27.5	30.2	32.9
	S.C.	25.2	24.0	20.0	20.0	15.9	26.7	26.3	21.9	21.9	17.1	27.8	27.9	23.6	23.6	18.1
	Kw	2.28	2.28	2.28	2.29	2.30	2.37	2.37	2.37	2.38	2.39	2.46	2.46	2.46	2.47	2.48
105	T.C.	24.0	24.7	24.8	27.3	29.9	25.4	25.4	25.4	28.0	30.6	26.4	26.4	25.8	28.4	31.0
	S.C.	24.0	23.1	19.2	19.2	15.2	25.4	25.4	21.2	21.1	16.3	26.4	26.4	22.8	22.8	17.3
	Kw	2.51	2.51	2.52	2.53	2.54	2.61	2.61	2.61	2.62	2.64	2.70	2.70	2.70	2.71	2.73
115	T.C.	22.7	22.9	23.2	25.5	28.0	23.9	23.9	23.7	26.1	28.6	24.9	24.8	23.9	26.4	28.9
	S.C.	22.7	22.1	18.5	18.4	14.4	23.9	23.9	20.4	20.4	15.6	24.9	24.8	22.0	22.0	16.5
	Kw	2.78	2.78	2.78	2.80	2.82	2.88	2.88	2.88	2.89	2.91	2.97	2.97	2.97	2.98	3.01

Table 26: Cooling performance data - TCE2B30S21S with indoor coil XAFB30CXXN1

Air temperature entering outdoor unit (°F)	IDCFM	800					1000					1200				
	ID DB (°F)	80	80	75	80	80	80	80	75	80	80	80	80	75	80	80
	ID WB (°F)	57	62	62	67	72	57	62	62	67	72	57	62	62	67	72
125	T.C.	21.6	21.4	21.4	23.2	24.7	22.8	22.8	21.9	24.2	25.9	23.7	23.9	22.3	24.9	26.9
	S.C.	21.6	21.4	18.0	17.3	12.2	22.8	22.8	20.2	19.6	13.7	23.7	23.9	22.2	21.4	14.9
	Kw	3.14	3.13	3.12	3.14	3.14	3.22	3.21	3.20	3.21	3.23	3.29	3.29	3.28	3.29	3.31

Cooling performance data notes

- All capacities include indoor fan heat. kW values are for the system (outdoor + indoor).
- Green shaded cells are ACCA (TVA) conditions.
- Blue shaded cells are AHRI conditions.

Multipliers for determining the performance with other indoor sections

ⓘ **Note:** For dry bulb temperatures different than those listed (between 73°F to 87°F), sensible capacity increases by 1060 BTUH per 1000 CFM per degree above the listed temperature and decreases by 1060 BTUH per 1000 CFM per degree below the listed temperature.

Cool multiplier airhandler - 2.5 ton

Table 27: Cool multiplier air handler - 2.5 ton

Air handler model	Indoor coil model	Total capacity	Sensible capacity	kW
—	CF/CM/CU30B	1.00	0.95	1.00
—	CF/CM/CU36B	1.00	0.96	1.00
—	CF/CM30C	1.00	0.95	1.00
—	CF/CM36C	1.00	0.96	1.00
—	XAF/XAUB36D	1.00	0.97	1.00
—	XAFC30C	1.00	1.00	1.00
—	XAFC36D	1.00	0.97	1.00
—	XAHB30C	1.00	1.00	1.00
—	XAHB36D	0.99	0.94	0.99
—	XAHC30C	1.00	1.00	1.00
—	XAHC36D	1.00	0.97	1.00
AE30BX21	—	1.02	0.94	0.96
AE36BX21	—	1.02	0.93	0.94
AE36CX21	—	1.03	0.98	0.95
AVC30BX21	—	1.01	0.93	0.95
AVC36BX21	—	1.02	0.94	0.94
AVC36CX21	—	1.03	0.96	0.95
JHETB30DXXS2N1	—	1.03	0.98	0.94
JHETB36DXXS2N1	—	1.03	1.06	0.97
JHETC36DXXS2N1	—	1.01	0.91	0.90
JHVTB36DXXC2N1	—	1.02	0.93	0.92
JHVTC36DXXC2N1	—	1.03	1.00	0.92
JMET12BS2N1A	XAF/XAUB30C	1.01	0.92	0.89
JMET12BS2N1A	XAF/XAUB36D	1.03	1.05	0.95
JMET12BS2N1A	XAHB30C	1.03	1.06	0.95
JMET12CS2N1A	XAFC30C	1.03	0.98	0.91
JMET12CS2N1A	XAFC36D	1.03	0.96	0.91

Table 27: Cool multiplier air handler - 2.5 ton

Air handler model	Indoor coil model	Total capacity	Sensible capacity	kW
JMET12CS2N1A	XAHC30C	1.03	0.98	0.93
JMET12CS2N1A	XAHC36D	1.03	0.96	0.91
JMET16CS2N1A	XAFC30C	1.03	0.98	0.91
JMET16CS2N1A	XAFC36D	1.03	0.96	0.92
JMET16CS2N1A	XAHC30C	1.03	0.98	0.91
JMET16CS2N1A	XAHC36D	1.03	0.95	0.91
JMVT12BC2N1A	XAF/XAUB30C	1.01	0.93	0.90
JMVT12BC2N1A	XAF/XAUB36D	1.03	0.95	0.93
JMVT12BC2N1A	XAHB30C	1.01	0.93	0.92
JMVT12BC2N1A	XAHB36D	1.03	0.95	0.93
JMVT16CC2N1A	XAFC30C	1.03	0.97	0.91
JMVT16CC2N1A	XAFC36D	1.03	0.98	0.92
JMVT16CC2N1A	XAHC30C	1.03	0.97	0.91
JMVT16CC2N1A	XAHC36D	1.03	0.98	0.92
JMVT17CC2N1A	XAFC30C	1.03	0.99	0.91
JMVT17CC2N1A	XAFC36D	1.03	0.98	0.92
JMVT17CC2N1A	XAHC30C	1.03	0.99	0.91
JMVT17CC2N1A	XAHC36D	1.03	0.99	0.92
ME12BN21	CF/CM30B	1.01	0.92	0.93
ME12BN21	CF/CM36B	1.01	0.92	0.93
ME12CN21	CF/CM30C	1.02	0.95	0.96
ME12CN21	CF/CM36C	1.03	0.97	0.95
ME16CN21	CF/CM30C	1.01	0.92	0.93
ME16CN21	CF/CM36C	1.01	0.92	0.93
MVC12BN21	CF/CM30B	1.01	0.91	0.93
MVC12BN21	CF/CM36B	1.03	0.96	0.95
MVC12CN21	CF/CM30C	1.02	0.96	0.94
MVC12CN21	CF/CM36C	1.03	0.98	0.95
MVC16CN21	CF/CM30C	1.02	0.96	0.94
MVC16CN21	CF/CM36C	1.03	1.00	0.95

Cool multiplier furnace - 2.5 ton

Table 28: Cool multiplier furnace - 2.5 ton

Furnace model	Indoor coil model	Total capacity	Sensitive capacity	kW
TL8E060A12UH11	CF/CM/CU30B	1.01	0.92	0.95
TL8E060A12UH11	CF/CM/CU36B	1.00	0.92	0.94
TL8E060A12UH11	XAF/XAUB30C	1.01	0.96	0.95
TL8E060A12UH11	XAF/XAUB36D	1.02	0.95	0.96
TL8E060A12UH11	XAHB30C	1.00	0.95	0.94
TL8E060A12UH11	XAHB36D	1.00	0.93	0.94
TL8E080C16UH11	CF/CM30C	1.02	0.94	0.96
TL8E080C16UH11	CF/CM36C	1.02	0.94	0.96
TL8E080C16UH11	XAFC30C	1.03	0.98	0.95
TL8E080C16UH11	XAFC36D	1.03	0.95	0.95
TL8E080C16UH11	XAHC30C	1.03	0.98	0.95
TL8E080C16UH11	XAHC36D	1.03	0.95	0.95
TL8E100C20UH11	CF/CM30C	1.00	0.89	0.92
TL8E100C20UH11	CF/CM36C	1.01	0.90	0.93
TL8E100C20UH11	XAFC30C	1.01	0.93	0.92
TL8E100C20UH11	XAFC36D	1.01	0.91	0.92
TL8E100C20UH11	XAHC30C	1.01	0.92	0.91
TL8E100C20UH11	XAHC36D	1.01	0.91	0.92

Table 28: Cool multiplier furnace - 2.5 ton

Furnace model	Indoor coil model	Total capacity	Sensitive capacity	kW
TL9E060B12UH11	CF/CM/CU30B	1.01	0.93	0.97
TL9E060B12UH11	CF/CM/CU36B	1.01	0.93	0.97
TL9E060B12UH11	CF/CM30C	0.99	0.92	0.95
TL9E060B12UH11	CF/CM36C	1.01	0.94	0.97
TL9E060B12UH11	XAF/XAUB30C	1.02	0.98	0.98
TL9E060B12UH11	XAF/XAUB36D	1.02	0.95	0.98
TL9E060B12UH11	XAFC30C	1.01	0.97	0.97
TL9E060B12UH11	XAFC36D	1.02	0.96	0.98
TL9E060B12UH11	XAHB30C	1.01	0.97	0.97
TL9E060B12UH11	XAHB36D	1.01	0.94	0.99
TL9E060B12UH11	XAHC30C	1.00	0.96	0.96
TL9E060B12UH11	XAHC36D	1.01	0.95	0.97
TL9E080C16UH11	CF/CM30C	1.02	0.94	0.96
TL9E080C16UH11	CF/CM36C	1.02	0.95	0.96
TL9E080C16UH11	XAFC30C	1.03	0.99	0.95
TL9E080C16UH11	XAFC36D	1.03	0.96	0.95
TL9E080C16UH11	XAHC30C	1.02	0.98	0.94
TL9E080C16UH11	XAHC36D	1.03	0.96	0.95
TL9E100C20UH11	CF/CM30C	1.02	0.94	0.94
TL9E100C20UH11	CF/CM36C	1.03	0.95	0.95
TL9E100C20UH11	XAFC30C	1.03	0.98	0.95
TL9E100C20UH11	XAFC36D	1.03	0.95	0.95
TL9E100C20UH11	XAHC30C	1.02	0.96	0.94
TL9E100C20UH11	XAHC36D	1.02	0.94	0.94
TM8E040A12MP11	CF/CM/CU30B	1.00	0.91	0.94
TM8E040A12MP11	CF/CM/CU36B	1.00	0.92	0.94
TM8E040A12MP11	XAF/XAUB30C	1.01	0.95	0.93
TM8E040A12MP11	XAF/XAUB36D	1.00	0.92	0.92
TM8E040A12MP11	XAHB30C	0.99	0.92	0.93
TM8E040A12MP11	XAHB36D	0.99	0.90	0.93
TM8E060A12MP11	CF/CM/CU30B	1.00	0.91	0.94
TM8E060A12MP11	CF/CM/CU36B	1.00	0.92	0.94
TM8E060A12MP11	XAF/XAUB30C	1.01	0.95	0.93
TM8E060A12MP11	XAF/XAUB36D	1.00	0.92	0.92
TM8E060A12MP11	XAHB30C	0.99	0.93	0.93
TM8E060A12MP11	XAHB36D	0.99	0.91	0.93
TM8E080B12MP11	CF/CM/CU30B	1.01	0.92	0.95
TM8E080B12MP11	CF/CM/CU36B	1.01	0.93	0.95
TM8E080B12MP11	CF/CM30C	1.01	0.92	0.95
TM8E080B12MP11	CF/CM36C	1.00	0.92	0.94
TM8E080B12MP11	XAF/XAUB30C	1.02	0.97	0.94
TM8E080B12MP11	XAF/XAUB36D	1.02	0.94	0.94
TM8E080B12MP11	XAFC30C	1.01	0.95	0.93
TM8E080B12MP11	XAFC36D	1.00	0.92	0.92
TM8E080B12MP11	XAHB30C	1.01	0.95	0.95
TM8E080B12MP11	XAHB36D	1.01	0.93	0.95
TM8E080B12MP11	XAHC30C	1.01	0.95	0.93
TM8E080B12MP11	XAHC36D	1.00	0.92	0.92
TM8E080C16MP11	CF/CM30C	1.01	0.93	0.95
TM8E080C16MP11	CF/CM36C	1.02	0.94	0.94
TM8E080C16MP11	XAFC30C	1.02	0.96	0.94
TM8E080C16MP11	XAFC36D	1.02	0.94	0.94
TM8E080C16MP11	XAHC30C	1.01	0.95	0.93

Table 28: Cool multiplier furnace - 2.5 ton

Furnace model	Indoor coil model	Total capacity	Sensitive capacity	kW
TM8E080C16MP11	XAHC36D	1.02	0.94	0.94
TM8E080C20MP11	CF/CM30C	1.02	0.98	0.94
TM8E080C20MP11	CF/CM36C	1.03	0.99	0.95
TM8E080C20MP11	XAFC30C	1.03	1.02	0.95
TM8E080C20MP11	XAFC36D	1.03	1.00	0.95
TM8E080C20MP11	XAHC30C	1.03	1.01	0.95
TM8E080C20MP11	XAHC36D	1.03	0.99	0.95
TM8E100B12MP11	CF/CM/CU30B	1.01	0.94	0.95
TM8E100B12MP11	CF/CM/CU36B	1.02	0.95	0.96
TM8E100B12MP11	CF/CM30C	1.01	0.94	0.95
TM8E100B12MP11	CF/CM36C	1.01	0.95	0.95
TM8E100B12MP11	XAF/XAUB30C	1.03	0.99	0.97
TM8E100B12MP11	XAF/XAUB36D	1.03	0.97	0.97
TM8E100B12MP11	XAFC30C	1.01	0.98	0.95
TM8E100B12MP11	XAFC36D	1.02	0.97	0.94
TM8E100B12MP11	XAHB30C	1.02	0.98	0.96
TM8E100B12MP11	XAHB36D	1.02	0.95	0.96
TM8E100B12MP11	XAHC30C	1.01	0.98	0.95
TM8E100B12MP11	XAHC36D	1.02	0.96	0.96
TM8E100C16MP11	CF/CM30C	1.01	0.93	0.95
TM8E100C16MP11	CF/CM36C	1.02	0.94	0.94
TM8E100C16MP11	XAFC30C	1.03	0.98	0.95
TM8E100C16MP11	XAFC36D	1.03	0.95	0.95
TM8E100C16MP11	XAHC30C	1.02	0.97	0.94
TM8E100C16MP11	XAHC36D	1.02	0.94	0.94
TM8E100C20MP11	CF/CM30C	1.02	0.98	0.96
TM8E100C20MP11	CF/CM36C	1.03	0.99	0.95
TM8E100C20MP11	XAFC30C	1.03	1.02	0.95
TM8E100C20MP11	XAFC36D	1.03	1.00	0.95
TM8E100C20MP11	XAHC30C	1.03	1.01	0.95
TM8E100C20MP11	XAHC36D	1.03	1.00	0.95
TM8E120C16MP11	CF/CM30C	1.02	0.94	0.96
TM8E120C16MP11	CF/CM36C	1.03	0.95	0.95
TM8E120C16MP11	XAFC30C	1.03	0.98	0.95
TM8E120C16MP11	XAFC36D	1.03	0.95	0.95
TM8E120C16MP11	XAHC30C	1.03	0.98	0.95
TM8E120C16MP11	XAHC36D	1.03	0.95	0.95
TM8E120C20MP11	CF/CM30C	1.02	0.99	0.96
TM8E120C20MP11	CF/CM36C	1.03	1.00	0.95
TM8E120C20MP11	XAFC30C	1.03	1.04	0.95
TM8E120C20MP11	XAFC36D	1.03	1.02	0.95
TM8E120C20MP11	XAHC30C	1.03	1.03	0.95
TM8E120C20MP11	XAHC36D	1.03	1.01	0.95
TM8V060A12MP12C	CF/CM/CU30B	0.98	0.89	0.92
TM8V060A12MP12C	CF/CM/CU36B	0.99	0.90	0.93
TM8V060A12MP12C	XAF/XAUB30C	0.99	0.93	0.92
TM8V060A12MP12C	XAF/XAUB36D	1.00	0.92	0.92
TM8V060A12MP12C	XAHB30C	0.99	0.93	0.93
TM8V060A12MP12C	XAHB36D	1.00	0.92	0.94
TM8V080B12MP12C	CF/CM/CU30B	0.99	0.88	0.95
TM8V080B12MP12C	CF/CM/CU36B	0.99	0.89	0.95
TM8V080B12MP12C	CF/CM30C	0.97	0.86	0.93
TM8V080B12MP12C	CF/CM36C	0.97	0.87	0.93

Table 28: Cool multiplier furnace - 2.5 ton

Furnace model	Indoor coil model	Total capacity	Sensitive capacity	kW
TM8V080B12MP12C	XAF/XAUB30C	1.00	0.93	0.94
TM8V080B12MP12C	XAF/XAUB36D	1.01	0.92	0.95
TM8V080B12MP12C	XAFC30C	0.98	0.91	0.92
TM8V080B12MP12C	XAFC36D	0.99	0.90	0.93
TM8V080B12MP12C	XAHB30C	1.00	0.93	0.96
TM8V080B12MP12C	XAHB36D	1.01	0.92	0.99
TM8V080B12MP12C	XAHC30C	0.98	0.91	0.94
TM8V080B12MP12C	XAHC36D	0.99	0.90	0.93
TM8V080C16MP12C	CF/CM30C	1.00	0.89	0.94
TM8V080C16MP12C	CF/CM36C	1.01	0.91	0.95
TM8V080C16MP12C	XAFC30C	1.01	0.93	0.93
TM8V080C16MP12C	XAFC36D	1.01	0.92	0.93
TM8V080C16MP12C	XAHC30C	1.01	0.93	0.93
TM8V080C16MP12C	XAHC36D	1.01	0.92	0.93
TM8V100C16MP12C	CF/CM30C	1.00	0.89	0.94
TM8V100C16MP12C	CF/CM36C	1.01	0.91	0.95
TM8V100C16MP12C	XAFC30C	1.01	0.93	0.93
TM8V100C16MP12C	XAFC36D	1.01	0.92	0.93
TM8V100C16MP12C	XAHC30C	1.01	0.93	0.93
TM8V100C16MP12C	XAHC36D	1.01	0.92	0.93
TM8V100C20MP12C	CF/CM30C	1.02	0.99	0.96
TM8V100C20MP12C	CF/CM36C	1.03	1.00	0.97
TM8V100C20MP12C	XAFC30C	1.03	1.04	0.95
TM8V100C20MP12C	XAFC36D	1.03	1.02	0.97
TM8V100C20MP12C	XAHC30C	1.03	1.03	0.97
TM8V100C20MP12C	XAHC36D	1.03	1.02	0.97
TM8V120C20MP12C	CF/CM30C	1.02	0.99	0.96
TM8V120C20MP12C	CF/CM36C	1.03	1.00	0.97
TM8V120C20MP12C	XAFC30C	1.03	1.04	0.95
TM8V120C20MP12C	XAFC36D	1.03	1.02	0.97
TM8V120C20MP12C	XAHC30C	1.03	1.03	0.97
TM8V120C20MP12C	XAHC36D	1.03	1.02	0.97
TM8Y060A12MP11	CF/CM/CU30B	0.97	0.85	0.91
TM8Y060A12MP11	CF/CM/CU36B	0.97	0.86	0.91
TM8Y060A12MP11	XAF/XAUB30C	0.98	0.90	0.90
TM8Y060A12MP11	XAF/XAUB36D	1.02	0.98	0.98
TM8Y060A12MP11	XAHB30C	1.01	0.99	0.97
TM8Y060A12MP11	XAHB36D	1.02	0.97	1.00
TM8Y080B12MP11	CF/CM/CU30B	0.99	0.88	0.93
TM8Y080B12MP11	CF/CM/CU36B	0.99	0.89	0.93
TM8Y080B12MP11	CF/CM30C	0.98	0.88	0.92
TM8Y080B12MP11	CF/CM36C	0.98	0.88	0.92
TM8Y080B12MP11	XAF/XAUB30C	1.01	0.93	0.93
TM8Y080B12MP11	XAF/XAUB36D	1.01	0.91	0.93
TM8Y080B12MP11	XAFC30C	0.99	0.91	0.91
TM8Y080B12MP11	XAFC36D	0.99	0.90	0.92
TM8Y080B12MP11	XAHB30C	1.00	0.92	0.92
TM8Y080B12MP11	XAHB36D	1.01	0.91	0.93
TM8Y080B12MP11	XAHC30C	0.99	0.91	0.91
TM8Y080B12MP11	XAHC36D	0.99	0.89	0.91
TM8Y080C16MP11	XAFC30C	1.03	1.00	0.95
TM8Y080C16MP11	XAFC36D	1.03	0.98	0.95
TM8Y080C16MP11	XAHC30C	1.03	1.00	0.95

Table 28: Cool multiplier furnace - 2.5 ton

Furnace model	Indoor coil model	Total capacity	Sensitive capacity	kW
TM8Y080C16MP11	XAHC36D	1.03	0.97	0.95
TM8Y100C16MP11	XAFC30C	1.03	1.00	0.95
TM8Y100C16MP11	XAFC36D	1.03	0.98	0.95
TM8Y100C16MP11	XAHC30C	1.03	1.00	0.95
TM8Y100C16MP11	XAHC36D	1.03	0.97	0.95
TM8Y100C20MP11	CF/CM30C	1.02	0.97	0.94
TM8Y100C20MP11	CF/CM36C	1.03	0.98	0.95
TM8Y100C20MP11	XAFC30C	1.03	1.01	0.95
TM8Y100C20MP11	XAFC36D	1.03	0.99	0.95
TM8Y100C20MP11	XAHC30C	1.03	1.01	0.95
TM8Y100C20MP11	XAHC36D	1.03	0.98	0.95
TM8Y120C20MP11	CF/CM30C	1.02	0.97	0.94
TM8Y120C20MP11	CF/CM36C	1.03	0.98	0.95
TM8Y120C20MP11	XAFC30C	1.03	1.01	0.95
TM8Y120C20MP11	XAFC36D	1.03	0.99	0.95
TM8Y120C20MP11	XAHC30C	1.03	1.01	0.95
TM8Y120C20MP11	XAHC36D	1.03	0.98	0.95
TM9E040A10MP12	CF/CM/CU30B	0.99	0.92	0.99
TM9E040A10MP12	CF/CM/CU36B	0.99	0.92	0.99
TM9E040A10MP12	XAF/XAUB30C	1.00	0.97	1.00
TM9E040A10MP12	XAF/XAUB36D	0.98	0.92	0.96
TM9E040A10MP12	XAHB30C	0.97	0.92	0.97
TM9E040A10MP12	XAHB36D	0.98	0.91	0.96
TM9E060A10MP12	CF/CM/CU30B	0.99	0.92	0.97
TM9E060A10MP12	CF/CM/CU36B	1.00	0.93	0.98
TM9E060A10MP12	XAF/XAUB30C	1.00	0.96	0.96
TM9E060A10MP12	XAF/XAUB36D	1.01	0.96	0.97
TM9E060A10MP12	XAHB30C	0.99	0.95	0.99
TM9E060A10MP12	XAHB36D	1.01	0.94	0.99
TM9E060B12MP12	CF/CM/CU30B	0.99	0.89	0.95
TM9E060B12MP12	CF/CM/CU36B	0.99	0.89	0.93
TM9E060B12MP12	CF/CM30C	0.97	0.87	0.93
TM9E060B12MP12	CF/CM36C	0.97	0.87	0.91
TM9E060B12MP12	XAF/XAUB30C	1.01	0.93	0.95
TM9E060B12MP12	XAF/XAUB36D	1.01	0.91	0.95
TM9E060B12MP12	XAFC30C	0.99	0.92	0.93
TM9E060B12MP12	XAFC36D	0.99	0.89	0.93
TM9E060B12MP12	XAHB30C	1.00	0.92	0.94
TM9E060B12MP12	XAHB36D	1.02	0.97	1.00
TM9E060B12MP12	XAHC30C	0.98	0.90	0.92
TM9E060B12MP12	XAHC36D	0.99	0.89	0.93
TM9E080B12MP12	CF/CM/CU30B	0.99	0.87	0.93
TM9E080B12MP12	CF/CM/CU36B	0.99	0.88	0.93
TM9E080B12MP12	CF/CM30C	0.97	0.85	0.91
TM9E080B12MP12	CF/CM36C	0.97	0.86	0.91
TM9E080B12MP12	XAF/XAUB30C	1.02	0.98	0.96
TM9E080B12MP12	XAF/XAUB36D	1.02	0.95	0.96
TM9E080B12MP12	XAFC30C	1.01	0.96	0.95
TM9E080B12MP12	XAFC36D	1.02	0.96	0.96
TM9E080B12MP12	XAHB30C	1.01	0.96	0.95
TM9E080B12MP12	XAHB36D	1.01	0.94	0.95
TM9E080B12MP12	XAHC30C	1.01	0.96	0.95
TM9E080B12MP12	XAHC36D	1.02	0.95	0.96

Table 28: Cool multiplier furnace - 2.5 ton

Furnace model	Indoor coil model	Total capacity	Sensitive capacity	kW
TM9E080C16MP12	CF/CM30C	1.02	0.94	0.96
TM9E080C16MP12	CF/CM36C	1.02	0.94	0.96
TM9E080C16MP12	XAFC30C	1.03	0.98	0.95
TM9E080C16MP12	XAFC36D	1.03	0.96	0.95
TM9E080C16MP12	XAHC30C	1.02	0.97	0.94
TM9E080C16MP12	XAHC36D	1.03	0.95	0.95
TM9E080C20MP12	CF/CM30C	1.02	0.97	0.96
TM9E080C20MP12	CF/CM36C	1.03	0.98	0.95
TM9E080C20MP12	XAFC30C	1.03	1.01	0.95
TM9E080C20MP12	XAFC36D	1.03	1.00	0.95
TM9E080C20MP12	XAHC30C	1.03	1.01	0.95
TM9E080C20MP12	XAHC36D	1.03	0.99	0.95
TM9E100C16MP12	CF/CM30C	1.01	0.93	0.95
TM9E100C16MP12	CF/CM36C	1.02	0.94	0.94
TM9E100C16MP12	XAFC30C	1.02	0.96	0.94
TM9E100C16MP12	XAFC36D	1.02	0.94	0.94
TM9E100C16MP12	XAHC30C	1.01	0.95	0.93
TM9E100C16MP12	XAHC36D	1.02	0.94	0.94
TM9E100C20MP12	CF/CM30C	1.02	0.96	0.96
TM9E100C20MP12	CF/CM36C	1.03	0.97	0.95
TM9E100C20MP12	XAFC30C	1.03	1.01	0.95
TM9E100C20MP12	XAFC36D	1.03	0.99	0.95
TM9E100C20MP12	XAHC30C	1.03	1.01	0.95
TM9E100C20MP12	XAHC36D	1.03	0.98	0.95
TM9V040A10MP12C	CF/CM/CU30B	0.95	0.84	0.95
TM9V040A10MP12C	CF/CM/CU36B	0.96	0.86	0.94
TM9V040A10MP12C	XAF/XAUB30C	0.97	0.89	0.97
TM9V040A10MP12C	XAF/XAUB36D	0.97	0.88	0.95
TM9V040A10MP12C	XAHB30C	0.97	0.89	0.97
TM9V040A10MP12C	XAHB36D	0.97	0.89	0.95
TM9V060B12MP12C	CF/CM/CU30B	0.99	0.87	0.95
TM9V060B12MP12C	CF/CM/CU36B	0.99	0.88	0.95
TM9V060B12MP12C	CF/CM30C	0.97	0.85	0.91
TM9V060B12MP12C	CF/CM36C	0.97	0.86	0.91
TM9V060B12MP12C	XAF/XAUB30C	1.00	0.92	0.94
TM9V060B12MP12C	XAF/XAUB36D	1.01	0.91	0.95
TM9V060B12MP12C	XAFC30C	0.98	0.90	0.92
TM9V060B12MP12C	XAFC36D	0.99	0.89	0.93
TM9V060B12MP12C	XAHB30C	1.00	0.92	0.94
TM9V060B12MP12C	XAHB36D	1.00	0.91	0.94
TM9V060B12MP12C	XAHC30C	0.98	0.90	0.92
TM9V060B12MP12C	XAHC36D	0.99	0.89	0.93
TM9V080B12MP12C	CF/CM/CU30B	0.99	0.88	0.93
TM9V080B12MP12C	CF/CM/CU36B	0.99	0.89	0.93
TM9V080B12MP12C	CF/CM30C	0.97	0.86	0.91
TM9V080B12MP12C	CF/CM36C	0.98	0.87	0.92
TM9V080B12MP12C	XAF/XAUB30C	1.01	0.93	0.93
TM9V080B12MP12C	XAF/XAUB36D	1.01	0.92	0.93
TM9V080B12MP12C	XAFC30C	0.99	0.91	0.91
TM9V080B12MP12C	XAFC36D	0.99	0.90	0.92
TM9V080B12MP12C	XAHB30C	1.01	0.93	0.95
TM9V080B12MP12C	XAHB36D	1.01	0.92	0.95
TM9V080B12MP12C	XAHC30C	0.99	0.91	0.91

Table 28: Cool multiplier furnace - 2.5 ton

Furnace model	Indoor coil model	Total capacity	Sensitive capacity	kW
TM9V080B12MP12C	XAHC36D	0.99	0.90	0.92
TM9V080C16MP12C	CF/CM30C	1.01	0.93	0.95
TM9V080C16MP12C	CF/CM36C	1.01	0.94	0.95
TM9V080C16MP12C	XAFC30C	1.02	0.98	0.96
TM9V080C16MP12C	XAFC36D	1.03	0.97	0.97
TM9V080C16MP12C	XAHC30C	1.02	0.98	0.96
TM9V080C16MP12C	XAHC36D	1.03	0.97	0.97
TM9V100C16MP12C	CF/CM30C	1.01	0.92	0.95
TM9V100C16MP12C	CF/CM36C	1.01	0.92	0.95
TM9V100C16MP12C	XAFC30C	1.02	0.97	0.94
TM9V100C16MP12C	XAFC36D	1.03	0.95	0.95
TM9V100C16MP12C	XAHC30C	1.02	0.97	0.94
TM9V100C16MP12C	XAHC36D	1.02	0.94	0.94
TM9V100C20MP12C	CF/CM30C	1.02	1.00	0.98
TM9V100C20MP12C	CF/CM36C	1.03	1.01	0.97
TM9V100C20MP12C	XAFC30C	1.03	1.05	0.99
TM9V100C20MP12C	XAFC36D	1.03	1.04	0.99
TM9V100C20MP12C	XAHC30C	1.03	1.05	0.99
TM9V100C20MP12C	XAHC36D	1.03	1.03	0.99
TM9Y040A10MP11	CF/CM/CU30B	0.95	0.86	0.95
TM9Y040A10MP11	CF/CM/CU36B	0.96	0.87	0.96
TM9Y040A10MP11	XAF/XAUB30C	0.97	0.91	0.97
TM9Y060B12MP11	CF/CM/CU30B	0.99	0.88	0.95
TM9Y060B12MP11	CF/CM/CU36B	0.99	0.89	0.95
TM9Y060B12MP11	CF/CM30C	0.97	0.87	0.93
TM9Y060B12MP11	CF/CM36C	0.98	0.88	0.92
TM9Y060B12MP11	XAF/XAUB30C	1.01	0.93	0.95
TM9Y060B12MP11	XAF/XAUB36D	1.01	0.91	0.95
TM9Y060B12MP11	XAFC30C	0.99	0.92	0.93
TM9Y060B12MP11	XAFC36D	0.99	0.90	0.93
TM9Y060B12MP11	XAHB30C	1.00	0.92	0.94
TM9Y060B12MP11	XAHB36D	1.01	0.91	0.95
TM9Y060B12MP11	XAHC30C	0.99	0.92	0.93
TM9Y060B12MP11	XAHC36D	0.99	0.89	0.93
TM9Y080B12MP11	CF/CM/CU30B	1.00	0.91	0.94
TM9Y080B12MP11	CF/CM/CU36B	1.01	0.92	0.95
TM9Y080B12MP11	CF/CM30C	0.98	0.89	0.92
TM9Y080B12MP11	CF/CM36C	0.99	0.90	0.93
TM9Y080B12MP11	XAF/XAUB30C	1.01	0.95	0.95
TM9Y080B12MP11	XAF/XAUB36D	1.01	0.93	0.95
TM9Y080B12MP11	XAFC30C	0.99	0.93	0.92
TM9Y080B12MP11	XAFC36D	0.99	0.91	0.93
TM9Y080B12MP11	XAHB30C	1.01	0.94	0.95
TM9Y080B12MP11	XAHB36D	1.01	0.92	0.95
TM9Y080B12MP11	XAHC30C	0.99	0.92	0.93
TM9Y080B12MP11	XAHC36D	0.99	0.91	0.93
TM9Y080C16MP11	CF/CM30C	0.99	0.87	0.93
TM9Y080C16MP11	CF/CM36C	0.99	0.88	0.93
TM9Y080C16MP11	XAFC30C	1.03	1.00	0.97
TM9Y080C16MP11	XAFC36D	1.03	0.97	0.97
TM9Y080C16MP11	XAHC30C	1.03	1.00	0.97
TM9Y080C16MP11	XAHC36D	1.03	0.97	0.97
TM9Y100C16MP11	CF/CM30C	0.99	0.87	0.93

Table 28: Cool multiplier furnace - 2.5 ton

Furnace model	Indoor coil model	Total capacity	Sensitive capacity	kW
TM9Y100C16MP11	CF/CM36C	0.99	0.88	0.93
TM9Y100C16MP11	XAFC30C	1.03	1.00	0.95
TM9Y100C16MP11	XAFC36D	1.03	0.97	0.95
TM9Y100C16MP11	XAHC30C	1.03	0.99	0.97
TM9Y100C16MP11	XAHC36D	1.03	0.97	0.97
TM9Y100C20MP11	CF/CM30C	1.02	0.96	0.96
TM9Y100C20MP11	CF/CM36C	1.02	0.96	0.96
TM9Y100C20MP11	XAFC30C	1.03	1.00	0.97
TM9Y100C20MP11	XAFC36D	1.03	0.97	0.97
TM9Y100C20MP11	XAHC30C	1.03	0.99	0.97
TM9Y100C20MP11	XAHC36D	1.03	0.97	0.97
TMLE040A12MP11	CF/CM/CU30B	1.00	0.91	0.94
TMLE040A12MP11	CF/CM/CU36B	1.00	0.92	0.94
TMLE040A12MP11	XAF/XAUB30C	1.01	0.95	0.93
TMLE040A12MP11	XAF/XAUB36D	1.00	0.92	0.92
TMLE040A12MP11	XAHB30C	0.99	0.92	0.93
TMLE040A12MP11	XAHB36D	0.99	0.90	0.93
TMLE060A12MP11	CF/CM/CU30B	1.00	0.91	0.94
TMLE060A12MP11	CF/CM/CU36B	1.00	0.92	0.94
TMLE060A12MP11	XAF/XAUB30C	1.01	0.95	0.93
TMLE060A12MP11	XAF/XAUB36D	1.00	0.92	0.92
TMLE060A12MP11	XAHB30C	0.99	0.93	0.93
TMLE060A12MP11	XAHB36D	0.99	0.91	0.93
TMLE080B12MP11	CF/CM/CU30B	1.01	0.92	0.95
TMLE080B12MP11	CF/CM/CU36B	1.01	0.93	0.95
TMLE080B12MP11	CF/CM30C	1.01	0.92	0.95
TMLE080B12MP11	CF/CM36C	1.00	0.92	0.94
TMLE080B12MP11	XAF/XAUB30C	1.02	0.97	0.94
TMLE080B12MP11	XAF/XAUB36D	1.02	0.94	0.94
TMLE080B12MP11	XAFC30C	1.01	0.95	0.93
TMLE080B12MP11	XAFC36D	1.00	0.92	0.92
TMLE080B12MP11	XAHB30C	1.01	0.95	0.95
TMLE080B12MP11	XAHB36D	1.01	0.93	0.95
TMLE080B12MP11	XAHC30C	1.01	0.95	0.93
TMLE080B12MP11	XAHC36D	1.00	0.92	0.92
TMLE080C16MP11	CF/CM30C	1.01	0.93	0.95
TMLE080C16MP11	CF/CM36C	1.02	0.94	0.94
TMLE080C16MP11	XAFC30C	1.02	0.96	0.94
TMLE080C16MP11	XAFC36D	1.02	0.94	0.94
TMLE080C16MP11	XAHC30C	1.01	0.95	0.93
TMLE080C16MP11	XAHC36D	1.02	0.94	0.94
TMLE080C20MP11	CF/CM30C	1.02	0.98	0.94
TMLE080C20MP11	CF/CM36C	1.03	0.99	0.95
TMLE080C20MP11	XAFC30C	1.03	1.02	0.95
TMLE080C20MP11	XAFC36D	1.03	1.00	0.95
TMLE080C20MP11	XAHC30C	1.03	1.01	0.95
TMLE080C20MP11	XAHC36D	1.03	0.99	0.95
TMLE100B12MP11	CF/CM/CU30B	1.01	0.94	0.95
TMLE100B12MP11	CF/CM/CU36B	1.02	0.95	0.96
TMLE100B12MP11	CF/CM30C	1.01	0.94	0.95
TMLE100B12MP11	CF/CM36C	1.01	0.95	0.95
TMLE100B12MP11	XAF/XAUB30C	1.03	0.99	0.97
TMLE100B12MP11	XAF/XAUB36D	1.03	0.97	0.97

Table 28: Cool multiplier furnace - 2.5 ton

Furnace model	Indoor coil model	Total capacity	Sensitive capacity	kW
TMLE100B12MP11	XAFC30C	1.01	0.98	0.95
TMLE100B12MP11	XAFC36D	1.02	0.97	0.94
TMLE100B12MP11	XAHB30C	1.02	0.98	0.96
TMLE100B12MP11	XAHB36D	1.02	0.95	0.96
TMLE100B12MP11	XAHC30C	1.01	0.98	0.95
TMLE100B12MP11	XAHC36D	1.02	0.96	0.96
TMLE100C16MP11	CF/CM30C	1.01	0.93	0.95
TMLE100C16MP11	CF/CM36C	1.02	0.94	0.94
TMLE100C16MP11	XAFC30C	1.03	0.98	0.95
TMLE100C16MP11	XAFC36D	1.03	0.95	0.95
TMLE100C16MP11	XAHC30C	1.02	0.97	0.94
TMLE100C16MP11	XAHC36D	1.02	0.94	0.94
TMLE100C20MP11	CF/CM30C	1.02	0.98	0.96
TMLE100C20MP11	CF/CM36C	1.03	0.99	0.95
TMLE100C20MP11	XAFC30C	1.03	1.02	0.95
TMLE100C20MP11	XAFC36D	1.03	1.00	0.95
TMLE100C20MP11	XAHC30C	1.03	1.01	0.95
TMLE100C20MP11	XAHC36D	1.03	1.00	0.95
TMLE120C16MP11	CF/CM30C	1.02	0.94	0.96
TMLE120C16MP11	CF/CM36C	1.03	0.95	0.95
TMLE120C16MP11	XAFC30C	1.03	0.98	0.95
TMLE120C16MP11	XAFC36D	1.03	0.95	0.95
TMLE120C16MP11	XAHC30C	1.03	0.98	0.95
TMLE120C16MP11	XAHC36D	1.03	0.95	0.95
TMLE120C20MP11	CF/CM30C	1.02	0.99	0.96
TMLE120C20MP11	CF/CM36C	1.03	1.00	0.95
TMLE120C20MP11	XAFC30C	1.03	1.04	0.95
TMLE120C20MP11	XAFC36D	1.03	1.02	0.95
TMLE120C20MP11	XAHC30C	1.03	1.03	0.95
TMLE120C20MP11	XAHC36D	1.03	1.01	0.95
TMLV060A12MP12C	CF/CM/CU30B	0.98	0.89	0.92
TMLV060A12MP12C	CF/CM/CU36B	0.99	0.90	0.93
TMLV060A12MP12C	XAF/XAUB30C	0.99	0.93	0.92
TMLV060A12MP12C	XAF/XAUB36D	1.00	0.92	0.92
TMLV060A12MP12C	XAHB30C	0.99	0.93	0.93
TMLV060A12MP12C	XAHB36D	1.00	0.92	0.94
TMLV100C16MP12C	CF/CM30C	1.00	0.89	0.94
TMLV100C16MP12C	CF/CM36C	1.01	0.91	0.95
TMLV100C16MP12C	XAFC30C	1.01	0.93	0.93
TMLV100C16MP12C	XAFC36D	1.01	0.92	0.93
TMLV100C16MP12C	XAHC30C	1.01	0.93	0.93
TMLV100C16MP12C	XAHC36D	1.01	0.92	0.93
TMLV120C20MP12C	CF/CM30C	1.02	0.99	0.96
TMLV120C20MP12C	CF/CM36C	1.03	1.00	0.97
TMLV120C20MP12C	XAFC30C	1.03	1.04	0.95
TMLV120C20MP12C	XAFC36D	1.03	1.02	0.97
TMLV120C20MP12C	XAHC30C	1.03	1.03	0.97
TMLV120C20MP12C	XAHC36D	1.03	1.02	0.97
TP9C060B12MP13C	CF/CM/CU30B	0.99	0.87	0.95
TP9C060B12MP13C	CF/CM/CU36B	0.99	0.88	0.95
TP9C060B12MP13C	CF/CM30C	0.97	0.85	0.91
TP9C060B12MP13C	CF/CM36C	0.97	0.86	0.91
TP9C060B12MP13C	XAF/XAUB30C	1.00	0.92	0.94

Table 28: Cool multiplier furnace - 2.5 ton

Furnace model	Indoor coil model	Total capacity	Sensitive capacity	kW
TP9C060B12MP13C	XAF/XAUB36D	1.01	0.91	0.95
TP9C060B12MP13C	XAFC30C	0.98	0.90	0.92
TP9C060B12MP13C	XAFC36D	0.99	0.89	0.93
TP9C060B12MP13C	XAHB30C	1.00	0.92	0.94
TP9C060B12MP13C	XAHB36D	1.00	0.91	0.94
TP9C060B12MP13C	XAHC30C	0.98	0.90	0.92
TP9C060B12MP13C	XAHC36D	0.99	0.89	0.93
TP9C080B12MP13C	CF/CM/CU30B	0.99	0.88	0.93
TP9C080B12MP13C	CF/CM/CU36B	0.99	0.89	0.93
TP9C080B12MP13C	CF/CM30C	0.97	0.86	0.91
TP9C080B12MP13C	CF/CM36C	0.98	0.87	0.92
TP9C080B12MP13C	XAF/XAUB30C	1.01	0.93	0.93
TP9C080B12MP13C	XAF/XAUB36D	1.01	0.92	0.93
TP9C080B12MP13C	XAFC30C	0.99	0.91	0.91
TP9C080B12MP13C	XAFC36D	0.99	0.90	0.92
TP9C080B12MP13C	XAHB30C	1.01	0.93	0.95
TP9C080B12MP13C	XAHB36D	1.01	0.92	0.95
TP9C080B12MP13C	XAHC30C	0.99	0.91	0.91
TP9C080B12MP13C	XAHC36D	0.99	0.90	0.92
TP9C080C16MP13C	CF/CM30C	1.01	0.93	0.95
TP9C080C16MP13C	CF/CM36C	1.01	0.94	0.95
TP9C080C16MP13C	XAFC30C	1.02	0.98	0.96
TP9C080C16MP13C	XAFC36D	1.03	0.97	0.97
TP9C080C16MP13C	XAHC30C	1.02	0.98	0.96
TP9C080C16MP13C	XAHC36D	1.03	0.97	0.97
TP9C100C16MP13C	CF/CM30C	1.01	0.92	0.95
TP9C100C16MP13C	CF/CM36C	1.01	0.92	0.95
TP9C100C16MP13C	XAFC30C	1.02	0.97	0.94
TP9C100C16MP13C	XAFC36D	1.03	0.95	0.95
TP9C100C16MP13C	XAHC30C	1.02	0.97	0.94
TP9C100C16MP13C	XAHC36D	1.02	0.94	0.94
TP9C100C20MP13C	CF/CM30C	1.02	1.00	0.98
TP9C100C20MP13C	CF/CM36C	1.03	1.01	0.97
TP9C100C20MP13C	XAFC30C	1.03	1.05	0.99
TP9C100C20MP13C	XAFC36D	1.03	1.04	0.99
TP9C100C20MP13C	XAHC30C	1.03	1.05	0.99
TP9C100C20MP13C	XAHC36D	1.03	1.03	0.99
TPLC060A12MP13C	CF/CM/CU30B	0.98	0.89	0.92
TPLC060A12MP13C	CF/CM/CU36B	0.99	0.90	0.93
TPLC060A12MP13C	XAF/XAUB30C	0.99	0.93	0.92
TPLC060A12MP13C	XAF/XAUB36D	1.00	0.92	0.92
TPLC060A12MP13C	XAHB30C	0.99	0.93	0.93
TPLC060A12MP13C	XAHB36D	1.00	0.92	0.94
TPLC080B12MP13C	CF/CM/CU30B	0.99	0.88	0.95
TPLC080B12MP13C	CF/CM/CU36B	0.99	0.89	0.95
TPLC080B12MP13C	CF/CM30C	0.97	0.86	0.93
TPLC080B12MP13C	CF/CM36C	0.97	0.87	0.93
TPLC080B12MP13C	XAF/XAUB30C	1.00	0.93	0.94
TPLC080B12MP13C	XAF/XAUB36D	1.01	0.92	0.95
TPLC080B12MP13C	XAFC30C	0.98	0.91	0.92
TPLC080B12MP13C	XAFC36D	0.99	0.90	0.93
TPLC080B12MP13C	XAHB30C	1.00	0.93	0.96
TPLC080B12MP13C	XAHB36D	1.01	0.92	0.99

Table 28: Cool multiplier furnace - 2.5 ton

Furnace model	Indoor coil model	Total capacity	Sensitive capacity	kW
TPLC080B12MP13C	XAHC30C	0.98	0.91	0.94
TPLC080B12MP13C	XAHC36D	0.99	0.90	0.93
TPLC080C16MP13C	CF/CM30C	1.00	0.89	0.94
TPLC080C16MP13C	CF/CM36C	1.01	0.91	0.95
TPLC080C16MP13C	XAFC30C	1.01	0.93	0.93
TPLC080C16MP13C	XAFC36D	1.01	0.92	0.93
TPLC080C16MP13C	XAHC30C	1.01	0.93	0.93
TPLC080C16MP13C	XAHC36D	1.01	0.92	0.93
TPLC100C16MP13C	CF/CM30C	1.00	0.89	0.94
TPLC100C16MP13C	CF/CM36C	1.01	0.91	0.95
TPLC100C16MP13C	XAFC30C	1.01	0.93	0.93
TPLC100C16MP13C	XAFC36D	1.01	0.92	0.93
TPLC100C16MP13C	XAHC30C	1.01	0.93	0.93
TPLC100C16MP13C	XAHC36D	1.01	0.92	0.93
TPLC100C20MP13C	CF/CM30C	1.02	0.99	0.96
TPLC100C20MP13C	CF/CM36C	1.03	1.00	0.97
TPLC100C20MP13C	XAFC30C	1.03	1.04	0.95
TPLC100C20MP13C	XAFC36D	1.03	1.02	0.97
TPLC100C20MP13C	XAHC30C	1.03	1.03	0.97
TPLC100C20MP13C	XAHC36D	1.03	1.02	0.97
TPLC120C20MP13C	CF/CM30C	1.02	0.99	0.96
TPLC120C20MP13C	CF/CM36C	1.03	1.00	0.97
TPLC120C20MP13C	XAFC30C	1.03	1.04	0.95
TPLC120C20MP13C	XAFC36D	1.03	1.02	0.97
TPLC120C20MP13C	XAHC30C	1.03	1.03	0.97
TPLC120C20MP13C	XAHC36D	1.03	1.02	0.97
CP9C060B12MP13C	CF/CM/CU30B	0.99	0.87	0.95
CP9C060B12MP13C	CF/CM/CU36B	0.99	0.88	0.95
CP9C060B12MP13C	CF/CM30C	0.97	0.85	0.91
CP9C060B12MP13C	CF/CM36C	0.97	0.86	0.91
CP9C060B12MP13C	XAF/XAUB30C	1.00	0.92	0.94
CP9C060B12MP13C	XAF/XAUB36D	1.01	0.91	0.95
CP9C060B12MP13C	XAFC30C	0.98	0.90	0.92
CP9C060B12MP13C	XAFC36D	0.99	0.89	0.93
CP9C060B12MP13C	XAHB30C	1.00	0.92	0.94
CP9C060B12MP13C	XAHB36D	1.00	0.91	0.94
CP9C060B12MP13C	XAHC30C	0.98	0.90	0.92
CP9C060B12MP13C	XAHC36D	0.99	0.89	0.93
CP9C080B12MP13C	CF/CM/CU30B	0.99	0.88	0.93
CP9C080B12MP13C	CF/CM/CU36B	0.99	0.89	0.93
CP9C080B12MP13C	CF/CM30C	0.97	0.86	0.91
CP9C080B12MP13C	CF/CM36C	0.98	0.87	0.92
CP9C080B12MP13C	XAF/XAUB30C	1.01	0.93	0.93
CP9C080B12MP13C	XAF/XAUB36D	1.01	0.92	0.93
CP9C080B12MP13C	XAFC30C	0.99	0.91	0.91
CP9C080B12MP13C	XAFC36D	0.99	0.90	0.92
CP9C080B12MP13C	XAHB30C	1.01	0.93	0.95
CP9C080B12MP13C	XAHB36D	1.01	0.92	0.95
CP9C080B12MP13C	XAHC30C	0.99	0.91	0.91
CP9C080B12MP13C	XAHC36D	0.99	0.90	0.92
CP9C080C16MP13C	CF/CM30C	1.01	0.93	0.95
CP9C080C16MP13C	CF/CM36C	1.01	0.94	0.95
CP9C080C16MP13C	XAFC30C	1.02	0.98	0.96

Table 28: Cool multiplier furnace - 2.5 ton

Furnace model	Indoor coil model	Total capacity	Sensitive capacity	kW
CP9C080C16MP13C	XAFC36D	1.03	0.97	0.97
CP9C080C16MP13C	XAHC30C	1.02	0.98	0.96
CP9C080C16MP13C	XAHC36D	1.03	0.97	0.97
CP9C100C16MP13C	CF/CM30C	1.01	0.92	0.95
CP9C100C16MP13C	CF/CM36C	1.01	0.92	0.95
CP9C100C16MP13C	XAFC30C	1.02	0.97	0.94
CP9C100C16MP13C	XAFC36D	1.03	0.95	0.95
CP9C100C16MP13C	XAHC30C	1.02	0.97	0.94
CP9C100C16MP13C	XAHC36D	1.02	0.94	0.94
CP9C100C20MP13C	CF/CM30C	1.02	1.00	0.98
CP9C100C20MP13C	CF/CM36C	1.03	1.01	0.97
CP9C100C20MP13C	XAFC30C	1.03	1.05	0.99
CP9C100C20MP13C	XAFC36D	1.03	1.04	0.99
CP9C100C20MP13C	XAHC30C	1.03	1.05	0.99
CP9C100C20MP13C	XAHC36D	1.03	1.03	0.99
CPLC060A12MP13C	CF/CM/CU30B	0.98	0.89	0.92
CPLC060A12MP13C	CF/CM/CU36B	0.99	0.90	0.93
CPLC060A12MP13C	XAF/XAUB30C	0.99	0.93	0.92
CPLC060A12MP13C	XAF/XAUB36D	1.00	0.92	0.92
CPLC060A12MP13C	XAHB30C	0.99	0.93	0.93
CPLC060A12MP13C	XAHB36D	1.00	0.92	0.94
CPLC080B12MP13C	CF/CM/CU30B	0.99	0.88	0.95
CPLC080B12MP13C	CF/CM/CU36B	0.99	0.89	0.95
CPLC080B12MP13C	CF/CM30C	0.97	0.86	0.93
CPLC080B12MP13C	CF/CM36C	0.97	0.87	0.93
CPLC080B12MP13C	XAF/XAUB30C	1.00	0.93	0.94
CPLC080B12MP13C	XAF/XAUB36D	1.01	0.92	0.95
CPLC080B12MP13C	XAFC30C	0.98	0.91	0.92
CPLC080B12MP13C	XAFC36D	0.99	0.90	0.93
CPLC080B12MP13C	XAHB30C	1.00	0.93	0.96
CPLC080B12MP13C	XAHB36D	1.01	0.92	0.99
CPLC080B12MP13C	XAHC30C	0.98	0.91	0.94
CPLC080B12MP13C	XAHC36D	0.99	0.90	0.93
CPLC080C16MP13C	CF/CM30C	1.00	0.89	0.94
CPLC080C16MP13C	CF/CM36C	1.01	0.91	0.95
CPLC080C16MP13C	XAFC30C	1.01	0.93	0.93
CPLC080C16MP13C	XAFC36D	1.01	0.92	0.93
CPLC080C16MP13C	XAHC30C	1.01	0.93	0.93
CPLC080C16MP13C	XAHC36D	1.01	0.92	0.93
CPLC100C16MP13C	CF/CM30C	1.00	0.89	0.94
CPLC100C16MP13C	CF/CM36C	1.01	0.91	0.95
CPLC100C16MP13C	XAFC30C	1.01	0.93	0.93
CPLC100C16MP13C	XAFC36D	1.01	0.92	0.93
CPLC100C16MP13C	XAHC30C	1.01	0.93	0.93
CPLC100C16MP13C	XAHC36D	1.01	0.92	0.93
CPLC100C20MP13C	CF/CM30C	1.02	0.99	0.96
CPLC100C20MP13C	CF/CM36C	1.03	1.00	0.97
CPLC100C20MP13C	XAFC30C	1.03	1.04	0.95
CPLC100C20MP13C	XAFC36D	1.03	1.02	0.97
CPLC100C20MP13C	XAHC30C	1.03	1.03	0.97
CPLC100C20MP13C	XAHC36D	1.03	1.02	0.97
CPLC120C20MP13C	CF/CM30C	1.02	0.99	0.96
CPLC120C20MP13C	CF/CM36C	1.03	1.00	0.97

Table 28: Cool multiplier furnace - 2.5 ton

Furnace model	Indoor coil model	Total capacity	Sensitive capacity	kW
CPLC120C20MP13C	XAFC30C	1.03	1.04	0.95
CPLC120C20MP13C	XAFC36D	1.03	1.02	0.97
CPLC120C20MP13C	XAHC30C	1.03	1.03	0.97
CPLC120C20MP13C	XAHC36D	1.03	1.02	0.97

Performance data - 3 ton

See the following tables for performance and multiplier data for the TCE2B36S21S unit.

Condenser only performance data - 3 ton

Table 29: TCE2B36S21S condenser table

Saturated suction at compressor		Outdoor ambient temperature															
Temperature	Pressure	55 °F		65 °F		75 °F		85 °F		95 °F		105 °F		115 °F		125 °F	
(°F)	(psig)	MBH	kW	MBH	kW	MBH	kW	MBH	kW	MBH	kW	MBH	kW	MBH	kW	MBH	kW
35	107	36.5	1.54	35.0	1.72	33.1	1.92	31.1	2.15	28.8	2.42	26.3	2.74	23.8	3.11	21.2	3.55
40	118	40.2	1.56	38.6	1.74	36.6	1.93	34.3	2.16	31.8	2.43	29.2	2.73	26.5	3.09	23.7	3.52
45	130	44.3	1.59	42.3	1.76	40.1	1.95	37.6	2.17	35.0	2.43	32.2	2.73	29.3	3.08	26.3	3.50
50	142	48.5	1.62	46.3	1.78	43.9	1.96	41.2	2.18	38.3	2.43	35.3	2.72	32.2	3.06	29.1	3.46
55	156	52.9	1.66	50.5	1.81	47.8	1.98	44.9	2.18	41.8	2.42	38.5	2.71	35.3	3.04	31.9	3.43

Condenser only performance data notes

- For outdoor unit (condenser) performance only. Data does not include the effects of air handler power or heat.
- Performance based on 15°F subcooling and 15°F superheat at the outdoor unit base valves:
  a. Increase capacity by 1% for each 2°F increase in subcooling.
  b. Decrease capacity by 1% for each 2°F decrease in subcooling.
- Maximum recommended condensing temperature is 140°F.

Cooling performance data - 3 ton

Table 30: Cooling performance data - TCE2B36S21S with indoor coil XAFB36DXXN1

Air temperature entering outdoor unit (°F)	ID CFM	950					1150					1350				
	ID DB (°F)	80	80	75	80	80	80	80	75	80	80	80	80	75	80	80
	ID WB (°F)	57	62	62	67	72	57	62	62	67	72	57	62	62	67	72
55	T.C.	33.4	36.7	36.6	40.4	44.7	35.4	37.8	37.8	41.9	45.8	37.0	38.6	38.5	42.3	46.6
	S.C.	33.4	30.7	26.1	26.0	21.9	35.4	33.6	28.2	28.6	23.3	37.0	36.0	30.0	30.8	24.5
	kW	1.79	1.79	1.79	1.80	1.83	1.89	1.88	1.88	1.90	1.93	1.99	1.98	1.98	2.00	2.02
65	T.C.	33.5	36.3	36.2	39.7	43.4	35.7	37.4	37.4	40.9	44.5	37.3	38.1	38.1	41.7	45.2
	S.C.	33.5	30.7	26.0	25.9	21.0	35.7	33.5	28.2	28.0	22.3	37.3	36.0	30.0	29.8	23.3
	kW	1.98	1.99	1.99	2.00	2.02	2.07	2.08	2.08	2.09	2.11	2.17	2.17	2.17	2.19	2.21
75	T.C.	32.5	35.1	35.0	38.4	41.9	34.5	36.1	36.0	39.5	43.0	36.0	36.7	36.8	40.2	43.7
	S.C.	32.5	29.8	25.2	25.2	20.3	34.5	32.6	27.2	27.1	21.5	36.0	34.9	29.0	28.9	22.5
	kW	2.24	2.25	2.25	2.26	2.27	2.34	2.34	2.34	2.35	2.36	2.43	2.43	2.43	2.44	2.45
85	T.C.	31.1	33.3	33.3	36.6	40.0	32.9	34.3	34.3	37.6	41.0	34.3	34.7	34.9	38.2	41.6
	S.C.	31.1	28.6	24.2	24.2	19.4	32.9	31.3	26.1	26.0	20.5	34.3	33.5	27.8	27.7	21.5
	kW	2.54	2.54	2.55	2.55	2.55	2.63	2.63	2.63	2.64	2.64	2.72	2.72	2.72	2.73	2.73
95	T.C.	29.9	31.8	31.7	34.9	38.3	31.6	32.6	32.6	35.9	39.1	32.8	32.9	33.2	36.4	39.7
	S.C.	29.9	27.8	23.3	23.3	18.7	31.6	30.4	25.2	25.2	19.8	32.8	32.5	26.9	26.8	20.7
	kW	2.85	2.85	2.85	2.85	2.84	2.94	2.94	2.94	2.93	2.92	3.02	3.02	3.02	3.02	3.01
105	T.C.	28.8	30.2	30.1	33.2	36.3	30.4	30.6	30.9	33.9	37.1	31.6	31.7	31.3	34.4	37.5
	S.C.	28.8	27.6	23.0	23.0	18.2	30.4	30.1	25.0	24.9	19.3	31.6	31.7	26.8	26.7	20.4
	kW	3.18	3.17	3.18	3.17	3.15	3.26	3.26	3.26	3.25	3.23	3.35	3.34	3.34	3.33	3.31
115	T.C.	27.4	28.0	28.1	30.9	33.9	28.9	28.9	28.6	31.6	34.6	30.0	30.0	29.0	32.0	34.9
	S.C.	27.4	26.7	22.4	22.2	17.4	28.9	28.9	24.3	24.3	18.6	30.0	30.0	26.3	26.3	19.7
	kW	3.61	3.60	3.58	3.55	3.53	3.66	3.66	3.65	3.63	3.61	3.73	3.73	3.73	3.71	3.69

Table 30: Cooling performance data - TCE2B36S21S with indoor coil XAFB36DXXN1

Air temperature entering outdoor unit (°F)	ID CFM	950					1150					1350				
	ID DB (°F)	80	80	75	80	80	80	80	75	80	80	80	80	75	80	80
	ID WB (°F)	57	62	62	67	72	57	62	62	67	72	57	62	62	67	72
125	T.C.	24.9	25.2	25.4	28.3	31.3	26.4	26.8	26.0	28.9	32.0	27.5	27.9	26.3	29.2	32.4
	S.C.	24.9	25.2	20.9	20.9	16.2	26.4	26.8	23.3	23.5	18.1	27.5	27.9	25.4	25.9	19.7
	kW	4.04	4.07	4.03	4.06	4.04	4.13	4.16	4.16	4.14	4.13	4.22	4.24	4.28	4.24	4.20

Cooling performance data notes

- All capacities include indoor fan heat. kW values are for the system (outdoor + indoor).
- Green shaded cells are ACCA (TVA) conditions.
- Blue shaded cells are AHRI conditions.

Multipliers for determining the performance with other indoor sections

Note: For dry bulb temperatures different than those listed (between 73°F to 87°F), sensible capacity increases by 1060 BTUH per 1000 CFM per degree above the listed temperature and decreases by 1060 BTUH per 1000 CFM per degree below the listed temperature.

Cool multiplier airhandler - 3 ton

Table 31: Cool multiplier air handler - 3 ton

Air handler model	Indoor coil model	Total capacity	Sensible capacity	kW
—	CF/CM42C	1.00	1	1
—	CF42B	1.00	1	1
—	XAF/XAUC42E	1.00	1.01	1
—	XAFB36E	1.00	0.99	1
—	XAFC36D	1.00	1.01	1
—	XAFD42E	1.00	1.01	1
—	XAHC36D	1.00	1.01	1
—	XAHC42E	1.00	1.01	1
—	XAHD42E	1.00	1.01	1
JHETB36DXXS2N1	—	1.02	1.03	0.96
JHETC36DXXS2N1	—	1.02	1.02	0.94
JHVTB36DXXC2N1	—	1.00	0.95	0.94
JHVTC36DXXC2N1	—	1.02	1	0.94
JMET12BS2N1A	XAF/XAUB36D	1.02	1.02	0.96
JMET12BS2N1A	XAFB36E	1.02	1.02	0.96
JMET12CS2N1A	XAF/XAUC42E	1.02	1.01	0.94
JMET12CS2N1A	XAFC36D	1.02	0.99	0.94
JMET12CS2N1A	XAHC36D	1.02	0.99	0.94
JMET12CS2N1A	XAHC42E	1.01	0.99	0.93
JMET16CS2N1A	XAF/XAUC42E	1.02	1.02	0.94
JMET16CS2N1A	XAFC36D	1.02	1	0.94
JMET16CS2N1A	XAHC36D	1.02	1	0.94
JMET16CS2N1A	XAHC42E	1.02	1.01	0.94
JMET18DS2N1A	XAFD42E	1.01	0.95	0.93
JMET18DS2N1A	XAHD42E	1.01	0.95	0.93
JMVT12BC2N1A	XAF/XAUB36D	1.01	0.97	0.93
JMVT12BC2N1A	XAFB36E	1.01	0.97	0.93

Table 31: Cool multiplier air handler - 3 ton

Air handler model	Indoor coil model	Total capacity	Sensible capacity	kW
JMVT12BC2N1A	XAHB36D	1.01	0.97	0.95
JMVT17CC2N1A	XAF/XAUC42E	1.01	0.96	0.93
JMVT17CC2N1A	XAFC36D	1.01	0.96	0.93
JMVT17CC2N1A	XAHC36D	1.01	0.95	0.93
JMVT17CC2N1A	XAHC42E	1.01	0.98	0.93
JMVT20DC2N1A	XAFD42E	1.01	0.97	0.93
JMVT20DC2N1A	XAHD42E	1.01	0.97	0.93
ME12BN21	CF42B	1.02	0.99	0.94
ME12CN21	CF/CM42C	0.99	0.94	0.93
ME16CN21	CF/CM42C	1.02	1.01	0.94
MVC12BN21	CF42B	0.99	0.95	0.92
MVC12CN21	CF/CM42C	1.01	0.98	0.95
MVC16CN21	CF/CM42C	1.01	0.98	0.95

Cool multiplier furnace - 3 ton

Table 32: Cool multiplier furnace - 3 ton

Furnace model	Indoor coil model	Total capacity	Sensible capacity	kW
TL8E060A12UH11	CF42B	0.99	0.98	0.99
TL8E060A12UH11	XAF/XAUB36D	1.00	0.98	1
TL8E060A12UH11	XAFB36E	1.00	0.98	0.98
TL8E060A12UH11	XAHB36D	0.99	0.97	0.99
TL8E080C16UH11	CF/CM42C	1.01	0.99	0.95
TL8E080C16UH11	XAF/XAUC42E	1.01	0.99	0.95
TL8E080C16UH11	XAFC36D	1.01	0.98	0.95
TL8E080C16UH11	XAFD42E	1.01	0.99	0.95
TL8E080C16UH11	XAHC36D	1.01	0.98	0.96
TL8E080C16UH11	XAHC42E	1.01	0.98	0.95
TL8E080C16UH11	XAHD42E	1.01	0.98	0.95
TL8E100C20UH11	CF/CM42C	1.01	0.98	0.95
TL8E100C20UH11	XAF/XAUC42E	1.01	0.97	0.93
TL8E100C20UH11	XAFC36D	1.01	0.97	0.95
TL8E100C20UH11	XAFD42E	1.01	0.97	0.93
TL8E100C20UH11	XAHC36D	1.02	1.04	0.96
TL8E100C20UH11	XAHC42E	1.00	0.95	0.94
TL8E100C20UH11	XAHD42E	1.01	0.97	0.93
TL9E060B12UH11	CF/CM42C	1.00	0.99	1
TL9E060B12UH11	CF42B	0.99	0.98	0.99
TL9E060B12UH11	XAF/XAUC42E	1.00	0.99	1
TL9E060B12UH11	XAFC36D	1.00	0.99	1
TL9E080C16UH11	CF/CM42C	1.01	1	0.95
TL9E080C16UH11	XAF/XAUC42E	1.01	1	0.95
TL9E080C16UH11	XAFC36D	1.01	1	0.97
TL9E080C16UH11	XAFD42E	1.01	1	0.95
TL9E080C16UH11	XAHC36D	1.01	0.99	0.96
TL9E080C16UH11	XAHC42E	1.01	0.99	0.96
TL9E080C16UH11	XAHD42E	1.01	1	0.95
TL9E100C20UH11	CF/CM42C	1.01	0.96	0.95
TL9E100C20UH11	XAF/XAUC42E	1.00	0.95	0.94
TL9E100C20UH11	XAFC36D	1.00	0.95	0.94
TL9E100C20UH11	XAFD42E	1.00	0.95	0.94
TL9E100C20UH11	XAHC36D	1.01	1.03	0.97
TL9E100C20UH11	XAHC42E	1.02	1.03	0.98

Table 32: Cool multiplier furnace - 3 ton

Furnace model	Indoor coil model	Total capacity	Sensible capacity	kW
TL9E100C20UH11	XAHD42E	1.00	0.95	0.94
TM8E040A12MP11	CF42B	1.00	0.97	0.96
TM8E040A12MP11	XAF/XAUB36D	1.00	0.98	0.96
TM8E040A12MP11	XAFB36E	1.00	0.98	0.96
TM8E040A12MP11	XAHB36D	1.00	0.97	0.98
TM8E060A12MP11	CF42B	1.00	0.98	1
TM8E060A12MP11	XAF/XAUB36D	1.00	0.98	1
TM8E060A12MP11	XAFB36E	1.00	0.99	0.98
TM8E060A12MP11	XAHB36D	1.00	0.98	1
TM8E080B12MP11	CF/CM42C	1.01	1	0.96
TM8E080B12MP11	CF42B	1.00	0.98	1
TM8E080B12MP11	XAF/XAUB36D	1.00	0.98	1
TM8E080B12MP11	XAF/XAUC42E	1.00	0.99	0.98
TM8E080B12MP11	XAFB36E	1.00	0.99	0.98
TM8E080B12MP11	XAFC36D	1.00	0.98	1
TM8E080B12MP11	XAHB36D	1.00	0.98	1
TM8E080B12MP11	XAHC36D	1.00	0.98	1
TM8E080B12MP11	XAHC42E	1.00	0.99	0.98
TM8E080C16MP11	CF/CM42C	1.01	0.99	0.95
TM8E080C16MP11	XAF/XAUC42E	1.01	0.98	0.95
TM8E080C16MP11	XAFC36D	1.01	0.98	0.95
TM8E080C16MP11	XAFD42E	1.01	0.98	0.95
TM8E080C16MP11	XAHC36D	1.01	0.98	0.95
TM8E080C16MP11	XAHC42E	1.01	0.98	0.95
TM8E080C16MP11	XAHD42E	1.01	0.98	0.95
TM8E080C20MP11	CF/CM42C	1.01	0.97	0.95
TM8E080C20MP11	XAF/XAUC42E	1.01	0.96	0.95
TM8E080C20MP11	XAFC36D	1.01	0.96	0.93
TM8E080C20MP11	XAFD42E	1.01	0.96	0.95
TM8E080C20MP11	XAHC36D	1.00	0.95	0.94
TM8E080C20MP11	XAHC42E	1.00	0.95	0.94
TM8E080C20MP11	XAHD42E	1.01	0.96	0.95
TM8E100B12MP11	CF/CM42C	1.01	1	0.97
TM8E100B12MP11	CF42B	1.00	0.98	0.98
TM8E100B12MP11	XAF/XAUB36D	1.01	0.99	0.96
TM8E100B12MP11	XAF/XAUC42E	1.00	0.98	0.96
TM8E100B12MP11	XAFB36E	1.00	0.99	0.96
TM8E100B12MP11	XAFC36D	1.01	0.99	0.96
TM8E100B12MP11	XAHB36D	1.00	0.98	1
TM8E100B12MP11	XAHC36D	1.01	0.99	0.96
TM8E100B12MP11	XAHC42E	1.00	0.98	0.96
TM8E100C16MP11	CF/CM42C	1.02	1.01	0.96
TM8E100C16MP11	XAF/XAUC42E	1.01	1	0.95
TM8E100C16MP11	XAFC36D	1.01	1	0.95
TM8E100C16MP11	XAFD42E	1.01	1	0.95
TM8E100C16MP11	XAHC36D	1.01	0.99	0.95
TM8E100C16MP11	XAHC42E	1.01	0.99	0.95
TM8E100C16MP11	XAHD42E	1.01	0.99	0.95
TM8E100C20MP11	CF/CM42C	1.01	0.98	0.95
TM8E100C20MP11	XAF/XAUC42E	1.00	0.95	0.94
TM8E100C20MP11	XAFC36D	1.02	1.05	0.98
TM8E100C20MP11	XAFD42E	1.01	0.97	0.95
TM8E100C20MP11	XAHC36D	1.02	1.05	0.98

Table 32: Cool multiplier furnace - 3 ton

Furnace model	Indoor coil model	Total capacity	Sensible capacity	kW
TM8E100C20MP11	XAHC42E	1.00	0.95	0.94
TM8E100C20MP11	XAHD42E	1.00	0.95	0.94
TM8E120C16MP11	CF/CM42C	1.02	1.02	0.96
TM8E120C16MP11	XAF/XAUC42E	1.01	1	0.95
TM8E120C16MP11	XAFC36D	1.01	1	0.95
TM8E120C16MP11	XAFD42E	1.01	1	0.95
TM8E120C16MP11	XAHC36D	1.01	0.99	0.95
TM8E120C16MP11	XAHC42E	1.01	0.99	0.95
TM8E120C16MP11	XAHD42E	1.01	1	0.95
TM8E120C20MP11	CF/CM42C	1.02	0.99	0.96
TM8E120C20MP11	XAF/XAUC42E	1.01	0.98	0.95
TM8E120C20MP11	XAFC36D	1.01	0.98	0.95
TM8E120C20MP11	XAFD42E	1.01	0.98	0.95
TM8E120C20MP11	XAHC36D	1.01	0.97	0.95
TM8E120C20MP11	XAHC42E	1.00	0.96	0.94
TM8E120C20MP11	XAHD42E	1.01	0.98	0.95
TM8E130D20MP11	XAFD42E	1.01	0.98	0.95
TM8E130D20MP11	XAHD42E	1.00	0.96	0.94
TM8V060A12MP12C	CF42B	0.99	0.96	0.95
TM8V060A12MP12C	XAF/XAUB36D	1.00	0.97	0.96
TM8V060A12MP12C	XAFB36E	0.99	0.97	0.95
TM8V060A12MP12C	XAHB36D	0.99	0.97	0.99
TM8V080B12MP12C	CF/CM42C	0.99	0.95	0.99
TM8V080B12MP12C	CF42B	0.99	0.95	0.99
TM8V080B12MP12C	XAF/XAUB36D	0.99	0.95	0.99
TM8V080B12MP12C	XAF/XAUC42E	0.99	0.95	0.97
TM8V080B12MP12C	XAFC36D	0.99	0.95	0.99
TM8V080B12MP12C	XAHC36D	0.99	0.96	0.99
TM8V080B12MP12C	XAHC42E	0.99	0.95	0.99
TM8V080C16MP12C	CF/CM42C	1.00	0.95	0.94
TM8V080C16MP12C	XAF/XAUC42E	1.00	0.97	0.94
TM8V080C16MP12C	XAFC36D	1.01	0.97	0.95
TM8V080C16MP12C	XAFD42E	1.00	0.97	0.94
TM8V080C16MP12C	XAHC36D	1.01	0.97	0.95
TM8V080C16MP12C	XAHC42E	1.00	0.97	0.94
TM8V080C16MP12C	XAHD42E	1.00	0.97	0.94
TM8V100C16MP12C	CF/CM42C	1.00	0.95	0.94
TM8V100C16MP12C	XAF/XAUC42E	1.00	0.97	0.94
TM8V100C16MP12C	XAFC36D	1.01	0.97	0.95
TM8V100C16MP12C	XAFD42E	1.00	0.97	0.94
TM8V100C16MP12C	XAHC36D	1.01	0.97	0.95
TM8V100C16MP12C	XAHC42E	1.00	0.97	0.94
TM8V100C16MP12C	XAHD42E	1.00	0.97	0.94
TM8V100C20MP12C	CF/CM42C	1.01	0.98	0.95
TM8V100C20MP12C	XAF/XAUC42E	1.01	0.98	0.95
TM8V100C20MP12C	XAFC36D	1.01	0.98	0.95
TM8V100C20MP12C	XAFD42E	1.01	0.98	0.95
TM8V100C20MP12C	XAHC36D	1.01	0.98	0.95
TM8V100C20MP12C	XAHC42E	1.01	0.98	0.95
TM8V100C20MP12C	XAHD42E	1.01	0.98	0.95
TM8V120C20MP12C	CF/CM42C	1.01	0.98	0.95
TM8V120C20MP12C	XAF/XAUC42E	1.01	0.98	0.95
TM8V120C20MP12C	XAFC36D	1.01	0.98	0.95

Table 32: Cool multiplier furnace - 3 ton

Furnace model	Indoor coil model	Total capacity	Sensible capacity	kW
TM8V120C20MP12C	XAFD42E	1.01	0.98	0.95
TM8V120C20MP12C	XAHC36D	1.01	0.98	0.95
TM8V120C20MP12C	XAHC42E	1.01	0.98	0.95
TM8V120C20MP12C	XAHD42E	1.01	0.98	0.95
TM8Y060A12MP11	CF42B	0.99	0.95	0.95
TM8Y080B12MP11	CF/CM42C	1.00	0.97	0.96
TM8Y080B12MP11	CF42B	0.99	0.95	0.95
TM8Y080B12MP11	XAF/XAUB36D	0.99	0.95	0.95
TM8Y080B12MP11	XAF/XAUC42E	1.00	0.97	0.96
TM8Y080B12MP11	XAFB36E	1.00	0.96	0.96
TM8Y080B12MP11	XAFC36D	1.00	0.97	0.96
TM8Y080B12MP11	XAHB36D	0.99	0.95	0.97
TM8Y080B12MP11	XAHC36D	0.99	0.95	0.95
TM8Y080B12MP11	XAHC42E	1.00	0.96	0.96
TM8Y080C16MP11	XAF/XAUC42E	1.02	1.03	0.96
TM8Y080C16MP11	XAFC36D	1.01	1.02	0.97
TM8Y080C16MP11	XAFD42E	1.02	1.05	0.96
TM8Y080C16MP11	XAHC36D	1.01	1.02	0.97
TM8Y080C16MP11	XAHC42E	1.01	1.02	0.97
TM8Y080C16MP11	XAHD42E	1.02	1.03	0.96
TM8Y100C16MP11	XAF/XAUC42E	1.02	1.03	0.96
TM8Y100C16MP11	XAFC36D	1.01	1.02	0.97
TM8Y100C16MP11	XAFD42E	1.02	1.05	0.96
TM8Y100C16MP11	XAHC36D	1.01	1.02	0.97
TM8Y100C16MP11	XAHC42E	1.01	1.02	0.97
TM8Y100C16MP11	XAHD42E	1.02	1.03	0.96
TM8Y100C20MP11	CF/CM42C	1.01	0.96	0.95
TM8Y100C20MP11	XAF/XAUC42E	1.00	0.95	0.94
TM8Y100C20MP11	XAFC36D	1.00	0.95	0.94
TM8Y100C20MP11	XAFD42E	1.00	0.95	0.92
TM8Y100C20MP11	XAHC36D	1.01	1.01	0.95
TM8Y100C20MP11	XAHC42E	1.01	1.01	0.95
TM8Y100C20MP11	XAHD42E	1.02	1.03	0.96
TM8Y120C20MP11	CF/CM42C	1.01	0.96	0.95
TM8Y120C20MP11	XAF/XAUC42E	1.00	0.95	0.94
TM8Y120C20MP11	XAFC36D	1.00	0.95	0.94
TM8Y120C20MP11	XAFD42E	1.00	0.95	0.92
TM8Y120C20MP11	XAHC36D	1.01	1.01	0.95
TM8Y120C20MP11	XAHC42E	1.01	1.01	0.95
TM8Y120C20MP11	XAHD42E	1.02	1.03	0.96
TM9E060A10MP12	CF42B	0.99	0.95	0.99
TM9E060A10MP12	XAFB36E	0.99	0.96	0.99
TM9E060B12MP12	CF/CM42C	1.00	0.99	1
TM9E060B12MP12	CF42B	1.00	0.99	1
TM9E060B12MP12	XAF/XAUB36D	1.00	1	1
TM9E060B12MP12	XAF/XAUC42E	1.00	1	1
TM9E060B12MP12	XAFB36E	1.00	0.99	1
TM9E060B12MP12	XAFC36D	1.00	1	1
TM9E060B12MP12	XAHB36D	1.00	0.98	1
TM9E060B12MP12	XAHC36D	1.00	1	1
TM9E060B12MP12	XAHC42E	1.00	1	0.98
TM9E080B12MP12	CF/CM42C	1.01	1	0.96
TM9E080B12MP12	CF42B	1.00	0.98	1

Table 32: Cool multiplier furnace - 3 ton

Furnace model	Indoor coil model	Total capacity	Sensible capacity	kW
TM9E080B12MP12	XAF/XAUB36D	1.00	0.99	1
TM9E080B12MP12	XAF/XAUC42E	1.00	1	0.98
TM9E080B12MP12	XAFB36E	1.00	0.99	0.98
TM9E080B12MP12	XAFC36D	1.00	0.99	1
TM9E080B12MP12	XAHB36D	1.00	0.98	1
TM9E080B12MP12	XAHC36D	1.00	0.99	1
TM9E080B12MP12	XAHC42E	1.00	0.99	0.98
TM9E080C16MP12	CF/CM42C	1.01	1	0.95
TM9E080C16MP12	XAF/XAUC42E	1.01	0.99	0.96
TM9E080C16MP12	XAFC36D	1.01	0.99	0.96
TM9E080C16MP12	XAFD42E	1.01	1	0.95
TM9E080C16MP12	XAHC36D	1.01	0.99	0.96
TM9E080C16MP12	XAHC42E	1.01	0.99	0.96
TM9E080C16MP12	XAHD42E	1.01	0.99	0.96
TM9E080C20MP12	CF/CM42C	1.01	0.96	0.95
TM9E080C20MP12	XAF/XAUC42E	1.00	0.95	0.94
TM9E080C20MP12	XAFC36D	1.02	1.05	0.96
TM9E080C20MP12	XAFD42E	1.00	0.95	0.94
TM9E080C20MP12	XAHC36D	1.00	0.95	0.94
TM9E080C20MP12	XAHC42E	1.00	0.95	0.94
TM9E080C20MP12	XAHD42E	1.00	0.95	0.94
TM9E100C16MP12	CF/CM42C	1.01	1	0.95
TM9E100C16MP12	XAF/XAUC42E	1.01	1	0.95
TM9E100C16MP12	XAFC36D	1.01	0.99	0.97
TM9E100C16MP12	XAFD42E	1.01	1	0.95
TM9E100C16MP12	XAHC36D	1.01	0.99	0.96
TM9E100C16MP12	XAHC42E	1.01	0.99	0.96
TM9E100C16MP12	XAHD42E	1.01	0.99	0.96
TM9E100C20MP12	CF/CM42C	1.00	0.95	0.94
TM9E100C20MP12	XAF/XAUC42E	1.00	0.95	0.94
TM9E100C20MP12	XAFC36D	1.00	0.95	0.94
TM9E100C20MP12	XAFD42E	1.00	0.95	0.94
TM9E100C20MP12	XAHC36D	1.01	1.02	0.97
TM9E100C20MP12	XAHC42E	1.02	1.04	0.96
TM9E100C20MP12	XAHD42E	1.02	1.04	0.96
TM9E120D20MP12	XAFD42E	1.00	0.95	0.94
TM9E120D20MP12	XAHD42E	1.00	0.95	0.94
TM9V060B12MP12C	CF/CM42C	0.99	0.95	0.99
TM9V060B12MP12C	CF42B	0.99	0.95	0.99
TM9V060B12MP12C	XAF/XAUC42E	0.99	0.96	0.97
TM9V060B12MP12C	XAFB36E	0.99	0.96	0.99
TM9V060B12MP12C	XAHC42E	0.99	0.96	0.99
TM9V080B12MP12C	CF/CM42C	0.99	0.94	0.93
TM9V080B12MP12C	CF42B	0.99	0.94	0.95
TM9V080B12MP12C	XAF/XAUB36D	0.99	0.95	0.95
TM9V080B12MP12C	XAF/XAUC42E	0.99	0.95	0.95
TM9V080B12MP12C	XAFB36E	0.99	0.95	0.95
TM9V080B12MP12C	XAFC36D	0.99	0.95	0.95
TM9V080B12MP12C	XAHB36D	0.99	0.98	0.99
TM9V080B12MP12C	XAHC36D	0.99	0.95	0.95
TM9V080B12MP12C	XAHC42E	0.99	0.95	0.95
TM9V080C16MP12C	CF/CM42C	0.99	0.95	0.93
TM9V080C16MP12C	XAF/XAUC42E	1.00	0.96	0.96

Table 32: Cool multiplier furnace - 3 ton

Furnace model	Indoor coil model	Total capacity	Sensible capacity	kW
TM9V080C16MP12C	XAFC36D	1.01	0.99	0.96
TM9V080C16MP12C	XAFD42E	1.00	0.96	0.96
TM9V080C16MP12C	XAHC36D	1.00	0.99	1
TM9V080C16MP12C	XAHC42E	1.00	0.96	0.96
TM9V080C16MP12C	XAHD42E	1.00	0.96	0.96
TM9V100C16MP12C	CF/CM42C	0.99	0.94	0.93
TM9V100C16MP12C	XAF/XAUC42E	1.00	0.95	0.94
TM9V100C16MP12C	XAFC36D	1.00	0.95	0.94
TM9V100C16MP12C	XAFD42E	1.00	0.95	0.94
TM9V100C16MP12C	XAHC36D	0.99	0.95	0.93
TM9V100C16MP12C	XAHC42E	1.00	0.95	0.94
TM9V100C16MP12C	XAHD42E	1.00	0.95	0.94
TM9V100C20MP12C	CF/CM42C	1.01	0.99	0.95
TM9V100C20MP12C	XAF/XAUC42E	1.01	1	0.96
TM9V100C20MP12C	XAFC36D	1.01	1	0.97
TM9V100C20MP12C	XAFD42E	1.01	1	0.95
TM9V100C20MP12C	XAHC36D	1.01	1	0.97
TM9V100C20MP12C	XAHC42E	1.01	1	0.96
TM9V100C20MP12C	XAHD42E	1.01	1	0.96
TM9V120D20MP12C	XAFD42E	1.01	0.97	0.95
TM9V120D20MP12C	XAHD42E	1.00	0.96	0.94
TM9Y060B12MP11	CF/CM42C	0.99	0.95	0.99
TM9Y060B12MP11	CF42B	0.99	0.95	0.99
TM9Y060B12MP11	XAF/XAUB36D	0.99	0.95	0.99
TM9Y060B12MP11	XAF/XAUC42E	1.00	0.96	0.98
TM9Y060B12MP11	XAFB36E	1.00	0.98	0.98
TM9Y060B12MP11	XAFC36D	0.99	0.95	0.99
TM9Y060B12MP11	XAHC36D	0.99	0.95	0.99
TM9Y060B12MP11	XAHC42E	1.00	0.98	1
TM9Y080B12MP11	CF/CM42C	1.00	0.97	0.96
TM9Y080B12MP11	CF42B	0.99	0.96	0.97
TM9Y080B12MP11	XAF/XAUB36D	0.99	0.96	0.99
TM9Y080B12MP11	XAF/XAUC42E	1.00	0.97	0.96
TM9Y080B12MP11	XAFB36E	0.99	0.96	0.97
TM9Y080B12MP11	XAFC36D	1.00	0.97	0.96
TM9Y080B12MP11	XAHB36D	0.99	0.95	0.99
TM9Y080B12MP11	XAHC36D	0.99	0.96	0.99
TM9Y080B12MP11	XAHC42E	0.99	0.96	0.97
TM9Y080C16MP11	CF/CM42C	0.99	0.94	0.93
TM9Y080C16MP11	XAF/XAUC42E	1.01	0.99	0.96
TM9Y080C16MP11	XAFC36D	1.01	0.99	0.96
TM9Y080C16MP11	XAFD42E	1.01	0.99	0.96
TM9Y080C16MP11	XAHC36D	1.00	0.98	0.96
TM9Y080C16MP11	XAHC42E	1.00	0.98	0.96
TM9Y080C16MP11	XAHD42E	1.01	0.99	0.96
TM9Y100C16MP11	CF/CM42C	0.99	0.94	0.93
TM9Y100C16MP11	XAF/XAUC42E	1.01	0.99	0.96
TM9Y100C16MP11	XAFC36D	1.00	0.98	0.96
TM9Y100C16MP11	XAFD42E	1.01	0.99	0.95
TM9Y100C16MP11	XAHC36D	1.00	0.98	0.96
TM9Y100C16MP11	XAHC42E	1.00	0.98	0.96
TM9Y100C16MP11	XAHD42E	1.00	0.98	0.96
TM9Y100C20MP11	CF/CM42C	0.99	0.94	0.93

Table 32: Cool multiplier furnace - 3 ton

Furnace model	Indoor coil model	Total capacity	Sensible capacity	kW
TM9Y100C20MP11	XAF/XAUC42E	1.01	1.02	0.97
TM9Y100C20MP11	XAFC36D	1.01	1.02	0.97
TM9Y100C20MP11	XAFD42E	1.01	1.02	0.97
TM9Y100C20MP11	XAHC36D	1.01	1	0.96
TM9Y100C20MP11	XAHC42E	1.01	1	0.96
TM9Y100C20MP11	XAHD42E	1.01	1.02	0.97
TM9Y120D20MP11	XAFD42E	0.99	0.95	0.93
TM9Y120D20MP11	XAHD42E	1.02	1.03	0.96
TMLE040A12MP11	CF42B	1.00	0.97	0.96
TMLE040A12MP11	XAF/XAUB36D	1.00	0.98	0.96
TMLE040A12MP11	XAFB36E	1.00	0.98	0.96
TMLE040A12MP11	XAHB36D	1.00	0.97	0.98
TMLE060A12MP11	CF42B	1.00	0.98	1
TMLE060A12MP11	XAF/XAUB36D	1.00	0.98	1
TMLE060A12MP11	XAFB36E	1.00	0.99	0.98
TMLE060A12MP11	XAHB36D	1.00	0.98	1
TMLE080B12MP11	CF/CM42C	1.01	1	0.96
TMLE080B12MP11	CF42B	1.00	0.98	1
TMLE080B12MP11	XAF/XAUB36D	1.00	0.98	1
TMLE080B12MP11	XAF/XAUC42E	1.00	0.99	0.98
TMLE080B12MP11	XAFB36E	1.00	0.99	0.98
TMLE080B12MP11	XAFC36D	1.00	0.98	1
TMLE080B12MP11	XAHB36D	1.00	0.98	1
TMLE080B12MP11	XAHC36D	1.00	0.98	1
TMLE080B12MP11	XAHC42E	1.00	0.99	0.98
TMLE080C16MP11	CF/CM42C	1.01	0.99	0.95
TMLE080C16MP11	XAF/XAUC42E	1.01	0.98	0.95
TMLE080C16MP11	XAFC36D	1.01	0.98	0.95
TMLE080C16MP11	XAFD42E	1.01	0.98	0.95
TMLE080C16MP11	XAHC36D	1.01	0.98	0.95
TMLE080C16MP11	XAHC42E	1.01	0.98	0.95
TMLE080C16MP11	XAHD42E	1.01	0.98	0.95
TMLE080C20MP11	CF/CM42C	1.01	0.97	0.95
TMLE080C20MP11	XAF/XAUC42E	1.01	0.96	0.95
TMLE080C20MP11	XAFC36D	1.01	0.96	0.93
TMLE080C20MP11	XAFD42E	1.01	0.96	0.95
TMLE080C20MP11	XAHC36D	1.00	0.95	0.94
TMLE080C20MP11	XAHC42E	1.00	0.95	0.94
TMLE080C20MP11	XAHD42E	1.01	0.96	0.95
TMLE100B12MP11	CF/CM42C	1.01	1	0.97
TMLE100B12MP11	CF42B	1.00	0.98	0.98
TMLE100B12MP11	XAF/XAUB36D	1.01	0.99	0.96
TMLE100B12MP11	XAF/XAUC42E	1.00	0.98	0.96
TMLE100B12MP11	XAFB36E	1.00	0.99	0.96
TMLE100B12MP11	XAFC36D	1.01	0.99	0.96
TMLE100B12MP11	XAHB36D	1.00	0.98	1
TMLE100B12MP11	XAHC36D	1.01	0.99	0.96
TMLE100B12MP11	XAHC42E	1.00	0.98	0.96
TMLE100C16MP11	CF/CM42C	1.02	1.01	0.96
TMLE100C16MP11	XAF/XAUC42E	1.01	1	0.95
TMLE100C16MP11	XAFC36D	1.01	1	0.95
TMLE100C16MP11	XAFD42E	1.01	1	0.95
TMLE100C16MP11	XAHC36D	1.01	0.99	0.95

Table 32: Cool multiplier furnace - 3 ton

Furnace model	Indoor coil model	Total capacity	Sensible capacity	kW
TMLE100C16MP11	XAHC42E	1.01	0.99	0.95
TMLE100C16MP11	XAHD42E	1.01	0.99	0.95
TMLE100C20MP11	CF/CM42C	1.01	0.98	0.95
TMLE100C20MP11	XAF/XAUC42E	1.00	0.95	0.94
TMLE100C20MP11	XAFC36D	1.02	1.05	0.98
TMLE100C20MP11	XAFD42E	1.01	0.97	0.95
TMLE100C20MP11	XAHC36D	1.02	1.05	0.98
TMLE100C20MP11	XAHC42E	1.00	0.95	0.94
TMLE100C20MP11	XAHD42E	1.00	0.95	0.94
TMLE120C16MP11	CF/CM42C	1.02	1.02	0.96
TMLE120C16MP11	XAF/XAUC42E	1.01	1	0.95
TMLE120C16MP11	XAFC36D	1.01	1	0.95
TMLE120C16MP11	XAFD42E	1.01	1	0.95
TMLE120C16MP11	XAHC36D	1.01	0.99	0.95
TMLE120C16MP11	XAHC42E	1.01	0.99	0.95
TMLE120C16MP11	XAHD42E	1.01	1	0.95
TMLE120C20MP11	CF/CM42C	1.02	0.99	0.96
TMLE120C20MP11	XAF/XAUC42E	1.01	0.98	0.95
TMLE120C20MP11	XAFC36D	1.01	0.98	0.95
TMLE120C20MP11	XAFD42E	1.01	0.98	0.95
TMLE120C20MP11	XAHC36D	1.01	0.97	0.95
TMLE120C20MP11	XAHC42E	1.00	0.96	0.94
TMLE120C20MP11	XAHD42E	1.01	0.98	0.95
TMLE130D20MP11	XAFD42E	1.01	0.98	0.95
TMLE130D20MP11	XAHD42E	1.00	0.96	0.94
TMLV060A12MP12C	CF42B	0.99	0.96	0.95
TMLV060A12MP12C	XAF/XAUB36D	1.00	0.97	0.96
TMLV060A12MP12C	XAFB36E	0.99	0.97	0.95
TMLV060A12MP12C	XAHB36D	0.99	0.97	0.99
TMLV100C16MP12C	CF/CM42C	1.00	0.95	0.94
TMLV100C16MP12C	XAF/XAUC42E	1.00	0.97	0.94
TMLV100C16MP12C	XAFC36D	1.01	0.97	0.95
TMLV100C16MP12C	XAFD42E	1.00	0.97	0.94
TMLV100C16MP12C	XAHC36D	1.01	0.97	0.95
TMLV100C16MP12C	XAHC42E	1.00	0.97	0.94
TMLV100C16MP12C	XAHD42E	1.00	0.97	0.94
TMLV120C20MP12C	CF/CM42C	1.01	0.98	0.95
TMLV120C20MP12C	XAF/XAUC42E	1.01	0.98	0.95
TMLV120C20MP12C	XAFC36D	1.01	0.98	0.95
TMLV120C20MP12C	XAFD42E	1.01	0.98	0.95
TMLV120C20MP12C	XAHC36D	1.01	0.98	0.95
TMLV120C20MP12C	XAHC42E	1.01	0.98	0.95
TMLV120C20MP12C	XAHD42E	1.01	0.98	0.95
TP9C060B12MP13C	CF/CM42C	0.99	0.95	0.99
TP9C060B12MP13C	CF42B	0.99	0.95	0.99
TP9C060B12MP13C	XAF/XAUC42E	0.99	0.96	0.97
TP9C060B12MP13C	XAFB36E	0.99	0.96	0.99
TP9C060B12MP13C	XAHC42E	0.99	0.96	0.99
TP9C080B12MP13C	CF/CM42C	0.99	0.94	0.93
TP9C080B12MP13C	CF42B	0.99	0.94	0.95
TP9C080B12MP13C	XAF/XAUB36D	0.99	0.95	0.95
TP9C080B12MP13C	XAF/XAUC42E	0.99	0.95	0.95
TP9C080B12MP13C	XAFB36E	0.99	0.95	0.95

Table 32: Cool multiplier furnace - 3 ton

Furnace model	Indoor coil model	Total capacity	Sensible capacity	kW
TP9C080B12MP13C	XAFC36D	0.99	0.95	0.95
TP9C080B12MP13C	XAHB36D	0.99	0.98	0.99
TP9C080B12MP13C	XAHC36D	0.99	0.95	0.95
TP9C080B12MP13C	XAHC42E	0.99	0.95	0.95
TP9C080C16MP13C	CF/CM42C	0.99	0.95	0.93
TP9C080C16MP13C	XAF/XAUC42E	1.00	0.96	0.96
TP9C080C16MP13C	XAFC36D	1.01	0.99	0.96
TP9C080C16MP13C	XAFD42E	1.00	0.96	0.96
TP9C080C16MP13C	XAHC36D	1.00	0.99	1
TP9C080C16MP13C	XAHC42E	1.00	0.96	0.96
TP9C080C16MP13C	XAHD42E	1.00	0.96	0.96
TP9C100C16MP13C	CF/CM42C	0.99	0.94	0.93
TP9C100C16MP13C	XAF/XAUC42E	1.00	0.95	0.94
TP9C100C16MP13C	XAFC36D	1.00	0.95	0.94
TP9C100C16MP13C	XAFD42E	1.00	0.95	0.94
TP9C100C16MP13C	XAHC36D	0.99	0.95	0.93
TP9C100C16MP13C	XAHC42E	1.00	0.95	0.94
TP9C100C16MP13C	XAHD42E	1.00	0.95	0.94
TP9C100C20MP13C	CF/CM42C	1.01	0.99	0.95
TP9C100C20MP13C	XAF/XAUC42E	1.01	1	0.96
TP9C100C20MP13C	XAFC36D	1.01	1	0.97
TP9C100C20MP13C	XAFD42E	1.01	1	0.95
TP9C100C20MP13C	XAHC36D	1.01	1	0.97
TP9C100C20MP13C	XAHC42E	1.01	1	0.96
TP9C100C20MP13C	XAHD42E	1.01	1	0.96
TP9C120D20MP13C	XAFD42E	1.01	0.97	0.95
TP9C120D20MP13C	XAHD42E	1.00	0.96	0.94
TPLC060A12MP13C	CF42B	0.99	0.96	0.95
TPLC060A12MP13C	XAF/XAUB36D	1.00	0.97	0.96
TPLC060A12MP13C	XAFB36E	0.99	0.97	0.95
TPLC060A12MP13C	XAHB36D	0.99	0.97	0.99
TPLC080B12MP13C	CF/CM42C	0.99	0.95	0.99
TPLC080B12MP13C	CF42B	0.99	0.95	0.99
TPLC080B12MP13C	XAF/XAUB36D	0.99	0.95	0.99
TPLC080B12MP13C	XAF/XAUC42E	0.99	0.95	0.97
TPLC080B12MP13C	XAFC36D	0.99	0.95	0.99
TPLC080B12MP13C	XAHC36D	0.99	0.96	0.99
TPLC080B12MP13C	XAHC42E	0.99	0.95	0.99
TPLC080C16MP13C	CF/CM42C	1.00	0.95	0.94
TPLC080C16MP13C	XAF/XAUC42E	1.00	0.97	0.94
TPLC080C16MP13C	XAFC36D	1.01	0.97	0.95
TPLC080C16MP13C	XAFD42E	1.00	0.97	0.94
TPLC080C16MP13C	XAHC36D	1.01	0.97	0.95
TPLC080C16MP13C	XAHC42E	1.00	0.97	0.94
TPLC080C16MP13C	XAHD42E	1.00	0.97	0.94
TPLC100C16MP13C	CF/CM42C	1.00	0.95	0.94
TPLC100C16MP13C	XAF/XAUC42E	1.00	0.97	0.94
TPLC100C16MP13C	XAFC36D	1.01	0.97	0.95
TPLC100C16MP13C	XAFD42E	1.00	0.97	0.94
TPLC100C16MP13C	XAHC36D	1.01	0.97	0.95
TPLC100C16MP13C	XAHC42E	1.00	0.97	0.94
TPLC100C16MP13C	XAHD42E	1.00	0.97	0.94
TPLC100C20MP13C	CF/CM42C	1.01	0.98	0.95

Table 32: Cool multiplier furnace - 3 ton

Furnace model	Indoor coil model	Total capacity	Sensible capacity	kW
TPLC100C20MP13C	XAF/XAUC42E	1.01	0.98	0.95
TPLC100C20MP13C	XAFC36D	1.01	0.98	0.95
TPLC100C20MP13C	XAFD42E	1.01	0.98	0.95
TPLC100C20MP13C	XAHC36D	1.01	0.98	0.95
TPLC100C20MP13C	XAHC42E	1.01	0.98	0.95
TPLC100C20MP13C	XAHD42E	1.01	0.98	0.95
TPLC120C20MP13C	CF/CM42C	1.01	0.98	0.95
TPLC120C20MP13C	XAF/XAUC42E	1.01	0.98	0.95
TPLC120C20MP13C	XAFC36D	1.01	0.98	0.95
TPLC120C20MP13C	XAFD42E	1.01	0.98	0.95
TPLC120C20MP13C	XAHC36D	1.01	0.98	0.95
TPLC120C20MP13C	XAHC42E	1.01	0.98	0.95
TPLC120C20MP13C	XAHD42E	1.01	0.98	0.95
CP9C060B12MP13C	CF/CM42C	0.99	0.95	0.99
CP9C060B12MP13C	CF42B	0.99	0.95	0.99
CP9C060B12MP13C	XAF/XAUC42E	0.99	0.96	0.97
CP9C060B12MP13C	XAFB36E	0.99	0.96	0.99
CP9C060B12MP13C	XAHC42E	0.99	0.96	0.99
CP9C080B12MP13C	CF/CM42C	0.99	0.94	0.93
CP9C080B12MP13C	CF42B	0.99	0.94	0.95
CP9C080B12MP13C	XAF/XAUB36D	0.99	0.95	0.95
CP9C080B12MP13C	XAF/XAUC42E	0.99	0.95	0.95
CP9C080B12MP13C	XAFB36E	0.99	0.95	0.95
CP9C080B12MP13C	XAFC36D	0.99	0.95	0.95
CP9C080B12MP13C	XAHB36D	0.99	0.98	0.99
CP9C080B12MP13C	XAHC36D	0.99	0.95	0.95
CP9C080B12MP13C	XAHC42E	0.99	0.95	0.95
CP9C080C16MP13C	CF/CM42C	0.99	0.95	0.93
CP9C080C16MP13C	XAF/XAUC42E	1.00	0.96	0.96
CP9C080C16MP13C	XAFC36D	1.01	0.99	0.96
CP9C080C16MP13C	XAFD42E	1.00	0.96	0.96
CP9C080C16MP13C	XAHC36D	1.00	0.99	1
CP9C080C16MP13C	XAHC42E	1.00	0.96	0.96
CP9C080C16MP13C	XAHD42E	1.00	0.96	0.96
CP9C100C16MP13C	CF/CM42C	0.99	0.94	0.93
CP9C100C16MP13C	XAF/XAUC42E	1.00	0.95	0.94
CP9C100C16MP13C	XAFC36D	1.00	0.95	0.94
CP9C100C16MP13C	XAFD42E	1.00	0.95	0.94
CP9C100C16MP13C	XAHC36D	0.99	0.95	0.93
CP9C100C16MP13C	XAHC42E	1.00	0.95	0.94
CP9C100C16MP13C	XAHD42E	1.00	0.95	0.94
CP9C100C20MP13C	CF/CM42C	1.01	0.99	0.95
CP9C100C20MP13C	XAF/XAUC42E	1.01	1	0.96
CP9C100C20MP13C	XAFC36D	1.01	1	0.97
CP9C100C20MP13C	XAFD42E	1.01	1	0.95
CP9C100C20MP13C	XAHC36D	1.01	1	0.97
CP9C100C20MP13C	XAHC42E	1.01	1	0.96
CP9C100C20MP13C	XAHD42E	1.01	1	0.96
CP9C120D20MP13C	XAFD42E	1.01	0.97	0.95
CP9C120D20MP13C	XAHD42E	1.00	0.96	0.94
CPLC060A12MP13C	CF42B	0.99	0.96	0.95
CPLC060A12MP13C	XAF/XAUB36D	1.00	0.97	0.96
CPLC060A12MP13C	XAFB36E	0.99	0.97	0.95

Table 32: Cool multiplier furnace - 3 ton

Furnace model	Indoor coil model	Total capacity	Sensible capacity	kW
CPLC060A12MP13C	XAHB36D	0.99	0.97	0.99
CPLC080B12MP13C	CF/CM42C	0.99	0.95	0.99
CPLC080B12MP13C	CF42B	0.99	0.95	0.99
CPLC080B12MP13C	XAF/XAUB36D	0.99	0.95	0.99
CPLC080B12MP13C	XAF/XAUC42E	0.99	0.95	0.97
CPLC080B12MP13C	XAFC36D	0.99	0.95	0.99
CPLC080B12MP13C	XAHC36D	0.99	0.96	0.99
CPLC080B12MP13C	XAHC42E	0.99	0.95	0.99
CPLC080C16MP13C	CF/CM42C	1.00	0.95	0.94
CPLC080C16MP13C	XAF/XAUC42E	1.00	0.97	0.94
CPLC080C16MP13C	XAFC36D	1.01	0.97	0.95
CPLC080C16MP13C	XAFD42E	1.00	0.97	0.94
CPLC080C16MP13C	XAHC36D	1.01	0.97	0.95
CPLC080C16MP13C	XAHC42E	1.00	0.97	0.94
CPLC080C16MP13C	XAHD42E	1.00	0.97	0.94
CPLC100C16MP13C	CF/CM42C	1.00	0.95	0.94
CPLC100C16MP13C	XAF/XAUC42E	1.00	0.97	0.94
CPLC100C16MP13C	XAFC36D	1.01	0.97	0.95
CPLC100C16MP13C	XAFD42E	1.00	0.97	0.94
CPLC100C16MP13C	XAHC36D	1.01	0.97	0.95
CPLC100C16MP13C	XAHC42E	1.00	0.97	0.94
CPLC100C16MP13C	XAHD42E	1.00	0.97	0.94
CPLC100C20MP13C	CF/CM42C	1.01	0.98	0.95
CPLC100C20MP13C	XAF/XAUC42E	1.01	0.98	0.95
CPLC100C20MP13C	XAFC36D	1.01	0.98	0.95
CPLC100C20MP13C	XAFD42E	1.01	0.98	0.95
CPLC100C20MP13C	XAHC36D	1.01	0.98	0.95
CPLC100C20MP13C	XAHC42E	1.01	0.98	0.95
CPLC100C20MP13C	XAHD42E	1.01	0.98	0.95
CPLC120C20MP13C	CF/CM42C	1.01	0.98	0.95
CPLC120C20MP13C	XAF/XAUC42E	1.01	0.98	0.95
CPLC120C20MP13C	XAFC36D	1.01	0.98	0.95
CPLC120C20MP13C	XAFD42E	1.01	0.98	0.95
CPLC120C20MP13C	XAHC36D	1.01	0.98	0.95
CPLC120C20MP13C	XAHC42E	1.01	0.98	0.95
CPLC120C20MP13C	XAHD42E	1.01	0.98	0.95

Performance data - 3.5 ton

See the following tables for performance and multiplier data for the TCE2B42S21S unit.

Condenser only performance data - 3.5 ton

Table 33: TCE2B42S21S condenser table

Saturated suction at compressor		Outdoor ambient temperature															
Temperature	Pressure	55 °F		65 °F		75 °F		85 °F		95 °F		105 °F		115 °F		125 °F	
(°F)	(psig)	MBH	kW	MBH	kW	MBH	kW	MBH	kW	MBH	kW	MBH	kW	MBH	kW	MBH	kW
35	107	40.2	1.71	38.2	1.90	36.2	2.12	34.1	2.36	32.0	2.64	29.7	2.95	27.3	3.31	24.7	3.71
40	118	44.1	1.71	42.0	1.91	39.8	2.12	37.5	2.36	35.2	2.64	32.7	2.95	30.1	3.31	27.4	3.71
45	130	48.5	1.72	46.2	1.91	43.7	2.13	41.2	2.37	38.6	2.65	36.0	2.96	33.2	3.31	30.2	3.71
50	142	53.2	1.72	50.6	1.92	47.9	2.13	45.2	2.38	42.3	2.65	39.4	2.96	36.4	3.32	33.3	3.72
55	156	58.3	1.73	55.3	1.92	52.4	2.14	49.4	2.38	46.3	2.66	43.2	2.97	39.9	3.32	36.5	3.72

Condenser only performance data notes

- For outdoor unit (condenser) performance only. Data does not include the effects of air handler power or heat.
- Performance based on 15°F subcooling and 15°F superheat at the outdoor unit base valves:
  a. Increase capacity by 1% for each 2°F increase in subcooling.
  b. Decrease capacity by 1% for each 2°F decrease in subcooling.
- Maximum recommended condensing temperature is 140°F.

Cooling performance data - 3.5 ton

Table 34: Cooling performance data - TCE2B42S21S with indoor coil XAFC42EXXN1

Air temperature entering outdoor unit (°F)	ID CFM	1150					1350					1550				
	ID DB (°F)	80	80	75	80	80	80	80	75	80	80	80	80	75	80	80
	ID WB (°F)	57	62	62	67	72	57	62	62	67	72	57	62	62	67	72
55	T.C.	42.3	44.8	44.7	47.8	50.6	45.3	46.4	46.3	48.9	51.1	47.8	47.7	47.5	49.8	51.3
	S.C.	42.3	38.2	32.9	32.0	25.7	45.3	41.3	35.3	33.7	26.2	47.8	44.1	37.3	35.2	26.4
	kW	2.13	2.14	2.14	2.15	2.15	2.22	2.23	2.23	2.24	2.25	2.31	2.32	2.32	2.33	2.34
65	T.C.	39.2	42.2	42.2	46.3	50.6	41.1	43.4	43.3	47.4	51.8	42.7	44.0	44.1	48.2	52.5
	S.C.	39.2	36.2	31.1	31.3	26.1	41.1	39.0	33.0	33.1	27.3	42.7	41.3	34.6	34.8	28.3
	kW	2.36	2.36	2.36	2.35	2.35	2.44	2.44	2.44	2.44	2.44	2.53	2.53	2.53	2.53	2.53
75	T.C.	38.1	40.7	40.6	44.6	48.7	40.0	41.6	41.6	45.6	49.7	41.4	42.1	42.3	46.3	50.4
	S.C.	38.1	35.7	30.3	30.5	25.2	40.0	38.5	32.3	32.5	26.4	41.4	40.8	34.1	34.2	27.4
	kW	2.59	2.58	2.59	2.58	2.58	2.67	2.67	2.67	2.67	2.67	2.76	2.76	2.76	2.76	2.76
85	T.C.	36.7	38.9	38.7	42.5	46.4	38.4	39.5	39.6	43.5	47.3	39.8	39.9	40.2	44.0	47.9
	S.C.	36.7	35.1	29.4	29.5	24.0	38.4	37.6	31.4	31.5	25.2	39.8	39.9	33.3	33.2	26.2
	kW	2.85	2.85	2.85	2.85	2.85	2.94	2.94	2.94	2.94	2.94	3.03	3.03	3.03	3.02	3.02
95	T.C.	34.8	36.3	36.3	39.9	43.6	36.4	36.8	37.1	40.6	44.3	37.7	37.7	37.6	41.1	44.8
	S.C.	34.8	33.6	28.1	28.1	22.5	36.4	36.1	30.2	30.1	23.7	37.7	37.7	32.1	31.9	24.7
	kW	3.18	3.17	3.18	3.18	3.18	3.27	3.26	3.26	3.26	3.26	3.35	3.35	3.35	3.35	3.35
105	T.C.	33.2	34.2	34.3	37.7	41.3	34.7	34.7	35.0	38.3	41.9	35.8	35.9	35.3	38.7	42.3
	S.C.	33.2	32.5	27.2	27.2	21.6	34.7	34.7	29.3	29.1	22.8	35.8	35.9	31.1	31.0	23.8
	kW	3.53	3.52	3.53	3.53	3.53	3.61	3.61	3.61	3.61	3.61	3.70	3.70	3.70	3.70	3.70
115	T.C.	31.4	31.7	32.1	35.3	38.7	32.8	32.8	32.6	35.8	39.2	33.8	33.9	32.8	36.2	39.6
	S.C.	31.4	31.2	26.2	26.2	20.6	32.8	32.8	28.2	28.1	21.7	33.8	33.9	29.8	30.0	22.8
	kW	3.96	3.95	3.95	3.92	3.93	4.03	4.03	4.01	4.01	4.01	4.10	4.10	4.10	4.09	4.10

Table 34: Cooling performance data - TCE2B42S21S with indoor coil XAFC42EXXN1

Air temperature entering outdoor unit (°F)	ID CFM	1150					1350					1550				
	ID DB (°F)	80	80	75	80	80	80	80	75	80	80	80	80	75	80	80
	ID WB (°F)	57	62	62	67	72	57	62	62	67	72	57	62	62	67	72
125	T.C.	32.3	30.9	31.0	32.5	33.5	34.5	32.7	31.9	33.2	33.9	36.5	34.2	32.6	33.7	34.1
	S.C.	32.3	30.9	26.7	25.0	17.6	34.5	32.7	29.1	27.1	18.5	36.5	34.2	31.3	29.1	19.3
	kW	4.48	4.47	4.45	4.45	4.46	4.52	4.53	4.51	4.51	4.54	4.58	4.61	4.60	4.60	4.62

Cooling performance data notes

- All capacities include indoor fan heat. kW values are for the system (outdoor + indoor).
- Green shaded cells are ACCA (TVA) conditions.
- Blue shaded cells are AHRI conditions.

Multipliers for determining the performance with other indoor sections

ⓘ **Note:** For dry bulb temperatures different than those listed (between 73°F to 87°F), sensible capacity increases by 1060 BTUH per 1000 CFM per degree above the listed temperature and decreases by 1060 BTUH per 1000 CFM per degree below the listed temperature.

Cool multiplier airhandler - 3.5 ton

Table 35: Cool multiplier air handler - 3.5 ton

Air handler model	Indoor coil model	Total capacity	Sensible capacity	kW
—	CF/CM42C	1.00	0.99	1.00
—	CF/CM48C	1.00	1.00	1.00
—	CF/CM48D	1.00	1.00	1.00
—	XAF/XAUC48F	1.00	0.99	1.00
—	XAFD42E	1.00	1.00	1.00
—	XAFD48F	1.00	0.99	1.00
—	XAHC48F	1.00	0.99	1.00
—	XAHD42E	1.00	0.98	1.00
—	XAHD48F	1.00	0.99	1.00
AE42CX21	—	1.00	0.95	0.94
AE48CX21	—	1.00	0.95	0.92
AE48DX21	—	1.01	0.98	0.93
AVC42CX21	—	1.00	0.95	0.94
AVC48CX21	—	1.00	0.95	0.92
AVC48DX21	—	1.00	0.95	0.92
JHETC42FXXS2N1	—	1.01	0.98	0.93
JHVTC42FXXC2N1	—	1.01	0.96	0.92
JHVTD42FXXC2N1	—	1.01	0.95	0.92
JMET12CS2N1A	XAF/XAUC42E	1.01	0.99	0.93
JMET12CS2N1A	XAF/XAUC48F	1.01	0.98	0.93
JMET12CS2N1A	XAHC48F	1.01	0.98	0.93
JMET16CS2N1A	XAF/XAUC42E	1.02	1.07	0.96
JMET16CS2N1A	XAF/XAUC48F	1.02	1.05	0.96
JMET16CS2N1A	XAHC48F	1.02	1.05	0.96
JMET18DS2N1A	XAFD42E	1.04	1.07	0.96
JMET18DS2N1A	XAFD48F	1.04	1.06	0.96
JMET18DS2N1A	XAHD48F	1.02	1.05	0.94

Table 35: Cool multiplier air handler - 3.5 ton

Air handler model	Indoor coil model	Total capacity	Sensible capacity	kW
JMVT16CC2N1A	XAF/XAUC42E	1.00	0.95	0.90
JMVT16CC2N1A	XAF/XAUC48F	1.00	0.94	0.90
JMVT16CC2N1A	XAHC42E	1.00	0.95	0.92
JMVT16CC2N1A	XAHC48F	1.00	0.93	0.90
JMVT17CC2N1A	XAF/XAUC42E	1.00	0.95	0.90
JMVT17CC2N1A	XAF/XAUC48F	1.00	0.94	0.90
JMVT17CC2N1A	XAHC42E	1.00	0.95	0.92
JMVT17CC2N1A	XAHC48F	1.00	0.93	0.90
JMVT20DC2N1A	XAFD42E	1.01	0.97	0.92
JMVT20DC2N1A	XAFD48F	1.01	0.96	0.92
JMVT20DC2N1A	XAHD42E	1.01	0.97	0.92
JMVT20DC2N1A	XAHD48F	1.01	0.96	0.92
ME14DN21	CF/CM48D	1.01	0.97	0.93
ME16CN21	CF/CM42C	1.00	0.99	0.94
ME16CN21	CF/CM48C	1.01	1.01	0.95
ME20DN21	CF/CM48D	1.02	0.99	0.94
MVC12CN21	CF/CM42C	1.00	0.95	0.92
MVC12CN21	CF/CM48C	1.00	0.95	0.92
MVC14DN21	CF/CM48D	1.01	0.99	0.93
MVC16CN21	CF/CM42C	1.00	0.95	0.92
MVC16CN21	CF/CM48C	1.01	0.97	0.93
MVC20DN21	CF/CM48D	1.01	0.97	0.92

Cool multiplier furnace - 3.5 ton

Table 36: Cool multiplier furnace - 3.5 ton

Furnace model	Indoor coil model	Total capacity	Sensible capacity	kW
TL8E080C16UH11	CF/CM42C	0.99	0.95	0.93
TL8E080C16UH11	CF/CM48C	0.99	0.96	0.93
TL8E080C16UH11	CF/CM48D	0.99	0.96	0.93
TL8E080C16UH11	XAF/XAUC42E	1.00	0.96	0.94
TL8E080C16UH11	XAF/XAUC48F	1.00	0.96	0.94
TL8E080C16UH11	XAFD42E	1.00	0.97	0.94
TL8E080C16UH11	XAFD48F	1.00	0.96	0.94
TL8E080C16UH11	XAHC42E	0.99	0.94	0.93
TL8E080C16UH11	XAHC48F	1.00	0.96	0.94
TL8E080C16UH11	XAHD42E	1.00	0.96	0.94
TL8E080C16UH11	XAHD48F	1.00	0.96	0.94
TL8E100C20UH11	CF/CM42C	1.00	0.96	0.94
TL8E100C20UH11	CF/CM48C	1.01	0.97	0.95
TL8E100C20UH11	CF/CM48D	1.01	0.98	0.93
TL8E100C20UH11	XAF/XAUC42E	1.00	0.95	0.92
TL8E100C20UH11	XAF/XAUC48F	1.00	0.95	0.92
TL8E100C20UH11	XAFD42E	1.01	0.97	0.93
TL8E100C20UH11	XAFD48F	1.00	0.95	0.92
TL8E100C20UH11	XAHC42E	1.00	0.95	0.94
TL8E100C20UH11	XAHC48F	1.00	0.95	0.92
TL8E100C20UH11	XAHD42E	1.00	0.95	0.92
TL8E100C20UH11	XAHD48F	1.00	0.95	0.92
TL9E080C16UH11	CF/CM42C	1.00	0.97	0.96
TL9E080C16UH11	CF/CM48C	1.00	0.99	0.96
TL9E080C16UH11	CF/CM48D	1.00	0.99	0.96
TL9E080C16UH11	XAF/XAUC42E	1.00	0.97	0.96

Table 36: Cool multiplier furnace - 3.5 ton

Furnace model	Indoor coil model	Total capacity	Sensible capacity	kW
TL9E080C16UH11	XAF/XAUC48F	1.00	0.97	0.96
TL9E080C16UH11	XAFD42E	1.00	0.98	0.94
TL9E080C16UH11	XAFD48F	1.00	0.97	0.96
TL9E080C16UH11	XAHC42E	1.00	0.98	0.96
TL9E080C16UH11	XAHC48F	1.00	0.97	0.96
TL9E080C16UH11	XAHD42E	1.00	0.97	0.96
TL9E080C16UH11	XAHD48F	1.00	0.97	0.96
TL9E100C20UH11	CF/CM42C	0.99	0.95	0.93
TL9E100C20UH11	CF/CM48C	0.99	0.95	0.93
TL9E100C20UH11	CF/CM48D	1.01	0.99	0.95
TL9E100C20UH11	XAF/XAUC42E	1.00	0.96	0.94
TL9E100C20UH11	XAF/XAUC48F	1.00	0.95	0.94
TL9E100C20UH11	XAFD42E	1.00	0.97	0.94
TL9E100C20UH11	XAFD48F	1.00	0.95	0.94
TL9E100C20UH11	XAHC42E	1.00	0.95	0.94
TL9E100C20UH11	XAHC48F	1.00	0.95	0.94
TL9E100C20UH11	XAHD42E	1.00	0.96	0.94
TL9E100C20UH11	XAHD48F	1.00	0.95	0.94
TM8E080B12MP11	CF/CM42C	0.99	0.95	0.99
TM8E080B12MP11	CF/CM48C	0.99	0.96	0.99
TM8E080B12MP11	XAF/XAUC42E	0.99	0.95	0.99
TM8E080B12MP11	XAF/XAUC48F	0.99	0.95	0.99
TM8E080B12MP11	XAHC42E	0.99	0.95	0.99
TM8E080B12MP11	XAHC48F	0.99	0.95	0.99
TM8E080C16MP11	CF/CM42C	1.00	1.02	0.98
TM8E080C16MP11	CF/CM48C	1.00	1.03	0.98
TM8E080C16MP11	CF/CM48D	1.01	1.04	0.99
TM8E080C16MP11	XAF/XAUC42E	1.01	1.03	0.99
TM8E080C16MP11	XAF/XAUC48F	1.01	1.02	0.99
TM8E080C16MP11	XAFD42E	1.01	1.03	0.99
TM8E080C16MP11	XAFD48F	1.01	1.03	0.99
TM8E080C16MP11	XAHC42E	1.01	1.03	1.01
TM8E080C16MP11	XAHC48F	1.01	1.02	0.99
TM8E080C16MP11	XAHD42E	1.01	1.03	0.99
TM8E080C16MP11	XAHD48F	1.01	1.02	0.99
TM8E080C20MP11	CF/CM42C	1.00	0.97	0.94
TM8E080C20MP11	CF/CM48C	1.00	0.98	0.94
TM8E080C20MP11	CF/CM48D	1.01	0.99	0.95
TM8E080C20MP11	XAF/XAUC42E	1.01	0.98	0.95
TM8E080C20MP11	XAF/XAUC48F	1.00	0.96	0.94
TM8E080C20MP11	XAFD42E	1.01	0.98	0.93
TM8E080C20MP11	XAFD48F	1.00	0.97	0.94
TM8E080C20MP11	XAHC42E	1.00	0.97	0.94
TM8E080C20MP11	XAHC48F	1.00	0.97	0.94
TM8E080C20MP11	XAHD42E	1.00	0.97	0.94
TM8E080C20MP11	XAHD48F	1.00	0.97	0.94
TM8E100C16MP11	CF/CM42C	1.00	1.02	0.98
TM8E100C16MP11	CF/CM48C	1.00	1.03	0.98
TM8E100C16MP11	CF/CM48D	1.01	1.04	0.97
TM8E100C16MP11	XAF/XAUC42E	1.01	1.03	0.99
TM8E100C16MP11	XAF/XAUC48F	1.01	1.02	0.99
TM8E100C16MP11	XAFD42E	1.01	1.03	0.97
TM8E100C16MP11	XAFD48F	1.01	1.02	0.99

Table 36: Cool multiplier furnace - 3.5 ton

Furnace model	Indoor coil model	Total capacity	Sensible capacity	kW
TM8E100C16MP11	XAHC42E	1.01	1.03	1.01
TM8E100C16MP11	XAHC48F	1.01	1.02	0.99
TM8E100C16MP11	XAHD42E	1.01	1.03	0.99
TM8E100C16MP11	XAHD48F	1.01	1.02	0.99
TM8E100C20MP11	CF/CM42C	1.00	0.97	0.94
TM8E100C20MP11	CF/CM48C	1.00	0.97	0.94
TM8E100C20MP11	CF/CM48D	1.01	0.99	0.95
TM8E100C20MP11	XAF/XAUC42E	1.00	0.97	0.94
TM8E100C20MP11	XAF/XAUC48F	1.00	0.96	0.94
TM8E100C20MP11	XAFD42E	1.01	0.98	0.93
TM8E100C20MP11	XAFD48F	1.00	0.97	0.92
TM8E100C20MP11	XAHC42E	1.00	0.97	0.94
TM8E100C20MP11	XAHC48F	1.00	0.96	0.94
TM8E100C20MP11	XAHD42E	1.00	0.97	0.94
TM8E100C20MP11	XAHD48F	1.00	0.96	0.94
TM8E120C16MP11	CF/CM42C	1.00	1.02	0.98
TM8E120C16MP11	CF/CM48C	1.00	1.03	0.98
TM8E120C16MP11	CF/CM48D	1.01	1.04	0.97
TM8E120C16MP11	XAF/XAUC42E	1.01	1.03	0.99
TM8E120C16MP11	XAF/XAUC48F	1.01	1.02	0.99
TM8E120C16MP11	XAFD42E	1.01	1.03	0.97
TM8E120C16MP11	XAFD48F	1.01	1.03	0.97
TM8E120C16MP11	XAHC42E	1.01	1.03	0.99
TM8E120C16MP11	XAHC48F	1.01	1.02	0.99
TM8E120C16MP11	XAHD42E	1.01	1.03	0.99
TM8E120C16MP11	XAHD48F	1.01	1.03	0.97
TM8E120C20MP11	CF/CM42C	1.00	0.97	0.94
TM8E120C20MP11	CF/CM48C	1.01	0.99	0.95
TM8E120C20MP11	CF/CM48D	1.01	0.99	0.95
TM8E120C20MP11	XAF/XAUC42E	1.00	0.96	0.92
TM8E120C20MP11	XAF/XAUC48F	1.00	0.96	0.94
TM8E120C20MP11	XAFD42E	1.01	0.98	0.93
TM8E120C20MP11	XAFD48F	1.00	0.96	0.92
TM8E120C20MP11	XAHC42E	1.00	0.96	0.94
TM8E120C20MP11	XAHC48F	1.00	0.96	0.92
TM8E120C20MP11	XAHD42E	1.00	0.97	0.94
TM8E120C20MP11	XAHD48F	1.00	0.96	0.92
TM8E130D20MP11	CF/CM48D	1.01	0.98	0.93
TM8E130D20MP11	XAFD42E	1.00	0.96	0.92
TM8E130D20MP11	XAFD48F	1.00	0.95	0.92
TM8E130D20MP11	XAHD42E	1.00	0.95	0.92
TM8E130D20MP11	XAHD48F	1.00	0.95	0.92
TM8V080C16MP12C	CF/CM42C	0.99	0.93	0.93
TM8V080C16MP12C	CF/CM48C	0.99	0.94	0.93
TM8V080C16MP12C	CF/CM48D	0.99	0.93	0.93
TM8V080C16MP12C	XAF/XAUC42E	1.00	0.95	0.94
TM8V080C16MP12C	XAF/XAUC48F	0.99	0.93	0.93
TM8V080C16MP12C	XAFD42E	1.00	0.95	0.94
TM8V080C16MP12C	XAFD48F	0.99	0.93	0.93
TM8V080C16MP12C	XAHC42E	0.99	0.94	0.93
TM8V080C16MP12C	XAHC48F	0.99	0.93	0.93
TM8V080C16MP12C	XAHD42E	1.00	0.95	0.94
TM8V080C16MP12C	XAHD48F	0.99	0.93	0.93

Table 36: Cool multiplier furnace - 3.5 ton

Furnace model	Indoor coil model	Total capacity	Sensible capacity	kW
TM8V100C16MP12C	CF/CM42C	0.99	0.93	0.93
TM8V100C16MP12C	CF/CM48C	0.99	0.94	0.93
TM8V100C16MP12C	CF/CM48D	0.99	0.93	0.93
TM8V100C16MP12C	XAF/XAUC42E	1.00	0.95	0.94
TM8V100C16MP12C	XAF/XAUC48F	0.99	0.93	0.93
TM8V100C16MP12C	XAFD42E	1.00	0.95	0.94
TM8V100C16MP12C	XAFD48F	0.99	0.93	0.93
TM8V100C16MP12C	XAHC42E	0.99	0.94	0.93
TM8V100C16MP12C	XAHC48F	0.99	0.93	0.93
TM8V100C16MP12C	XAHD42E	1.00	0.95	0.94
TM8V100C16MP12C	XAHD48F	0.99	0.93	0.93
TM8V100C20MP12C	CF/CM42C	0.99	0.95	0.93
TM8V100C20MP12C	CF/CM48C	0.99	0.95	0.93
TM8V100C20MP12C	CF/CM48D	1.00	0.95	0.92
TM8V100C20MP12C	XAF/XAUC42E	1.00	0.96	0.94
TM8V100C20MP12C	XAF/XAUC48F	1.00	0.95	0.94
TM8V100C20MP12C	XAFD42E	1.00	0.97	0.94
TM8V100C20MP12C	XAFD48F	1.00	0.95	0.94
TM8V100C20MP12C	XAHC42E	1.00	0.96	0.94
TM8V100C20MP12C	XAHC48F	1.00	0.95	0.94
TM8V100C20MP12C	XAHD42E	1.00	0.96	0.94
TM8V100C20MP12C	XAHD48F	1.00	0.95	0.94
TM8V120C20MP12C	CF/CM42C	0.99	0.95	0.93
TM8V120C20MP12C	CF/CM48C	0.99	0.95	0.93
TM8V120C20MP12C	CF/CM48D	1.00	0.95	0.92
TM8V120C20MP12C	XAF/XAUC42E	1.00	0.96	0.94
TM8V120C20MP12C	XAF/XAUC48F	1.00	0.95	0.94
TM8V120C20MP12C	XAFD42E	1.00	0.97	0.94
TM8V120C20MP12C	XAFD48F	1.00	0.95	0.94
TM8V120C20MP12C	XAHC42E	1.00	0.96	0.94
TM8V120C20MP12C	XAHC48F	1.00	0.95	0.94
TM8V120C20MP12C	XAHD42E	1.00	0.96	0.94
TM8V120C20MP12C	XAHD48F	1.00	0.95	0.94
TM8Y080C16MP11	XAF/XAUC42E	1.00	0.95	0.94
TM8Y080C16MP11	XAF/XAUC48F	1.00	0.95	0.94
TM8Y080C16MP11	XAFD42E	1.00	0.95	0.94
TM8Y080C16MP11	XAFD48F	1.00	0.95	0.94
TM8Y080C16MP11	XAHC42E	1.00	0.99	0.96
TM8Y080C16MP11	XAHD42E	1.00	0.95	0.94
TM8Y080C16MP11	XAHD48F	1.00	0.95	0.94
TM8Y100C16MP11	XAF/XAUC42E	1.00	0.95	0.94
TM8Y100C16MP11	XAF/XAUC48F	1.00	0.95	0.94
TM8Y100C16MP11	XAFD42E	1.00	0.95	0.94
TM8Y100C16MP11	XAFD48F	1.00	0.95	0.94
TM8Y100C16MP11	XAHC42E	1.00	0.99	0.96
TM8Y100C16MP11	XAHD42E	1.00	0.95	0.94
TM8Y100C16MP11	XAHD48F	1.00	0.95	0.94
TM8Y100C20MP11	CF/CM42C	1.00	0.95	0.94
TM8Y100C20MP11	CF/CM48C	1.00	0.95	0.92
TM8Y100C20MP11	CF/CM48D	1.00	0.96	0.92
TM8Y100C20MP11	XAF/XAUC42E	1.01	1.01	0.95
TM8Y100C20MP11	XAF/XAUC48F	1.00	0.94	0.92
TM8Y100C20MP11	XAFD42E	1.00	0.95	0.92

Table 36: Cool multiplier furnace - 3.5 ton

Furnace model	Indoor coil model	Total capacity	Sensible capacity	kW
TM8Y100C20MP11	XAFD48F	1.00	0.94	0.92
TM8Y100C20MP11	XAHC42E	1.01	1.00	0.95
TM8Y100C20MP11	XAHD42E	1.01	1.01	0.95
TM8Y100C20MP11	XAHD48F	1.00	0.94	0.92
TM8Y120C20MP11	CF/CM42C	1.00	0.95	0.94
TM8Y120C20MP11	CF/CM48C	1.00	0.95	0.92
TM8Y120C20MP11	CF/CM48D	1.00	0.96	0.92
TM8Y120C20MP11	XAF/XAUC42E	1.01	1.01	0.95
TM8Y120C20MP11	XAF/XAUC48F	1.00	0.94	0.92
TM8Y120C20MP11	XAFD42E	1.00	0.95	0.92
TM8Y120C20MP11	XAFD48F	1.00	0.94	0.92
TM8Y120C20MP11	XAHC42E	1.01	1.00	0.95
TM8Y120C20MP11	XAHD42E	1.01	1.01	0.95
TM8Y120C20MP11	XAHD48F	1.00	0.94	0.92
TM9E080B12MP12	CF/CM42C	0.99	0.95	0.99
TM9E080B12MP12	CF/CM48C	0.99	0.96	0.99
TM9E080B12MP12	XAF/XAUC42E	0.99	0.95	0.99
TM9E080B12MP12	XAF/XAUC48F	0.99	0.95	0.97
TM9E080B12MP12	XAHC42E	0.99	0.95	0.99
TM9E080B12MP12	XAHC48F	0.99	0.95	0.97
TM9E080C16MP12	CF/CM42C	1.00	1.01	0.98
TM9E080C16MP12	CF/CM48C	1.00	1.02	0.98
TM9E080C16MP12	CF/CM48D	1.00	1.03	0.98
TM9E080C16MP12	XAF/XAUC42E	1.01	1.02	0.97
TM9E080C16MP12	XAF/XAUC48F	1.01	1.01	0.97
TM9E080C16MP12	XAFD42E	1.01	1.03	0.97
TM9E080C16MP12	XAFD48F	1.01	1.01	0.99
TM9E080C16MP12	XAHC42E	1.01	1.01	0.95
TM9E080C16MP12	XAHC48F	1.01	1.01	0.97
TM9E080C16MP12	XAHD42E	1.01	1.01	0.97
TM9E080C16MP12	XAHD48F	1.01	1.01	0.97
TM9E080C20MP12	CF/CM42C	0.99	0.95	0.93
TM9E080C20MP12	CF/CM48C	0.99	0.95	0.93
TM9E080C20MP12	CF/CM48D	1.01	0.99	0.95
TM9E080C20MP12	XAF/XAUC42E	1.00	0.96	0.94
TM9E080C20MP12	XAF/XAUC48F	1.00	0.95	0.94
TM9E080C20MP12	XAFD42E	1.00	0.96	0.92
TM9E080C20MP12	XAFD48F	1.00	0.96	0.92
TM9E080C20MP12	XAHC42E	1.04	1.08	0.96
TM9E080C20MP12	XAHC48F	1.00	0.95	0.92
TM9E080C20MP12	XAHD42E	1.00	0.96	0.94
TM9E080C20MP12	XAHD48F	1.00	0.95	0.94
TM9E100C16MP12	CF/CM42C	1.00	1.03	1.00
TM9E100C16MP12	CF/CM48C	1.00	1.03	1.00
TM9E100C16MP12	CF/CM48D	1.00	1.04	1.00
TM9E100C16MP12	XAF/XAUC48F	1.00	1.02	1.00
TM9E100C16MP12	XAFD42E	1.00	1.03	1.00
TM9E100C16MP12	XAFD48F	1.00	1.03	1.00
TM9E100C16MP12	XAHC48F	1.00	1.02	1.00
TM9E100C16MP12	XAHD48F	1.00	1.02	1.00
TM9E100C20MP12	CF/CM42C	0.99	0.95	0.93
TM9E100C20MP12	CF/CM48C	1.01	0.98	0.95
TM9E100C20MP12	CF/CM48D	1.01	0.98	0.95

Table 36: Cool multiplier furnace - 3.5 ton

Furnace model	Indoor coil model	Total capacity	Sensible capacity	kW
TM9E100C20MP12	XAF/XAUC42E	1.00	0.95	0.92
TM9E100C20MP12	XAF/XAUC48F	1.00	0.95	0.94
TM9E100C20MP12	XAFD42E	1.00	0.95	0.92
TM9E100C20MP12	XAFD48F	1.00	0.95	0.92
TM9E100C20MP12	XAHC42E	1.04	1.07	0.96
TM9E100C20MP12	XAHC48F	1.00	0.95	0.92
TM9E100C20MP12	XAHD42E	1.00	0.95	0.94
TM9E100C20MP12	XAHD48F	1.00	0.95	0.92
TM9E120D20MP12	CF/CM48D	1.00	0.98	0.94
TM9E120D20MP12	XAFD42E	1.01	0.98	0.95
TM9E120D20MP12	XAFD48F	1.00	0.97	0.94
TM9E120D20MP12	XAHD42E	1.00	0.97	0.94
TM9E120D20MP12	XAHD48F	1.00	0.96	0.94
TM9V080B12MP12C	CF/CM42C	0.99	0.94	0.99
TM9V080B12MP12C	CF/CM48C	0.99	0.95	0.99
TM9V080B12MP12C	XAF/XAUC42E	0.99	0.95	0.99
TM9V080B12MP12C	XAF/XAUC48F	0.99	0.94	0.99
TM9V080B12MP12C	XAHC48F	0.99	0.94	0.97
TM9V080C16MP12C	CF/CM42C	0.99	0.95	0.95
TM9V080C16MP12C	CF/CM48C	0.99	0.95	0.95
TM9V080C16MP12C	CF/CM48D	0.99	0.95	0.95
TM9V080C16MP12C	XAF/XAUC42E	1.00	0.97	0.96
TM9V080C16MP12C	XAF/XAUC48F	0.99	0.95	0.95
TM9V080C16MP12C	XAFD42E	1.00	0.96	0.96
TM9V080C16MP12C	XAFD48F	0.99	0.95	0.95
TM9V080C16MP12C	XAHC42E	0.99	0.95	0.97
TM9V080C16MP12C	XAHC48F	0.99	0.95	0.95
TM9V080C16MP12C	XAHD42E	0.99	0.95	0.95
TM9V080C16MP12C	XAHD48F	0.99	0.95	0.95
TM9V100C16MP12C	CF/CM42C	0.99	0.93	0.93
TM9V100C16MP12C	CF/CM48C	0.99	0.93	0.93
TM9V100C16MP12C	CF/CM48D	0.99	0.93	0.93
TM9V100C16MP12C	XAF/XAUC42E	1.00	0.95	0.94
TM9V100C16MP12C	XAF/XAUC48F	0.99	0.93	0.93
TM9V100C16MP12C	XAFD42E	1.00	0.95	0.94
TM9V100C16MP12C	XAFD48F	0.99	0.93	0.93
TM9V100C16MP12C	XAHC42E	1.00	0.95	0.94
TM9V100C16MP12C	XAHC48F	0.99	0.93	0.93
TM9V100C16MP12C	XAHD42E	1.00	0.95	0.94
TM9V100C16MP12C	XAHD48F	0.99	0.93	0.93
TM9V100C20MP12C	CF/CM42C	0.99	0.95	0.93
TM9V100C20MP12C	CF/CM48C	0.99	0.95	0.93
TM9V100C20MP12C	CF/CM48D	0.99	0.95	0.93
TM9V100C20MP12C	XAF/XAUC42E	1.00	0.97	0.94
TM9V100C20MP12C	XAF/XAUC48F	1.00	0.96	0.94
TM9V100C20MP12C	XAFD42E	1.00	0.97	0.94
TM9V100C20MP12C	XAFD48F	1.00	0.96	0.94
TM9V100C20MP12C	XAHC42E	1.00	0.97	0.94
TM9V100C20MP12C	XAHC48F	1.00	0.96	0.94
TM9V100C20MP12C	XAHD42E	1.00	0.97	0.94
TM9V100C20MP12C	XAHD48F	1.00	0.96	0.94
TM9V120D20MP12C	CF/CM48D	1.00	0.95	0.92
TM9V120D20MP12C	XAFD42E	1.00	0.95	0.92

Table 36: Cool multiplier furnace - 3.5 ton

Furnace model	Indoor coil model	Total capacity	Sensible capacity	kW
TM9V120D20MP12C	XAFD48F	1.00	0.94	0.92
TM9V120D20MP12C	XAHD42E	1.00	0.95	0.94
TM9V120D20MP12C	XAHD48F	1.00	0.94	0.92
TM9Y080B12MP11	CF/CM42C	0.99	0.95	0.99
TM9Y080B12MP11	CF/CM48C	0.99	0.95	0.99
TM9Y080B12MP11	XAF/XAUC48F	0.99	0.94	0.99
TM9Y080B12MP11	XAHC48F	0.99	0.94	0.99
TM9Y080C16MP11	CF/CM42C	0.99	0.96	0.97
TM9Y080C16MP11	CF/CM48C	0.99	0.96	0.97
TM9Y080C16MP11	CF/CM48D	1.00	0.98	0.96
TM9Y080C16MP11	XAF/XAUC42E	1.00	0.97	0.96
TM9Y080C16MP11	XAF/XAUC48F	0.99	0.95	0.95
TM9Y080C16MP11	XAFD42E	1.00	0.97	0.96
TM9Y080C16MP11	XAFD48F	1.00	0.97	0.96
TM9Y080C16MP11	XAHC42E	0.99	0.95	0.95
TM9Y080C16MP11	XAHC48F	1.00	0.97	0.96
TM9Y080C16MP11	XAHD42E	1.00	0.97	0.96
TM9Y080C16MP11	XAHD48F	1.00	0.97	0.96
TM9Y100C16MP11	CF/CM42C	0.99	0.96	0.97
TM9Y100C16MP11	CF/CM48C	1.00	0.98	0.96
TM9Y100C16MP11	CF/CM48D	1.00	0.98	0.96
TM9Y100C16MP11	XAF/XAUC42E	1.00	0.97	0.96
TM9Y100C16MP11	XAF/XAUC48F	0.99	0.95	0.95
TM9Y100C16MP11	XAFD42E	1.00	0.97	0.96
TM9Y100C16MP11	XAFD48F	1.00	0.97	0.96
TM9Y100C16MP11	XAHC42E	0.99	0.95	0.97
TM9Y100C16MP11	XAHC48F	1.00	0.97	0.96
TM9Y100C16MP11	XAHD42E	1.00	0.97	0.96
TM9Y100C16MP11	XAHD48F	1.00	0.97	0.96
TM9Y100C20MP11	CF/CM42C	0.99	0.93	0.93
TM9Y100C20MP11	CF/CM48C	0.99	0.94	0.93
TM9Y100C20MP11	CF/CM48D	0.99	0.94	0.93
TM9Y100C20MP11	XAF/XAUC42E	1.00	1.00	0.96
TM9Y100C20MP11	XAF/XAUC48F	1.00	0.99	0.96
TM9Y100C20MP11	XAFD42E	1.01	1.01	0.97
TM9Y100C20MP11	XAFD48F	1.01	1.01	0.97
TM9Y100C20MP11	XAHC42E	1.00	0.99	0.98
TM9Y100C20MP11	XAHC48F	1.00	0.99	0.96
TM9Y100C20MP11	XAHD42E	1.00	1.00	0.96
TM9Y100C20MP11	XAHD48F	1.00	0.99	0.96
TM9Y120D20MP11	CF/CM48D	1.00	0.97	0.94
TM9Y120D20MP11	XAFD42E	1.00	0.95	0.92
TM9Y120D20MP11	XAFD48F	1.00	0.95	0.94
TM9Y120D20MP11	XAHD42E	1.00	0.95	0.94
TM9Y120D20MP11	XAHD48F	1.00	0.95	0.94
TMLE080B12MP11	CF/CM42C	0.99	0.95	0.99
TMLE080B12MP11	CF/CM48C	0.99	0.96	0.99
TMLE080B12MP11	XAF/XAUC42E	0.99	0.95	0.99
TMLE080B12MP11	XAF/XAUC48F	0.99	0.95	0.99
TMLE080B12MP11	XAHC42E	0.99	0.95	0.99
TMLE080B12MP11	XAHC48F	0.99	0.95	0.99
TMLE080C16MP11	CF/CM42C	1.00	1.02	0.98
TMLE080C16MP11	CF/CM48C	1.00	1.03	0.98

Table 36: Cool multiplier furnace - 3.5 ton

Furnace model	Indoor coil model	Total capacity	Sensible capacity	kW
TMLE080C16MP11	CF/CM48D	1.01	1.04	0.99
TMLE080C16MP11	XAF/XAUC42E	1.01	1.03	0.99
TMLE080C16MP11	XAF/XAUC48F	1.01	1.02	0.99
TMLE080C16MP11	XAFD42E	1.01	1.03	0.99
TMLE080C16MP11	XAFD48F	1.01	1.03	0.99
TMLE080C16MP11	XAHC42E	1.01	1.03	1.01
TMLE080C16MP11	XAHC48F	1.01	1.02	0.99
TMLE080C16MP11	XAHD42E	1.01	1.03	0.99
TMLE080C16MP11	XAHD48F	1.01	1.02	0.99
TMLE080C20MP11	CF/CM42C	1.00	0.97	0.94
TMLE080C20MP11	CF/CM48C	1.00	0.98	0.94
TMLE080C20MP11	CF/CM48D	1.01	0.99	0.95
TMLE080C20MP11	XAF/XAUC42E	1.01	0.98	0.95
TMLE080C20MP11	XAF/XAUC48F	1.00	0.96	0.94
TMLE080C20MP11	XAFD42E	1.01	0.98	0.93
TMLE080C20MP11	XAFD48F	1.00	0.97	0.94
TMLE080C20MP11	XAHC42E	1.00	0.97	0.94
TMLE080C20MP11	XAHC48F	1.00	0.97	0.94
TMLE080C20MP11	XAHD42E	1.00	0.97	0.94
TMLE080C20MP11	XAHD48F	1.00	0.97	0.94
TMLE100C16MP11	CF/CM42C	1.00	1.02	0.98
TMLE100C16MP11	CF/CM48C	1.00	1.03	0.98
TMLE100C16MP11	CF/CM48D	1.01	1.04	0.97
TMLE100C16MP11	XAF/XAUC42E	1.01	1.03	0.99
TMLE100C16MP11	XAF/XAUC48F	1.01	1.02	0.99
TMLE100C16MP11	XAFD42E	1.01	1.03	0.97
TMLE100C16MP11	XAFD48F	1.01	1.02	0.99
TMLE100C16MP11	XAHC42E	1.01	1.03	1.01
TMLE100C16MP11	XAHC48F	1.01	1.02	0.99
TMLE100C16MP11	XAHD42E	1.01	1.03	0.99
TMLE100C16MP11	XAHD48F	1.01	1.02	0.99
TMLE100C20MP11	CF/CM42C	1.00	0.97	0.94
TMLE100C20MP11	CF/CM48C	1.00	0.97	0.94
TMLE100C20MP11	CF/CM48D	1.01	0.99	0.95
TMLE100C20MP11	XAF/XAUC42E	1.00	0.97	0.94
TMLE100C20MP11	XAF/XAUC48F	1.00	0.96	0.94
TMLE100C20MP11	XAFD42E	1.01	0.98	0.93
TMLE100C20MP11	XAFD48F	1.00	0.97	0.92
TMLE100C20MP11	XAHC42E	1.00	0.97	0.94
TMLE100C20MP11	XAHC48F	1.00	0.96	0.94
TMLE100C20MP11	XAHD42E	1.00	0.97	0.94
TMLE100C20MP11	XAHD48F	1.00	0.96	0.94
TMLE120C16MP11	CF/CM42C	1.00	1.02	0.98
TMLE120C16MP11	CF/CM48C	1.00	1.03	0.98
TMLE120C16MP11	CF/CM48D	1.01	1.04	0.97
TMLE120C16MP11	XAF/XAUC42E	1.01	1.03	0.99
TMLE120C16MP11	XAF/XAUC48F	1.01	1.02	0.99
TMLE120C16MP11	XAFD42E	1.01	1.03	0.97
TMLE120C16MP11	XAFD48F	1.01	1.03	0.97
TMLE120C16MP11	XAHC42E	1.01	1.03	0.99
TMLE120C16MP11	XAHC48F	1.01	1.02	0.99
TMLE120C16MP11	XAHD42E	1.01	1.03	0.99
TMLE120C16MP11	XAHD48F	1.01	1.03	0.97

Table 36: Cool multiplier furnace - 3.5 ton

Furnace model	Indoor coil model	Total capacity	Sensible capacity	kW
TMLE120C20MP11	CF/CM42C	1.00	0.97	0.94
TMLE120C20MP11	CF/CM48C	1.01	0.99	0.95
TMLE120C20MP11	CF/CM48D	1.01	0.99	0.95
TMLE120C20MP11	XAF/XAUC42E	1.00	0.96	0.92
TMLE120C20MP11	XAF/XAUC48F	1.00	0.96	0.94
TMLE120C20MP11	XAFD42E	1.01	0.98	0.93
TMLE120C20MP11	XAFD48F	1.00	0.96	0.92
TMLE120C20MP11	XAHC42E	1.00	0.96	0.94
TMLE120C20MP11	XAHC48F	1.00	0.96	0.92
TMLE120C20MP11	XAHD42E	1.00	0.97	0.94
TMLE120C20MP11	XAHD48F	1.00	0.96	0.92
TMLE130D20MP11	CF/CM48D	1.01	0.98	0.93
TMLE130D20MP11	XAFD42E	1.00	0.96	0.92
TMLE130D20MP11	XAFD48F	1.00	0.95	0.92
TMLE130D20MP11	XAHD42E	1.00	0.95	0.92
TMLE130D20MP11	XAHD48F	1.00	0.95	0.92
TMLV100C16MP12C	CF/CM42C	0.99	0.93	0.93
TMLV100C16MP12C	CF/CM48C	0.99	0.94	0.93
TMLV100C16MP12C	CF/CM48D	0.99	0.93	0.93
TMLV100C16MP12C	XAF/XAUC42E	1.00	0.95	0.94
TMLV100C16MP12C	XAF/XAUC48F	0.99	0.93	0.93
TMLV100C16MP12C	XAFD42E	1.00	0.95	0.94
TMLV100C16MP12C	XAFD48F	0.99	0.93	0.93
TMLV100C16MP12C	XAHC42E	0.99	0.94	0.93
TMLV100C16MP12C	XAHC48F	0.99	0.93	0.93
TMLV100C16MP12C	XAHD42E	1.00	0.95	0.94
TMLV100C16MP12C	XAHD48F	0.99	0.93	0.93
TMLV120C20MP12C	CF/CM42C	0.99	0.95	0.93
TMLV120C20MP12C	CF/CM48C	0.99	0.95	0.93
TMLV120C20MP12C	CF/CM48D	1.00	0.95	0.92
TMLV120C20MP12C	XAF/XAUC42E	1.00	0.96	0.94
TMLV120C20MP12C	XAF/XAUC48F	1.00	0.95	0.94
TMLV120C20MP12C	XAFD42E	1.00	0.97	0.94
TMLV120C20MP12C	XAFD48F	1.00	0.95	0.94
TMLV120C20MP12C	XAHC42E	1.00	0.96	0.94
TMLV120C20MP12C	XAHC48F	1.00	0.95	0.94
TMLV120C20MP12C	XAHD42E	1.00	0.96	0.94
TMLV120C20MP12C	XAHD48F	1.00	0.95	0.94
TP9C080B12MP13C	CF/CM42C	0.99	0.94	0.99
TP9C080B12MP13C	CF/CM48C	0.99	0.95	0.99
TP9C080B12MP13C	XAF/XAUC42E	0.99	0.95	0.99
TP9C080B12MP13C	XAF/XAUC48F	0.99	0.94	0.99
TP9C080B12MP13C	XAHC48F	0.99	0.94	0.97
TP9C080C16MP13C	CF/CM42C	0.99	0.95	0.95
TP9C080C16MP13C	CF/CM48C	0.99	0.95	0.95
TP9C080C16MP13C	CF/CM48D	0.99	0.95	0.95
TP9C080C16MP13C	XAF/XAUC42E	1.00	0.97	0.96
TP9C080C16MP13C	XAF/XAUC48F	0.99	0.95	0.95
TP9C080C16MP13C	XAFD42E	1.00	0.96	0.96
TP9C080C16MP13C	XAFD48F	0.99	0.95	0.95
TP9C080C16MP13C	XAHC42E	0.99	0.95	0.97
TP9C080C16MP13C	XAHC48F	0.99	0.95	0.95
TP9C080C16MP13C	XAHD42E	0.99	0.95	0.95

Table 36: Cool multiplier furnace - 3.5 ton

Furnace model	Indoor coil model	Total capacity	Sensible capacity	kW
TP9C080C16MP13C	XAHD48F	0.99	0.95	0.95
TP9C100C16MP13C	CF/CM42C	0.99	0.93	0.93
TP9C100C16MP13C	CF/CM48C	0.99	0.93	0.93
TP9C100C16MP13C	CF/CM48D	0.99	0.93	0.93
TP9C100C16MP13C	XAF/XAUC42E	1.00	0.95	0.94
TP9C100C16MP13C	XAF/XAUC48F	0.99	0.93	0.93
TP9C100C16MP13C	XAFD42E	1.00	0.95	0.94
TP9C100C16MP13C	XAFD48F	0.99	0.93	0.93
TP9C100C16MP13C	XAHC42E	1.00	0.95	0.94
TP9C100C16MP13C	XAHC48F	0.99	0.93	0.93
TP9C100C16MP13C	XAHD42E	1.00	0.95	0.94
TP9C100C16MP13C	XAHD48F	0.99	0.93	0.93
TP9C100C20MP13C	CF/CM42C	0.99	0.95	0.93
TP9C100C20MP13C	CF/CM48C	0.99	0.95	0.93
TP9C100C20MP13C	CF/CM48D	0.99	0.95	0.93
TP9C100C20MP13C	XAF/XAUC42E	1.00	0.97	0.94
TP9C100C20MP13C	XAF/XAUC48F	1.00	0.96	0.94
TP9C100C20MP13C	XAFD42E	1.00	0.97	0.94
TP9C100C20MP13C	XAFD48F	1.00	0.96	0.94
TP9C100C20MP13C	XAHC42E	1.00	0.97	0.94
TP9C100C20MP13C	XAHC48F	1.00	0.96	0.94
TP9C100C20MP13C	XAHD42E	1.00	0.97	0.94
TP9C100C20MP13C	XAHD48F	1.00	0.96	0.94
TP9C120D20MP13C	CF/CM48D	1.00	0.95	0.92
TP9C120D20MP13C	XAFD42E	1.00	0.95	0.92
TP9C120D20MP13C	XAFD48F	1.00	0.94	0.92
TP9C120D20MP13C	XAHD42E	1.00	0.95	0.94
TP9C120D20MP13C	XAHD48F	1.00	0.94	0.92
TPLC080C16MP13C	CF/CM42C	0.99	0.93	0.93
TPLC080C16MP13C	CF/CM48C	0.99	0.94	0.93
TPLC080C16MP13C	CF/CM48D	0.99	0.93	0.93
TPLC080C16MP13C	XAF/XAUC42E	1.00	0.95	0.94
TPLC080C16MP13C	XAF/XAUC48F	0.99	0.93	0.93
TPLC080C16MP13C	XAFD42E	1.00	0.95	0.94
TPLC080C16MP13C	XAFD48F	0.99	0.93	0.93
TPLC080C16MP13C	XAHC42E	0.99	0.94	0.93
TPLC080C16MP13C	XAHC48F	0.99	0.93	0.93
TPLC080C16MP13C	XAHD42E	1.00	0.95	0.94
TPLC080C16MP13C	XAHD48F	0.99	0.93	0.93
TPLC100C16MP13C	CF/CM42C	0.99	0.93	0.93
TPLC100C16MP13C	CF/CM48C	0.99	0.94	0.93
TPLC100C16MP13C	CF/CM48D	0.99	0.93	0.93
TPLC100C16MP13C	XAF/XAUC42E	1.00	0.95	0.94
TPLC100C16MP13C	XAF/XAUC48F	0.99	0.93	0.93
TPLC100C16MP13C	XAFD42E	1.00	0.95	0.94
TPLC100C16MP13C	XAFD48F	0.99	0.93	0.93
TPLC100C16MP13C	XAHC42E	0.99	0.94	0.93
TPLC100C16MP13C	XAHC48F	0.99	0.93	0.93
TPLC100C16MP13C	XAHD42E	1.00	0.95	0.94
TPLC100C16MP13C	XAHD48F	0.99	0.93	0.93
TPLC100C20MP13C	CF/CM42C	0.99	0.95	0.93
TPLC100C20MP13C	CF/CM48C	0.99	0.95	0.93
TPLC100C20MP13C	CF/CM48D	1.00	0.95	0.92

Table 36: Cool multiplier furnace - 3.5 ton

Furnace model	Indoor coil model	Total capacity	Sensible capacity	kW
TPLC100C20MP13C	XAF/XAUC42E	1.00	0.96	0.94
TPLC100C20MP13C	XAF/XAUC48F	1.00	0.95	0.94
TPLC100C20MP13C	XAFD42E	1.00	0.97	0.94
TPLC100C20MP13C	XAFD48F	1.00	0.95	0.94
TPLC100C20MP13C	XAHC42E	1.00	0.96	0.94
TPLC100C20MP13C	XAHC48F	1.00	0.95	0.94
TPLC100C20MP13C	XAHD42E	1.00	0.96	0.94
TPLC100C20MP13C	XAHD48F	1.00	0.95	0.94
TPLC120C20MP13C	CF/CM42C	0.99	0.95	0.93
TPLC120C20MP13C	CF/CM48C	0.99	0.95	0.93
TPLC120C20MP13C	CF/CM48D	1.00	0.95	0.92
TPLC120C20MP13C	XAF/XAUC42E	1.00	0.96	0.94
TPLC120C20MP13C	XAF/XAUC48F	1.00	0.95	0.94
TPLC120C20MP13C	XAFD42E	1.00	0.97	0.94
TPLC120C20MP13C	XAFD48F	1.00	0.95	0.94
TPLC120C20MP13C	XAHC42E	1.00	0.96	0.94
TPLC120C20MP13C	XAHC48F	1.00	0.95	0.94
TPLC120C20MP13C	XAHD42E	1.00	0.96	0.94
TPLC120C20MP13C	XAHD48F	1.00	0.95	0.94
CP9C080B12MP13C	CF/CM42C	0.99	0.94	0.99
CP9C080B12MP13C	CF/CM48C	0.99	0.95	0.99
CP9C080B12MP13C	XAF/XAUC42E	0.99	0.95	0.99
CP9C080B12MP13C	XAF/XAUC48F	0.99	0.94	0.99
CP9C080B12MP13C	XAHC48F	0.99	0.94	0.97
CP9C080C16MP13C	CF/CM42C	0.99	0.95	0.95
CP9C080C16MP13C	CF/CM48C	0.99	0.95	0.95
CP9C080C16MP13C	CF/CM48D	0.99	0.95	0.95
CP9C080C16MP13C	XAF/XAUC42E	1.00	0.97	0.96
CP9C080C16MP13C	XAF/XAUC48F	0.99	0.95	0.95
CP9C080C16MP13C	XAFD42E	1.00	0.96	0.96
CP9C080C16MP13C	XAFD48F	0.99	0.95	0.95
CP9C080C16MP13C	XAHC42E	0.99	0.95	0.97
CP9C080C16MP13C	XAHC48F	0.99	0.95	0.95
CP9C080C16MP13C	XAHD42E	0.99	0.95	0.95
CP9C080C16MP13C	XAHD48F	0.99	0.95	0.95
CP9C100C16MP13C	CF/CM42C	0.99	0.93	0.93
CP9C100C16MP13C	CF/CM48C	0.99	0.93	0.93
CP9C100C16MP13C	CF/CM48D	0.99	0.93	0.93
CP9C100C16MP13C	XAF/XAUC42E	1.00	0.95	0.94
CP9C100C16MP13C	XAF/XAUC48F	0.99	0.93	0.93
CP9C100C16MP13C	XAFD42E	1.00	0.95	0.94
CP9C100C16MP13C	XAFD48F	0.99	0.93	0.93
CP9C100C16MP13C	XAHC42E	1.00	0.95	0.94
CP9C100C16MP13C	XAHC48F	0.99	0.93	0.93
CP9C100C16MP13C	XAHD42E	1.00	0.95	0.94
CP9C100C16MP13C	XAHD48F	0.99	0.93	0.93
CP9C100C20MP13C	CF/CM42C	0.99	0.95	0.93
CP9C100C20MP13C	CF/CM48C	0.99	0.95	0.93
CP9C100C20MP13C	CF/CM48D	0.99	0.95	0.93
CP9C100C20MP13C	XAF/XAUC42E	1.00	0.97	0.94
CP9C100C20MP13C	XAF/XAUC48F	1.00	0.96	0.94
CP9C100C20MP13C	XAFD42E	1.00	0.97	0.94
CP9C100C20MP13C	XAFD48F	1.00	0.96	0.94

Table 36: Cool multiplier furnace - 3.5 ton

Furnace model	Indoor coil model	Total capacity	Sensible capacity	kW
CP9C100C20MP13C	XAHC42E	1.00	0.97	0.94
CP9C100C20MP13C	XAHC48F	1.00	0.96	0.94
CP9C100C20MP13C	XAHD42E	1.00	0.97	0.94
CP9C100C20MP13C	XAHD48F	1.00	0.96	0.94
CP9C120D20MP13C	CF/CM48D	1.00	0.95	0.92
CP9C120D20MP13C	XAFD42E	1.00	0.95	0.92
CP9C120D20MP13C	XAFD48F	1.00	0.94	0.92
CP9C120D20MP13C	XAHD42E	1.00	0.95	0.94
CP9C120D20MP13C	XAHD48F	1.00	0.94	0.92
CPLC080C16MP13C	CF/CM42C	0.99	0.93	0.93
CPLC080C16MP13C	CF/CM48C	0.99	0.94	0.93
CPLC080C16MP13C	CF/CM48D	0.99	0.93	0.93
CPLC080C16MP13C	XAF/XAUC42E	1.00	0.95	0.94
CPLC080C16MP13C	XAF/XAUC48F	0.99	0.93	0.93
CPLC080C16MP13C	XAFD42E	1.00	0.95	0.94
CPLC080C16MP13C	XAFD48F	0.99	0.93	0.93
CPLC080C16MP13C	XAHC42E	0.99	0.94	0.93
CPLC080C16MP13C	XAHC48F	0.99	0.93	0.93
CPLC080C16MP13C	XAHD42E	1.00	0.95	0.94
CPLC080C16MP13C	XAHD48F	0.99	0.93	0.93
CPLC100C16MP13C	CF/CM42C	0.99	0.93	0.93
CPLC100C16MP13C	CF/CM48C	0.99	0.94	0.93
CPLC100C16MP13C	CF/CM48D	0.99	0.93	0.93
CPLC100C16MP13C	XAF/XAUC42E	1.00	0.95	0.94
CPLC100C16MP13C	XAF/XAUC48F	0.99	0.93	0.93
CPLC100C16MP13C	XAFD42E	1.00	0.95	0.94
CPLC100C16MP13C	XAFD48F	0.99	0.93	0.93
CPLC100C16MP13C	XAHC42E	0.99	0.94	0.93
CPLC100C16MP13C	XAHC48F	0.99	0.93	0.93
CPLC100C16MP13C	XAHD42E	1.00	0.95	0.94
CPLC100C16MP13C	XAHD48F	0.99	0.93	0.93
CPLC100C20MP13C	CF/CM42C	0.99	0.95	0.93
CPLC100C20MP13C	CF/CM48C	0.99	0.95	0.93
CPLC100C20MP13C	CF/CM48D	1.00	0.95	0.92
CPLC100C20MP13C	XAF/XAUC42E	1.00	0.96	0.94
CPLC100C20MP13C	XAF/XAUC48F	1.00	0.95	0.94
CPLC100C20MP13C	XAFD42E	1.00	0.97	0.94
CPLC100C20MP13C	XAFD48F	1.00	0.95	0.94
CPLC100C20MP13C	XAHC42E	1.00	0.96	0.94
CPLC100C20MP13C	XAHC48F	1.00	0.95	0.94
CPLC100C20MP13C	XAHD42E	1.00	0.96	0.94
CPLC100C20MP13C	XAHD48F	1.00	0.95	0.94
CPLC120C20MP13C	CF/CM42C	0.99	0.95	0.93
CPLC120C20MP13C	CF/CM48C	0.99	0.95	0.93
CPLC120C20MP13C	CF/CM48D	1.00	0.95	0.92
CPLC120C20MP13C	XAF/XAUC42E	1.00	0.96	0.94
CPLC120C20MP13C	XAF/XAUC48F	1.00	0.95	0.94
CPLC120C20MP13C	XAFD42E	1.00	0.97	0.94
CPLC120C20MP13C	XAFD48F	1.00	0.95	0.94
CPLC120C20MP13C	XAHC42E	1.00	0.96	0.94
CPLC120C20MP13C	XAHC48F	1.00	0.95	0.94
CPLC120C20MP13C	XAHD42E	1.00	0.96	0.94
CPLC120C20MP13C	XAHD48F	1.00	0.95	0.94

Performance data - 4 ton

See the following tables for performance and multiplier data for the TCE2B48S21S unit.

Condenser only performance data - 4 ton

Table 37: TCE2B48S21S Condenser Table

Saturated suction at compressor		Outdoor ambient temperature															
Temperature	Pressure	55 °F		65 °F		75 °F		85 °F		95 °F		105 °F		115 °F		125 °F	
(°F)	(psig)	MBH	kW	MBH	kW	MBH	kW	MBH	kW	MBH	kW	MBH	kW	MBH	kW	MBH	kW
35	107	48.3	1.99	46.1	2.33	43.6	2.65	40.8	2.97	37.9	3.31	34.9	3.68	31.7	4.11	28.5	4.60
40	118	53.1	1.99	50.6	2.33	47.8	2.66	44.9	2.99	41.7	3.34	38.5	3.72	35.2	4.14	31.7	4.64
45	130	58.2	1.97	55.4	2.32	52.4	2.66	49.2	3.00	45.8	3.36	42.3	3.75	38.8	4.18	35.1	4.67
50	142	63.7	1.95	60.6	2.31	57.2	2.66	53.7	3.01	50.1	3.37	46.4	3.77	42.6	4.20	38.7	4.70
55	156	69.5	1.92	66.1	2.29	62.4	2.64	58.6	3.00	54.7	3.38	50.7	3.78	46.7	4.22	42.5	4.72

Condenser only performance data notes

- For outdoor unit (condenser) performance only. Data does not include the effects of air handler power or heat.
- Performance based on 15°F subcooling and 15°F superheat at the outdoor unit base valves:
  a. Increase capacity by 1% for each 2°F increase in subcooling.
  b. Decrease capacity by 1% for each 2°F decrease in subcooling.
- Maximum recommended condensing temperature is 140°F.

Cooling performance data - 4 ton

Table 38: Cooling performance data - TCE2B48S21S with indoor coil XAFC48FXXN1

Air temperature entering outdoor unit (°F)	ID CFM	1325					1525					1725				
	ID DB (°F)	80	80	75	80	80	80	80	75	80	80	80	80	75	80	80
	ID WB (°F)	57	62	62	67	72	57	62	62	67	72	57	62	62	67	72
55	T.C.	44.4	48.0	47.8	52.3	56.6	45.9	49.0	48.7	53.5	57.9	46.8	49.6	49.3	54.3	58.8
	S.C.	44.4	40.0	34.0	33.8	27.8	45.9	42.2	35.5	35.5	29.1	46.8	43.9	36.6	36.9	30.1
	kW	2.58	2.56	2.57	2.55	2.53	2.66	2.64	2.65	2.63	2.62	2.74	2.73	2.74	2.72	2.71
65	T.C.	43.7	47.1	46.8	51.2	55.5	45.4	48.1	47.9	52.2	56.5	46.8	48.8	48.6	52.9	57.2
	S.C.	43.7	39.5	33.6	33.4	27.2	45.4	41.9	35.3	35.1	28.3	46.8	44.0	36.8	36.5	29.1
	kW	2.93	2.92	2.93	2.91	2.88	3.02	3.01	3.01	2.99	2.96	3.10	3.09	3.10	3.07	3.04
75	T.C.	42.6	45.5	45.3	49.5	53.7	44.3	46.4	46.2	50.4	54.6	45.5	46.9	46.8	51.0	55.2
	S.C.	42.6	39.0	32.9	32.9	26.5	44.3	41.4	34.6	34.5	27.5	45.5	43.4	36.2	36.0	28.4
	kW	3.24	3.24	3.25	3.24	3.22	3.33	3.33	3.33	3.32	3.30	3.42	3.41	3.42	3.40	3.38
85	T.C.	41.4	43.8	43.7	47.7	51.8	42.9	44.5	44.4	48.5	52.6	44.2	45.0	45.0	49.0	53.1
	S.C.	41.4	38.5	32.4	32.2	25.8	42.9	40.8	34.1	33.9	26.9	44.2	42.9	35.7	35.4	27.7
	kW	3.56	3.56	3.57	3.56	3.55	3.65	3.65	3.66	3.65	3.63	3.74	3.74	3.74	3.73	3.72
95	T.C.	40.2	42.1	42.1	46.0	50.0	41.7	42.7	42.8	46.7	50.7	42.9	43.1	43.2	47.2	51.2
	S.C.	40.2	38.0	31.9	31.8	25.4	41.7	40.4	33.7	33.6	26.4	42.9	42.4	35.3	35.1	27.4
	kW	3.93	3.93	3.93	3.94	3.93	4.02	4.02	4.02	4.02	4.02	4.11	4.11	4.11	4.11	4.10
105	T.C.	38.3	39.5	39.6	43.4	47.3	39.7	40.1	40.2	44.0	47.9	40.7	40.9	40.6	44.5	48.4
	S.C.	38.3	36.8	30.7	30.7	24.2	39.7	39.2	32.6	32.5	25.3	40.7	40.9	34.2	34.1	26.2
	kW	4.37	4.37	4.38	4.39	4.39	4.46	4.46	4.47	4.47	4.48	4.56	4.56	4.55	4.56	4.56
115	T.C.	36.2	36.7	36.9	40.5	44.3	37.5	37.5	37.4	41.1	44.8	38.6	38.6	37.7	41.5	45.3
	S.C.	36.2	35.6	29.6	29.5	23.0	37.5	37.5	31.4	31.3	24.1	38.6	38.6	33.1	33.1	25.1
	kW	4.93	4.92	4.93	4.91	4.92	5.01	5.01	4.99	5.00	5.01	5.08	5.08	5.07	5.08	5.09

Table 38: Cooling performance data - TCE2B48S21S with indoor coil XAFC48FXXN1

Air temperature entering outdoor unit (°F)	ID CFM	1325					1525					1725				
	ID DB (°F)	80	80	75	80	80	80	80	75	80	80	80	80	75	80	80
	ID WB (°F)	57	62	62	67	72	57	62	62	67	72	57	62	62	67	72
125	T.C.	33.0	33.2	33.0	36.6	40.2	34.0	34.6	33.8	38.0	42.5	34.9	35.9	34.4	39.2	44.1
	S.C.	33.0	33.2	27.7	27.7	21.1	34.0	34.6	29.7	30.2	23.5	34.9	35.9	31.7	32.3	25.4
	kW	5.67	5.70	5.66	5.67	5.66	5.76	5.77	5.76	5.73	5.73	5.80	5.81	5.81	5.80	5.82

Cooling performance data notes

- All capacities include indoor fan heat. kW values are for the system (outdoor + indoor).
- Green shaded cells are ACCA (TVA) conditions.
- Blue shaded cells are AHRI conditions.

Multipliers for determining the performance with other indoor sections

ⓘ **Note:** For dry bulb temperatures different than those listed (between 73°F to 87°F), sensible capacity increases by 1060 BTUH per 1000 CFM per degree above the listed temperature and decreases by 1060 BTUH per 1000 CFM per degree below the listed temperature.

Cool multiplier airhandler - 4 ton

Table 39: Cool multiplier air handler - 4 ton

Air handler model	Indoor coil model	Total capacity	Sensible capacity	kW
—	CF/CM48C	1.00	1.01	1
—	CF/CM48D	1.00	1.01	1
—	CF/CM60C	1.01	1.01	1.01
—	CF/CM60D	1.01	1.01	1.01
—	XAF/XAUC48F	1.00	0	1
—	XAF/XAUC60G	1.01	1.01	1.01
—	XAF/XAUD60G	1.01	1.01	1.01
—	XAFD48F	1.00	1	1
—	XAHC48F	1.00	1	1
—	XAHC60G	1.01	1.01	1.01
—	XAHD48F	1.00	1	1
—	XAHD60G	1.01	1.01	1.01
AE48CX21	—	1.01	0.99	0.95
AE48DX21	—	1.02	1.02	0.94
AE60CX22	—	1.02	1.01	0.96
AVC48CX21	—	0.99	0.95	0.93
AVC48DX21	—	0.99	0.94	0.91
AVC60CX22	—	1.01	0.98	0.97
JHETC48GXXS2N1	—	1.02	1.02	0.94
JHETD48GXXS2N1	—	1.02	0.97	0.92
JHVTC48GXXC2N1	—	1.02	0.96	0.92
JHVTD48GXXC2N1	—	1.02	0.98	0.92
JMET12CS2N1A	XAF/XAUC48F	0.99	0.93	0.93
JMET12CS2N1A	XAF/XAUC60G	1.02	0.96	0.94
JMET12CS2N1A	XAHC48F	0.99	0.93	0.93
JMET12CS2N1A	XAHC60G	1.02	0.96	0.94
JMET16CS2N1A	XAF/XAUC48F	1.01	1.01	0.97

Table 39: Cool multiplier air handler - 4 ton

Air handler model	Indoor coil model	Total capacity	Sensible capacity	kW
JMET16CS2N1A	XAF/XAUC60G	1.02	1.02	0.96
JMET16CS2N1A	XAHC48F	1.01	1.01	0.97
JMET16CS2N1A	XAHC60G	1.02	1.02	0.96
JMET18DS2N1A	XAF/XAUD60G	1.02	1.02	0.94
JMET18DS2N1A	XAFD48F	1.02	1.02	0.96
JMET18DS2N1A	XAHD48F	1.02	1.01	0.96
JMET18DS2N1A	XAHD60G	1.02	1.01	0.94
JMVT16CC2N1A	XAF/XAUC48F	1.01	0.97	0.95
JMVT16CC2N1A	XAF/XAUC60G	1.02	0.98	0.92
JMVT16CC2N1A	XAHC48F	1.01	0.97	0.95
JMVT16CC2N1A	XAHC60G	1.02	0.98	0.92
JMVT17CC2N1A	XAF/XAUC48F	1.01	0.97	0.95
JMVT17CC2N1A	XAF/XAUC60G	1.02	0.98	0.92
JMVT17CC2N1A	XAHC48F	1.01	0.97	0.95
JMVT17CC2N1A	XAHC60G	1.02	0.98	0.92
JMVT20DC2N1A	XAF/XAUD60G	1.02	0.96	0.92
JMVT20DC2N1A	XAFD48F	0.99	0.93	0.91
JMVT20DC2N1A	XAHD48F	0.99	0.93	0.91
JMVT20DC2N1A	XAHD60G	1.02	0.96	0.92
ME14DN21	CF/CM48D	1.00	0.96	0.92
ME14DN21	CF/CM60D	1.02	0.97	0.94
ME14DN41	CF/CM48D	1.01	0.98	0.95
ME14DN41	CF/CM60D	1.02	0.98	0.94
ME16CN21	CF/CM48C	1.01	0.98	0.95
ME16CN21	CF/CM60C	1.02	0.98	0.96
ME16CN41	CF/CM48C	1.01	0.98	0.95
ME16CN41	CF/CM60C	1.02	0.98	0.96
ME20DN21	CF/CM48D	0.99	0.94	0.91
ME20DN21	CF/CM60D	1.00	0.94	0.9
ME20DN41	CF/CM48D	0.99	0.94	0.91
ME20DN41	CF/CM60D	1.00	0.94	0.9
MVC12CN21	CF/CM48C	1.01	0.98	0.95
MVC12CN21	CF/CM60C	1.02	0.98	0.96
MVC14DN21	CF/CM48D	0.99	0.94	0.91
MVC14DN21	CF/CM60D	1.02	0.98	0.92
MVC16CN21	CF/CM48C	0.99	0.94	0.91
MVC16CN21	CF/CM60C	1.00	0.94	0.92
MVC20DN21	CF/CM48D	1.01	0.97	0.93
MVC20DN21	CF/CM60D	1.02	0.98	0.92

Cool multiplier furnace - 4 ton

Table 40: Cool multiplier furnace - 4 ton

Furnace model	Indoor coil model	Total capacity	Sensible capacity	kW
TL8E080C16UH11	CF/CM48C	1.00	0.99	0.98
TL8E080C16UH11	CF/CM48D	1.00	0.99	0.98
TL8E080C16UH11	CF/CM60C	1.01	0.99	0.97
TL8E080C16UH11	CF/CM60D	1.01	0.99	0.97
TL8E080C16UH11	XAF/XAUC48F	1.00	0.98	1
TL8E080C16UH11	XAF/XAUC60G	1.02	1	0.98
TL8E080C16UH11	XAF/XAUD60G	1.01	0.99	0.97
TL8E080C16UH11	XAFD48F	1.00	0.98	0.98
TL8E080C16UH11	XAHC48F	1.00	0.98	1

Table 40: Cool multiplier furnace - 4 ton

Furnace model	Indoor coil model	Total capacity	Sensible capacity	kW
TL8E080C16UH11	XAHC60G	1.02	1	0.98
TL8E080C16UH11	XAHD48F	1.00	0.98	1
TL8E080C16UH11	XAHD60G	1.01	0.98	1.01
TL8E100C20UH11	CF/CM48C	1.01	1.01	0.97
TL8E100C20UH11	CF/CM48D	1.01	1.01	0.97
TL8E100C20UH11	CF/CM60C	1.02	1.01	0.96
TL8E100C20UH11	CF/CM60D	1.01	1	0.95
TL8E100C20UH11	XAF/XAUC48F	1.01	0.99	0.97
TL8E100C20UH11	XAF/XAUC60G	1.02	1.01	0.96
TL8E100C20UH11	XAF/XAUD60G	1.01	0.99	0.95
TL8E100C20UH11	XAFD48F	1.01	0.99	0.97
TL8E100C20UH11	XAHC48F	1.01	0.99	0.97
TL8E100C20UH11	XAHC60G	1.02	1.01	0.96
TL8E100C20UH11	XAHD48F	1.01	0.99	0.97
TL8E100C20UH11	XAHD60G	1.02	1	0.96
TL9E080C16UH11	CF/CM48C	0.98	0.94	0.94
TL9E080C16UH11	CF/CM48D	0.98	0.94	0.94
TL9E080C16UH11	CF/CM60C	1.01	1	1.01
TL9E080C16UH11	CF/CM60D	0.99	0.94	0.95
TL9E080C16UH11	XAF/XAUC60G	1.01	1	1.01
TL9E080C16UH11	XAF/XAUD60G	1.01	1	1.01
TL9E080C16UH11	XAHC60G	1.01	0.96	0.97
TL9E100C20UH11	CF/CM48C	1.01	1	0.97
TL9E100C20UH11	CF/CM48D	1.01	1.01	0.97
TL9E100C20UH11	CF/CM60C	1.02	1.01	0.98
TL9E100C20UH11	CF/CM60D	1.01	1	0.97
TL9E100C20UH11	XAF/XAUC48F	1.00	0.98	0.98
TL9E100C20UH11	XAF/XAUC60G	1.02	1	0.98
TL9E100C20UH11	XAF/XAUD60G	1.01	0.99	0.97
TL9E100C20UH11	XAFD48F	1.00	0.98	0.96
TL9E100C20UH11	XAHC48F	1.00	0.98	0.98
TL9E100C20UH11	XAHC60G	1.02	1	0.98
TL9E100C20UH11	XAHD48F	1.00	0.98	0.96
TL9E100C20UH11	XAHD60G	1.02	1	0.98
TM8E080C16MP11	CF/CM48C	1.00	0.99	0.98
TM8E080C16MP11	CF/CM48D	1.01	1.01	0.99
TM8E080C16MP11	CF/CM60C	1.01	0.99	0.97
TM8E080C16MP11	CF/CM60D	1.01	1	0.97
TM8E080C16MP11	XAF/XAUC48F	1.00	0.98	0.98
TM8E080C16MP11	XAF/XAUC60G	1.02	1.01	0.98
TM8E080C16MP11	XAF/XAUD60G	1.01	0.99	0.97
TM8E080C16MP11	XAFD48F	1.00	0.99	0.98
TM8E080C16MP11	XAHC48F	1.00	0.98	0.98
TM8E080C16MP11	XAHC60G	1.01	0.99	0.97
TM8E080C16MP11	XAHD48F	1.00	0.98	0.98
TM8E080C16MP11	XAHD60G	1.02	1	0.98
TM8E080C20MP11	CF/CM48C	0.99	0.94	0.93
TM8E080C20MP11	CF/CM48D	0.99	0.94	0.93
TM8E080C20MP11	CF/CM60C	1.01	0.98	0.95
TM8E080C20MP11	CF/CM60D	1.00	0.95	0.94
TM8E080C20MP11	XAF/XAUC48F	1.00	0.96	0.96
TM8E080C20MP11	XAF/XAUC60G	1.02	0.99	0.96
TM8E080C20MP11	XAF/XAUD60G	1.01	0.98	0.95

Table 40: Cool multiplier furnace - 4 ton

Furnace model	Indoor coil model	Total capacity	Sensible capacity	kW
TM8E080C20MP11	XAFD48F	1.00	0.97	0.96
TM8E080C20MP11	XAHC48F	1.00	0.96	0.96
TM8E080C20MP11	XAHC60G	1.02	0.96	0.94
TM8E080C20MP11	XAHD48F	1.00	0.96	0.96
TM8E080C20MP11	XAHD60G	1.02	0.98	0.96
TM8E100C16MP11	CF/CM48C	1.00	0.99	0.98
TM8E100C16MP11	CF/CM48D	1.01	1.01	0.97
TM8E100C16MP11	CF/CM60C	1.01	0.99	0.97
TM8E100C16MP11	CF/CM60D	1.01	1	0.97
TM8E100C16MP11	XAF/XAUC48F	1.00	0.98	0.98
TM8E100C16MP11	XAF/XAUC60G	1.01	0.99	0.97
TM8E100C16MP11	XAF/XAUD60G	1.01	0.99	0.97
TM8E100C16MP11	XAFD48F	1.00	0.98	0.98
TM8E100C16MP11	XAHC48F	1.00	0.98	0.98
TM8E100C16MP11	XAHC60G	1.01	0.99	0.97
TM8E100C16MP11	XAHD48F	1.00	0.98	0.98
TM8E100C16MP11	XAHD60G	1.02	1	0.98
TM8E100C20MP11	CF/CM48C	1.00	0.97	0.96
TM8E100C20MP11	CF/CM48D	0.99	0.94	0.93
TM8E100C20MP11	CF/CM60C	1.01	0.97	0.95
TM8E100C20MP11	CF/CM60D	1.00	0.94	0.94
TM8E100C20MP11	XAF/XAUC48F	0.99	0.95	0.95
TM8E100C20MP11	XAF/XAUC60G	1.02	0.98	0.96
TM8E100C20MP11	XAF/XAUD60G	1.01	0.97	0.95
TM8E100C20MP11	XAFD48F	0.99	0.95	0.95
TM8E100C20MP11	XAHC48F	0.99	0.95	0.95
TM8E100C20MP11	XAHC60G	1.02	0.98	0.96
TM8E100C20MP11	XAHD48F	0.99	0.95	0.95
TM8E100C20MP11	XAHD60G	1.02	0.98	0.96
TM8E120C16MP11	CF/CM48C	1.00	0.99	0.98
TM8E120C16MP11	CF/CM48D	1.01	1.01	0.97
TM8E120C16MP11	CF/CM60C	1.01	0.99	0.97
TM8E120C16MP11	CF/CM60D	1.01	1	0.97
TM8E120C16MP11	XAF/XAUC48F	1.00	0.98	0.98
TM8E120C16MP11	XAF/XAUC60G	1.01	0.99	0.97
TM8E120C16MP11	XAF/XAUD60G	1.01	0.99	0.97
TM8E120C16MP11	XAFD48F	1.00	0.99	0.98
TM8E120C16MP11	XAHC48F	1.00	0.98	0.98
TM8E120C16MP11	XAHC60G	1.02	1.01	0.98
TM8E120C16MP11	XAHD48F	1.00	0.99	0.98
TM8E120C16MP11	XAHD60G	1.02	1	0.98
TM8E120C20MP11	CF/CM48C	0.99	0.95	0.95
TM8E120C20MP11	CF/CM48D	0.99	0.94	0.93
TM8E120C20MP11	CF/CM60C	1.00	0.96	0.94
TM8E120C20MP11	CF/CM60D	1.00	0.94	0.94
TM8E120C20MP11	XAF/XAUC48F	0.99	0.94	0.95
TM8E120C20MP11	XAF/XAUC60G	1.02	0.98	0.96
TM8E120C20MP11	XAF/XAUD60G	1.00	0.95	0.94
TM8E120C20MP11	XAFD48F	0.99	0.95	0.95
TM8E120C20MP11	XAHC48F	0.99	0.95	0.95
TM8E120C20MP11	XAHC60G	1.02	0.98	0.96
TM8E120C20MP11	XAHD48F	0.99	0.95	0.95
TM8E120C20MP11	XAHD60G	1.02	0.98	0.96

Table 40: Cool multiplier furnace - 4 ton

Furnace model	Indoor coil model	Total capacity	Sensible capacity	kW
TM8E130D20MP11	CF/CM48D	1.01	1.01	0.97
TM8E130D20MP11	CF/CM60D	1.02	1.01	0.98
TM8E130D20MP11	XAF/XAUD60G	1.02	1.01	0.96
TM8E130D20MP11	XAFD48F	1.01	1	0.97
TM8E130D20MP11	XAHD48F	1.00	0.98	0.96
TM8E130D20MP11	XAHD60G	1.02	1	0.98
TM8V080C16MP12C	CF/CM48C	1.00	0.98	0.96
TM8V080C16MP12C	CF/CM48D	0.99	0.96	0.95
TM8V080C16MP12C	CF/CM60C	1.01	0.98	0.97
TM8V080C16MP12C	CF/CM60D	1.00	0.96	0.96
TM8V080C16MP12C	XAF/XAUC48F	1.00	0.97	0.98
TM8V080C16MP12C	XAF/XAUC60G	1.02	0.99	0.98
TM8V080C16MP12C	XAF/XAUD60G	1.01	0.98	0.97
TM8V080C16MP12C	XAFD48F	1.00	0.97	0.98
TM8V080C16MP12C	XAHC48F	1.00	0.97	0.98
TM8V080C16MP12C	XAHC60G	1.02	0.99	0.98
TM8V080C16MP12C	XAHD48F	1.00	0.97	0.98
TM8V080C16MP12C	XAHD60G	1.02	0.99	0.98
TM8V100C16MP12C	CF/CM48C	1.00	0.98	0.96
TM8V100C16MP12C	CF/CM48D	0.99	0.96	0.95
TM8V100C16MP12C	CF/CM60C	1.01	0.98	0.97
TM8V100C16MP12C	CF/CM60D	1.00	0.96	0.96
TM8V100C16MP12C	XAF/XAUC48F	1.00	0.97	0.98
TM8V100C16MP12C	XAF/XAUC60G	1.02	0.99	0.98
TM8V100C16MP12C	XAF/XAUD60G	1.01	0.98	0.97
TM8V100C16MP12C	XAFD48F	1.00	0.97	0.98
TM8V100C16MP12C	XAHC48F	1.00	0.97	0.98
TM8V100C16MP12C	XAHC60G	1.02	0.99	0.98
TM8V100C16MP12C	XAHD48F	1.00	0.97	0.98
TM8V100C16MP12C	XAHD60G	1.02	0.99	0.98
TM8V100C20MP12C	CF/CM48C	0.99	0.94	0.95
TM8V100C20MP12C	CF/CM48D	0.99	0.94	0.93
TM8V100C20MP12C	CF/CM60C	1.00	0.95	0.94
TM8V100C20MP12C	CF/CM60D	1.01	0.97	0.95
TM8V100C20MP12C	XAF/XAUC48F	0.99	0.95	0.95
TM8V100C20MP12C	XAF/XAUC60G	1.02	0.96	0.96
TM8V100C20MP12C	XAF/XAUD60G	1.01	0.98	0.95
TM8V100C20MP12C	XAFD48F	0.98	0.93	0.94
TM8V100C20MP12C	XAHC48F	0.98	0.93	0.94
TM8V100C20MP12C	XAHC60G	1.02	0.96	0.96
TM8V100C20MP12C	XAHD48F	0.98	0.93	0.94
TM8V100C20MP12C	XAHD60G	1.01	0.95	0.95
TM8V120C20MP12C	CF/CM48C	0.99	0.94	0.95
TM8V120C20MP12C	CF/CM48D	0.99	0.94	0.93
TM8V120C20MP12C	CF/CM60C	1.00	0.95	0.94
TM8V120C20MP12C	CF/CM60D	1.01	0.97	0.95
TM8V120C20MP12C	XAF/XAUC48F	0.99	0.95	0.95
TM8V120C20MP12C	XAF/XAUC60G	1.02	0.96	0.96
TM8V120C20MP12C	XAF/XAUD60G	1.01	0.98	0.95
TM8V120C20MP12C	XAFD48F	0.98	0.93	0.94
TM8V120C20MP12C	XAHC48F	0.98	0.93	0.94
TM8V120C20MP12C	XAHC60G	1.02	0.96	0.96
TM8V120C20MP12C	XAHD48F	0.98	0.93	0.94

Table 40: Cool multiplier furnace - 4 ton

Furnace model	Indoor coil model	Total capacity	Sensible capacity	kW
TM8V120C20MP12C	XAHD60G	1.01	0.95	0.95
TM8Y080C16MP11	XAF/XAUC48F	1.00	0.97	0.98
TM8Y080C16MP11	XAF/XAUC60G	1.02	0.99	0.98
TM8Y080C16MP11	XAF/XAUD60G	1.01	0.98	0.97
TM8Y080C16MP11	XAFD48F	1.00	0.97	0.98
TM8Y080C16MP11	XAHC60G	1.02	0.99	0.98
TM8Y080C16MP11	XAHD48F	1.00	0.97	0.98
TM8Y080C16MP11	XAHD60G	1.02	0.99	0.98
TM8Y100C16MP11	XAF/XAUC48F	1.00	0.97	0.98
TM8Y100C16MP11	XAF/XAUC60G	1.02	0.99	0.98
TM8Y100C16MP11	XAF/XAUD60G	1.01	0.98	0.97
TM8Y100C16MP11	XAFD48F	1.00	0.97	0.98
TM8Y100C16MP11	XAHC60G	1.02	0.99	0.98
TM8Y100C16MP11	XAHD48F	1.00	0.97	0.98
TM8Y100C16MP11	XAHD60G	1.02	0.99	0.98
TM8Y100C20MP11	CF/CM48C	1.01	0.99	0.97
TM8Y100C20MP11	CF/CM48D	1.01	0.99	0.97
TM8Y100C20MP11	CF/CM60C	1.01	0.98	0.95
TM8Y100C20MP11	CF/CM60D	1.01	0.98	0.95
TM8Y100C20MP11	XAF/XAUC48F	0.99	0.95	0.95
TM8Y100C20MP11	XAF/XAUC60G	1.02	0.98	0.96
TM8Y100C20MP11	XAF/XAUD60G	1.01	0.97	0.95
TM8Y100C20MP11	XAFD48F	1.00	0.96	0.96
TM8Y100C20MP11	XAHC60G	1.02	0.99	0.96
TM8Y100C20MP11	XAHD48F	1.00	0.96	0.96
TM8Y100C20MP11	XAHD60G	1.02	0.98	0.96
TM8Y120C20MP11	CF/CM48C	1.01	0.99	0.97
TM8Y120C20MP11	CF/CM48D	1.01	0.99	0.97
TM8Y120C20MP11	CF/CM60C	1.01	0.98	0.95
TM8Y120C20MP11	CF/CM60D	1.01	0.98	0.95
TM8Y120C20MP11	XAF/XAUC48F	0.99	0.95	0.95
TM8Y120C20MP11	XAF/XAUC60G	1.02	0.98	0.96
TM8Y120C20MP11	XAF/XAUD60G	1.01	0.97	0.95
TM8Y120C20MP11	XAFD48F	1.00	0.96	0.96
TM8Y120C20MP11	XAHC60G	1.02	0.99	0.96
TM8Y120C20MP11	XAHD48F	1.00	0.96	0.96
TM8Y120C20MP11	XAHD60G	1.02	0.98	0.96
TM9E080C16MP12	CF/CM48C	1.00	0.99	0.98
TM9E080C16MP12	CF/CM48D	1.00	0.99	0.98
TM9E080C16MP12	CF/CM60C	1.01	0.99	0.97
TM9E080C16MP12	CF/CM60D	1.01	1	0.99
TM9E080C16MP12	XAF/XAUC48F	1.00	0.98	0.98
TM9E080C16MP12	XAF/XAUC60G	1.02	1	0.98
TM9E080C16MP12	XAF/XAUD60G	1.01	0.99	0.97
TM9E080C16MP12	XAFD48F	1.00	0.98	0.98
TM9E080C16MP12	XAHC48F	1.00	0.98	0.98
TM9E080C16MP12	XAHC60G	1.02	1	0.98
TM9E080C16MP12	XAHD48F	1.00	0.98	0.98
TM9E080C16MP12	XAHD60G	1.02	0.99	0.98
TM9E080C20MP12	CF/CM48C	0.99	0.95	0.95
TM9E080C20MP12	CF/CM48D	1.00	0.97	0.96
TM9E080C20MP12	CF/CM60C	1.00	0.96	0.94
TM9E080C20MP12	CF/CM60D	1.01	0.97	0.95

Table 40: Cool multiplier furnace - 4 ton

Furnace model	Indoor coil model	Total capacity	Sensible capacity	kW
TM9E080C20MP12	XAF/XAUC48F	0.99	0.94	0.95
TM9E080C20MP12	XAF/XAUC60G	1.02	0.98	0.96
TM9E080C20MP12	XAF/XAUD60G	1.00	0.96	0.94
TM9E080C20MP12	XAFD48F	0.99	0.95	0.95
TM9E080C20MP12	XAHC48F	0.99	0.94	0.95
TM9E080C20MP12	XAHC60G	1.02	0.98	0.96
TM9E080C20MP12	XAHD48F	0.99	0.94	0.95
TM9E080C20MP12	XAHD60G	1.02	0.97	0.96
TM9E100C16MP12	CF/CM48C	1.00	1.01	1
TM9E100C16MP12	CF/CM48D	1.01	1.02	1.01
TM9E100C16MP12	CF/CM60C	1.01	1.01	1.01
TM9E100C16MP12	CF/CM60D	1.01	1.01	1.01
TM9E100C16MP12	XAF/XAUC48F	1.00	0.99	1
TM9E100C16MP12	XAF/XAUC60G	1.01	1.01	1.01
TM9E100C16MP12	XAF/XAUD60G	1.01	1.01	1.01
TM9E100C16MP12	XAFD48F	1.00	0.99	1
TM9E100C16MP12	XAHC48F	1.00	0.99	1
TM9E100C16MP12	XAHC60G	1.01	1.01	1.01
TM9E100C16MP12	XAHD48F	1.00	0.99	1
TM9E100C16MP12	XAHD60G	1.01	1	1.01
TM9E100C20MP12	CF/CM48C	0.99	0.95	0.95
TM9E100C20MP12	CF/CM48D	1.00	0.97	0.96
TM9E100C20MP12	CF/CM60C	1.00	0.96	0.94
TM9E100C20MP12	CF/CM60D	1.01	0.97	0.95
TM9E100C20MP12	XAF/XAUC48F	0.99	0.94	0.95
TM9E100C20MP12	XAF/XAUC60G	1.02	0.98	0.96
TM9E100C20MP12	XAF/XAUD60G	1.00	0.95	0.94
TM9E100C20MP12	XAFD48F	0.99	0.95	0.95
TM9E100C20MP12	XAHC48F	0.99	0.94	0.95
TM9E100C20MP12	XAHC60G	1.02	0.98	0.96
TM9E100C20MP12	XAHD48F	0.99	0.94	0.95
TM9E100C20MP12	XAHD60G	1.02	0.97	0.96
TM9E120D20MP12	CF/CM48D	0.99	0.94	0.93
TM9E120D20MP12	CF/CM60D	1.00	0.95	0.94
TM9E120D20MP12	XAF/XAUD60G	1.02	1.01	0.98
TM9E120D20MP12	XAFD48F	1.00	0.98	0.98
TM9E120D20MP12	XAHD48F	1.00	0.98	0.98
TM9E120D20MP12	XAHD60G	1.02	1.01	0.98
TM9V080C16MP12C	CF/CM48C	1.00	0.98	1
TM9V080C16MP12C	CF/CM48D	0.98	0.95	0.96
TM9V080C16MP12C	CF/CM60C	1.01	0.98	1.01
TM9V080C16MP12C	CF/CM60D	0.99	0.95	0.95
TM9V080C16MP12C	XAF/XAUC48F	0.99	0.96	0.99
TM9V080C16MP12C	XAF/XAUC60G	1.01	0.98	1.01
TM9V080C16MP12C	XAF/XAUD60G	1.01	0.98	1.01
TM9V080C16MP12C	XAFD48F	0.99	0.96	0.99
TM9V080C16MP12C	XAHC48F	0.99	0.96	0.99
TM9V080C16MP12C	XAHC60G	1.02	0.99	0.98
TM9V080C16MP12C	XAHD48F	0.99	0.96	0.99
TM9V080C16MP12C	XAHD60G	1.01	0.98	1.01
TM9V100C16MP12C	CF/CM48C	0.99	0.96	0.95
TM9V100C16MP12C	CF/CM48D	0.99	0.95	0.95
TM9V100C16MP12C	CF/CM60C	1.00	0.96	0.96

Table 40: Cool multiplier furnace - 4 ton

Furnace model	Indoor coil model	Total capacity	Sensible capacity	kW
TM9V100C16MP12C	CF/CM60D	1.00	0.95	0.94
TM9V100C16MP12C	XAF/XAUC48F	0.98	0.93	0.94
TM9V100C16MP12C	XAF/XAUC60G	1.02	0.98	0.96
TM9V100C16MP12C	XAF/XAUD60G	1.00	0.96	0.94
TM9V100C16MP12C	XAFD48F	0.98	0.93	0.94
TM9V100C16MP12C	XAHC48F	0.98	0.93	0.94
TM9V100C16MP12C	XAHC60G	1.02	0.97	0.96
TM9V100C16MP12C	XAHD48F	0.98	0.93	0.94
TM9V100C16MP12C	XAHD60G	1.01	0.96	0.95
TM9V100C20MP12C	CF/CM48C	0.99	0.96	0.95
TM9V100C20MP12C	CF/CM48D	0.99	0.95	0.95
TM9V100C20MP12C	CF/CM60C	1.00	0.96	0.96
TM9V100C20MP12C	CF/CM60D	1.00	0.96	0.96
TM9V100C20MP12C	XAF/XAUC48F	0.98	0.93	0.94
TM9V100C20MP12C	XAF/XAUC60G	1.02	0.98	0.98
TM9V100C20MP12C	XAF/XAUD60G	1.00	0.96	0.96
TM9V100C20MP12C	XAFD48F	0.99	0.95	0.95
TM9V100C20MP12C	XAHC48F	0.98	0.94	0.96
TM9V100C20MP12C	XAHC60G	1.02	0.98	0.98
TM9V100C20MP12C	XAHD48F	0.98	0.94	0.96
TM9V100C20MP12C	XAHD60G	1.01	0.97	0.97
TM9V120D20MP12C	CF/CM48D	1.00	0.97	0.96
TM9V120D20MP12C	CF/CM60D	1.01	0.97	0.95
TM9V120D20MP12C	XAF/XAUD60G	1.02	0.98	0.96
TM9V120D20MP12C	XAFD48F	1.00	0.96	0.96
TM9V120D20MP12C	XAHD48F	1.00	0.96	0.96
TM9V120D20MP12C	XAHD60G	1.02	0.98	0.96
TM9Y100C20MP11	CF/CM48C	1.00	0.98	0.98
TM9Y100C20MP11	CF/CM48D	1.00	0.98	0.96
TM9Y100C20MP11	CF/CM60C	1.01	0.98	0.97
TM9Y100C20MP11	CF/CM60D	1.01	0.99	0.97
TM9Y100C20MP11	XAF/XAUC48F	0.98	0.94	0.96
TM9Y100C20MP11	XAF/XAUC60G	1.02	0.99	0.98
TM9Y100C20MP11	XAF/XAUD60G	1.01	0.98	0.97
TM9Y100C20MP11	XAFD48F	1.00	0.97	0.98
TM9Y100C20MP11	XAHC48F	0.98	0.94	0.96
TM9Y100C20MP11	XAHC60G	1.02	0.99	0.98
TM9Y100C20MP11	XAHD48F	0.98	0.94	0.96
TM9Y100C20MP11	XAHD60G	1.00	0.96	0.96
TM9Y120D20MP11	CF/CM48D	1.01	1	0.97
TM9Y120D20MP11	CF/CM60D	1.02	1	0.98
TM9Y120D20MP11	XAF/XAUD60G	1.02	0.99	0.98
TM9Y120D20MP11	XAFD48F	1.00	0.98	0.96
TM9Y120D20MP11	XAHD48F	1.00	0.98	0.96
TM9Y120D20MP11	XAHD60G	1.02	0.99	0.98
TMLE080C16MP11	CF/CM48C	1.00	0.99	0.98
TMLE080C16MP11	CF/CM48D	1.01	1.01	0.99
TMLE080C16MP11	CF/CM60C	1.01	0.99	0.97
TMLE080C16MP11	CF/CM60D	1.01	1	0.97
TMLE080C16MP11	XAF/XAUC48F	1.00	0.98	0.98
TMLE080C16MP11	XAF/XAUC60G	1.02	1.01	0.98
TMLE080C16MP11	XAF/XAUD60G	1.01	0.99	0.97
TMLE080C16MP11	XAFD48F	1.00	0.99	0.98

Table 40: Cool multiplier furnace - 4 ton

Furnace model	Indoor coil model	Total capacity	Sensible capacity	kW
TMLE080C16MP11	XAHC48F	1.00	0.98	0.98
TMLE080C16MP11	XAHC60G	1.01	0.99	0.97
TMLE080C16MP11	XAHD48F	1.00	0.98	0.98
TMLE080C16MP11	XAHD60G	1.02	1	0.98
TMLE080C20MP11	CF/CM48C	0.99	0.94	0.93
TMLE080C20MP11	CF/CM48D	0.99	0.94	0.93
TMLE080C20MP11	CF/CM60C	1.01	0.98	0.95
TMLE080C20MP11	CF/CM60D	1.00	0.95	0.94
TMLE080C20MP11	XAF/XAUC48F	1.00	0.96	0.96
TMLE080C20MP11	XAF/XAUC60G	1.02	0.99	0.96
TMLE080C20MP11	XAF/XAUD60G	1.01	0.98	0.95
TMLE080C20MP11	XAFD48F	1.00	0.97	0.96
TMLE080C20MP11	XAHC48F	1.00	0.96	0.96
TMLE080C20MP11	XAHC60G	1.02	0.96	0.94
TMLE080C20MP11	XAHD48F	1.00	0.96	0.96
TMLE080C20MP11	XAHD60G	1.02	0.98	0.96
TMLE100C16MP11	CF/CM48C	1.00	0.99	0.98
TMLE100C16MP11	CF/CM48D	1.01	1.01	0.97
TMLE100C16MP11	CF/CM60C	1.01	0.99	0.97
TMLE100C16MP11	CF/CM60D	1.01	1	0.97
TMLE100C16MP11	XAF/XAUC48F	1.00	0.98	0.98
TMLE100C16MP11	XAF/XAUC60G	1.01	0.99	0.97
TMLE100C16MP11	XAF/XAUD60G	1.01	0.99	0.97
TMLE100C16MP11	XAFD48F	1.00	0.98	0.98
TMLE100C16MP11	XAHC48F	1.00	0.98	0.98
TMLE100C16MP11	XAHC60G	1.01	0.99	0.97
TMLE100C16MP11	XAHD48F	1.00	0.98	0.98
TMLE100C16MP11	XAHD60G	1.02	1	0.98
TMLE100C20MP11	CF/CM48C	1.00	0.97	0.96
TMLE100C20MP11	CF/CM48D	0.99	0.94	0.93
TMLE100C20MP11	CF/CM60C	1.01	0.97	0.95
TMLE100C20MP11	CF/CM60D	1.00	0.94	0.94
TMLE100C20MP11	XAF/XAUC48F	0.99	0.95	0.95
TMLE100C20MP11	XAF/XAUC60G	1.02	0.98	0.96
TMLE100C20MP11	XAF/XAUD60G	1.01	0.97	0.95
TMLE100C20MP11	XAFD48F	0.99	0.95	0.95
TMLE100C20MP11	XAHC48F	0.99	0.95	0.95
TMLE100C20MP11	XAHC60G	1.02	0.98	0.96
TMLE100C20MP11	XAHD48F	0.99	0.95	0.95
TMLE100C20MP11	XAHD60G	1.02	0.98	0.96
TMLE120C16MP11	CF/CM48C	1.00	0.99	0.98
TMLE120C16MP11	CF/CM48D	1.01	1.01	0.97
TMLE120C16MP11	CF/CM60C	1.01	0.99	0.97
TMLE120C16MP11	CF/CM60D	1.01	1	0.97
TMLE120C16MP11	XAF/XAUC48F	1.00	0.98	0.98
TMLE120C16MP11	XAF/XAUC60G	1.01	0.99	0.97
TMLE120C16MP11	XAF/XAUD60G	1.01	0.99	0.97
TMLE120C16MP11	XAFD48F	1.00	0.99	0.98
TMLE120C16MP11	XAHC48F	1.00	0.98	0.98
TMLE120C16MP11	XAHC60G	1.02	1.01	0.98
TMLE120C16MP11	XAHD48F	1.00	0.99	0.98
TMLE120C16MP11	XAHD60G	1.02	1	0.98
TMLE120C20MP11	CF/CM48C	0.99	0.95	0.95

Table 40: Cool multiplier furnace - 4 ton

Furnace model	Indoor coil model	Total capacity	Sensible capacity	kW
TMLE120C20MP11	CF/CM48D	0.99	0.94	0.93
TMLE120C20MP11	CF/CM60C	1.00	0.96	0.94
TMLE120C20MP11	CF/CM60D	1.00	0.94	0.94
TMLE120C20MP11	XAF/XAUC48F	0.99	0.94	0.95
TMLE120C20MP11	XAF/XAUC60G	1.02	0.98	0.96
TMLE120C20MP11	XAF/XAUD60G	1.00	0.95	0.94
TMLE120C20MP11	XAFD48F	0.99	0.95	0.95
TMLE120C20MP11	XAHC48F	0.99	0.95	0.95
TMLE120C20MP11	XAHC60G	1.02	0.98	0.96
TMLE120C20MP11	XAHD48F	0.99	0.95	0.95
TMLE120C20MP11	XAHD60G	1.02	0.98	0.96
TMLE130D20MP11	CF/CM48D	1.01	1.01	0.97
TMLE130D20MP11	CF/CM60D	1.02	1.01	0.98
TMLE130D20MP11	XAF/XAUD60G	1.02	1.01	0.96
TMLE130D20MP11	XAFD48F	1.01	1	0.97
TMLE130D20MP11	XAHD48F	1.00	0.98	0.96
TMLE130D20MP11	XAHD60G	1.02	1	0.98
TMLV100C16MP12C	CF/CM48C	1.00	0.98	0.96
TMLV100C16MP12C	CF/CM48D	0.99	0.96	0.95
TMLV100C16MP12C	CF/CM60C	1.01	0.98	0.97
TMLV100C16MP12C	CF/CM60D	1.00	0.96	0.96
TMLV100C16MP12C	XAF/XAUC48F	1.00	0.97	0.98
TMLV100C16MP12C	XAF/XAUC60G	1.02	0.99	0.98
TMLV100C16MP12C	XAF/XAUD60G	1.01	0.98	0.97
TMLV100C16MP12C	XAFD48F	1.00	0.97	0.98
TMLV100C16MP12C	XAHC48F	1.00	0.97	0.98
TMLV100C16MP12C	XAHC60G	1.02	0.99	0.98
TMLV100C16MP12C	XAHD48F	1.00	0.97	0.98
TMLV100C16MP12C	XAHD60G	1.02	0.99	0.98
TMLV120C20MP12C	CF/CM48C	0.99	0.94	0.95
TMLV120C20MP12C	CF/CM48D	0.99	0.94	0.93
TMLV120C20MP12C	CF/CM60C	1.00	0.95	0.94
TMLV120C20MP12C	CF/CM60D	1.01	0.97	0.95
TMLV120C20MP12C	XAF/XAUC48F	0.99	0.95	0.95
TMLV120C20MP12C	XAF/XAUC60G	1.02	0.96	0.96
TMLV120C20MP12C	XAF/XAUD60G	1.01	0.98	0.95
TMLV120C20MP12C	XAFD48F	0.98	0.93	0.94
TMLV120C20MP12C	XAHC48F	0.98	0.93	0.94
TMLV120C20MP12C	XAHC60G	1.02	0.96	0.96
TMLV120C20MP12C	XAHD48F	0.98	0.93	0.94
TMLV120C20MP12C	XAHD60G	1.01	0.95	0.95
TP9C080C16MP13C	CF/CM48C	1.00	0.98	1
TP9C080C16MP13C	CF/CM48D	0.98	0.95	0.96
TP9C080C16MP13C	CF/CM60C	1.01	0.98	1.01
TP9C080C16MP13C	CF/CM60D	0.99	0.95	0.95
TP9C080C16MP13C	XAF/XAUC48F	0.99	0.96	0.99
TP9C080C16MP13C	XAF/XAUC60G	1.01	0.98	1.01
TP9C080C16MP13C	XAF/XAUD60G	1.01	0.98	1.01
TP9C080C16MP13C	XAFD48F	0.99	0.96	0.99
TP9C080C16MP13C	XAHC48F	0.99	0.96	0.99
TP9C080C16MP13C	XAHC60G	1.02	0.99	0.98
TP9C080C16MP13C	XAHD48F	0.99	0.96	0.99
TP9C080C16MP13C	XAHD60G	1.01	0.98	1.01

Table 40: Cool multiplier furnace - 4 ton

Furnace model	Indoor coil model	Total capacity	Sensible capacity	kW
TP9C100C16MP13C	CF/CM48C	0.99	0.96	0.95
TP9C100C16MP13C	CF/CM48D	0.99	0.95	0.95
TP9C100C16MP13C	CF/CM60C	1.00	0.96	0.96
TP9C100C16MP13C	CF/CM60D	1.00	0.95	0.94
TP9C100C16MP13C	XAF/XAUC48F	0.98	0.93	0.94
TP9C100C16MP13C	XAF/XAUC60G	1.02	0.98	0.96
TP9C100C16MP13C	XAF/XAUD60G	1.00	0.96	0.94
TP9C100C16MP13C	XAFD48F	0.98	0.93	0.94
TP9C100C16MP13C	XAHC48F	0.98	0.93	0.94
TP9C100C16MP13C	XAHC60G	1.02	0.97	0.96
TP9C100C16MP13C	XAHD48F	0.98	0.93	0.94
TP9C100C16MP13C	XAHD60G	1.01	0.96	0.95
TP9C100C20MP13C	CF/CM48C	0.99	0.96	0.95
TP9C100C20MP13C	CF/CM48D	0.99	0.95	0.95
TP9C100C20MP13C	CF/CM60C	1.00	0.96	0.96
TP9C100C20MP13C	CF/CM60D	1.00	0.96	0.96
TP9C100C20MP13C	XAF/XAUC48F	0.98	0.93	0.94
TP9C100C20MP13C	XAF/XAUC60G	1.02	0.98	0.98
TP9C100C20MP13C	XAF/XAUD60G	1.00	0.96	0.96
TP9C100C20MP13C	XAFD48F	0.99	0.95	0.95
TP9C100C20MP13C	XAHC48F	0.98	0.94	0.96
TP9C100C20MP13C	XAHC60G	1.02	0.98	0.98
TP9C100C20MP13C	XAHD48F	0.98	0.94	0.96
TP9C100C20MP13C	XAHD60G	1.01	0.97	0.97
TP9C120D20MP13C	CF/CM48D	1.00	0.97	0.96
TP9C120D20MP13C	CF/CM60D	1.01	0.97	0.95
TP9C120D20MP13C	XAF/XAUD60G	1.02	0.98	0.96
TP9C120D20MP13C	XAFD48F	1.00	0.96	0.96
TP9C120D20MP13C	XAHD48F	1.00	0.96	0.96
TP9C120D20MP13C	XAHD60G	1.02	0.98	0.96
TPLC080C16MP13C	CF/CM48C	1.00	0.98	0.96
TPLC080C16MP13C	CF/CM48D	0.99	0.96	0.95
TPLC080C16MP13C	CF/CM60C	1.01	0.98	0.97
TPLC080C16MP13C	CF/CM60D	1.00	0.96	0.96
TPLC080C16MP13C	XAF/XAUC48F	1.00	0.97	0.98
TPLC080C16MP13C	XAF/XAUC60G	1.02	0.99	0.98
TPLC080C16MP13C	XAF/XAUD60G	1.01	0.98	0.97
TPLC080C16MP13C	XAFD48F	1.00	0.97	0.98
TPLC080C16MP13C	XAHC48F	1.00	0.97	0.98
TPLC080C16MP13C	XAHC60G	1.02	0.99	0.98
TPLC080C16MP13C	XAHD48F	1.00	0.97	0.98
TPLC080C16MP13C	XAHD60G	1.02	0.99	0.98
TPLC100C16MP13C	CF/CM48C	1.00	0.98	0.96
TPLC100C16MP13C	CF/CM48D	0.99	0.96	0.95
TPLC100C16MP13C	CF/CM60C	1.01	0.98	0.97
TPLC100C16MP13C	CF/CM60D	1.00	0.96	0.96
TPLC100C16MP13C	XAF/XAUC48F	1.00	0.97	0.98
TPLC100C16MP13C	XAF/XAUC60G	1.02	0.99	0.98
TPLC100C16MP13C	XAF/XAUD60G	1.01	0.98	0.97
TPLC100C16MP13C	XAFD48F	1.00	0.97	0.98
TPLC100C16MP13C	XAHC48F	1.00	0.97	0.98
TPLC100C16MP13C	XAHC60G	1.02	0.99	0.98
TPLC100C16MP13C	XAHD48F	1.00	0.97	0.98

Table 40: Cool multiplier furnace - 4 ton

Furnace model	Indoor coil model	Total capacity	Sensible capacity	kW
TPLC100C16MP13C	XAHD60G	1.02	0.99	0.98
TPLC100C20MP13C	CF/CM48C	0.99	0.94	0.95
TPLC100C20MP13C	CF/CM48D	0.99	0.94	0.93
TPLC100C20MP13C	CF/CM60C	1.00	0.95	0.94
TPLC100C20MP13C	CF/CM60D	1.01	0.97	0.95
TPLC100C20MP13C	XAF/XAUC48F	0.99	0.95	0.95
TPLC100C20MP13C	XAF/XAUC60G	1.02	0.96	0.96
TPLC100C20MP13C	XAF/XAUD60G	1.01	0.98	0.95
TPLC100C20MP13C	XAFD48F	0.98	0.93	0.94
TPLC100C20MP13C	XAHC48F	0.98	0.93	0.94
TPLC100C20MP13C	XAHC60G	1.02	0.96	0.96
TPLC100C20MP13C	XAHD48F	0.98	0.93	0.94
TPLC100C20MP13C	XAHD60G	1.01	0.95	0.95
TPLC120C20MP13C	CF/CM48C	0.99	0.94	0.95
TPLC120C20MP13C	CF/CM48D	0.99	0.94	0.93
TPLC120C20MP13C	CF/CM60C	1.00	0.95	0.94
TPLC120C20MP13C	CF/CM60D	1.01	0.97	0.95
TPLC120C20MP13C	XAF/XAUC48F	0.99	0.95	0.95
TPLC120C20MP13C	XAF/XAUC60G	1.02	0.96	0.96
TPLC120C20MP13C	XAF/XAUD60G	1.01	0.98	0.95
TPLC120C20MP13C	XAFD48F	0.98	0.93	0.94
TPLC120C20MP13C	XAHC48F	0.98	0.93	0.94
TPLC120C20MP13C	XAHC60G	1.02	0.96	0.96
TPLC120C20MP13C	XAHD48F	0.98	0.93	0.94
TPLC120C20MP13C	XAHD60G	1.01	0.95	0.95
CP9C080C16MP13C	CF/CM48C	1.00	0.98	1
CP9C080C16MP13C	CF/CM48D	0.98	0.95	0.96
CP9C080C16MP13C	CF/CM60C	1.01	0.98	1.01
CP9C080C16MP13C	CF/CM60D	0.99	0.95	0.95
CP9C080C16MP13C	XAF/XAUC48F	0.99	0.96	0.99
CP9C080C16MP13C	XAF/XAUC60G	1.01	0.98	1.01
CP9C080C16MP13C	XAF/XAUD60G	1.01	0.98	1.01
CP9C080C16MP13C	XAFD48F	0.99	0.96	0.99
CP9C080C16MP13C	XAHC48F	0.99	0.96	0.99
CP9C080C16MP13C	XAHC60G	1.02	0.99	0.98
CP9C080C16MP13C	XAHD48F	0.99	0.96	0.99
CP9C080C16MP13C	XAHD60G	1.01	0.98	1.01
CP9C100C16MP13C	CF/CM48C	0.99	0.96	0.95
CP9C100C16MP13C	CF/CM48D	0.99	0.95	0.95
CP9C100C16MP13C	CF/CM60C	1.00	0.96	0.96
CP9C100C16MP13C	CF/CM60D	1.00	0.95	0.94
CP9C100C16MP13C	XAF/XAUC48F	0.98	0.93	0.94
CP9C100C16MP13C	XAF/XAUC60G	1.02	0.98	0.96
CP9C100C16MP13C	XAF/XAUD60G	1.00	0.96	0.94
CP9C100C16MP13C	XAFD48F	0.98	0.93	0.94
CP9C100C16MP13C	XAHC48F	0.98	0.93	0.94
CP9C100C16MP13C	XAHC60G	1.02	0.97	0.96
CP9C100C16MP13C	XAHD48F	0.98	0.93	0.94
CP9C100C16MP13C	XAHD60G	1.01	0.96	0.95
CP9C100C20MP13C	CF/CM48C	0.99	0.96	0.95
CP9C100C20MP13C	CF/CM48D	0.99	0.95	0.95
CP9C100C20MP13C	CF/CM60C	1.00	0.96	0.96
CP9C100C20MP13C	CF/CM60D	1.00	0.96	0.96

Table 40: Cool multiplier furnace - 4 ton

Furnace model	Indoor coil model	Total capacity	Sensible capacity	kW
CP9C100C20MP13C	XAF/XAUC48F	0.98	0.93	0.94
CP9C100C20MP13C	XAF/XAUC60G	1.02	0.98	0.98
CP9C100C20MP13C	XAF/XAUD60G	1.00	0.96	0.96
CP9C100C20MP13C	XAFD48F	0.99	0.95	0.95
CP9C100C20MP13C	XAHC48F	0.98	0.94	0.96
CP9C100C20MP13C	XAHC60G	1.02	0.98	0.98
CP9C100C20MP13C	XAHD48F	0.98	0.94	0.96
CP9C100C20MP13C	XAHD60G	1.01	0.97	0.97
CP9C120D20MP13C	CF/CM48D	1.00	0.97	0.96
CP9C120D20MP13C	CF/CM60D	1.01	0.97	0.95
CP9C120D20MP13C	XAF/XAUD60G	1.02	0.98	0.96
CP9C120D20MP13C	XAFD48F	1.00	0.96	0.96
CP9C120D20MP13C	XAHD48F	1.00	0.96	0.96
CP9C120D20MP13C	XAHD60G	1.02	0.98	0.96
CPLC080C16MP13C	CF/CM48C	1.00	0.98	0.96
CPLC080C16MP13C	CF/CM48D	0.99	0.96	0.95
CPLC080C16MP13C	CF/CM60C	1.01	0.98	0.97
CPLC080C16MP13C	CF/CM60D	1.00	0.96	0.96
CPLC080C16MP13C	XAF/XAUC48F	1.00	0.97	0.98
CPLC080C16MP13C	XAF/XAUC60G	1.02	0.99	0.98
CPLC080C16MP13C	XAF/XAUD60G	1.01	0.98	0.97
CPLC080C16MP13C	XAFD48F	1.00	0.97	0.98
CPLC080C16MP13C	XAHC48F	1.00	0.97	0.98
CPLC080C16MP13C	XAHC60G	1.02	0.99	0.98
CPLC080C16MP13C	XAHD48F	1.00	0.97	0.98
CPLC080C16MP13C	XAHD60G	1.02	0.99	0.98
CPLC100C16MP13C	CF/CM48C	1.00	0.98	0.96
CPLC100C16MP13C	CF/CM48D	0.99	0.96	0.95
CPLC100C16MP13C	CF/CM60C	1.01	0.98	0.97
CPLC100C16MP13C	CF/CM60D	1.00	0.96	0.96
CPLC100C16MP13C	XAF/XAUC48F	1.00	0.97	0.98
CPLC100C16MP13C	XAF/XAUC60G	1.02	0.99	0.98
CPLC100C16MP13C	XAF/XAUD60G	1.01	0.98	0.97
CPLC100C16MP13C	XAFD48F	1.00	0.97	0.98
CPLC100C16MP13C	XAHC48F	1.00	0.97	0.98
CPLC100C16MP13C	XAHC60G	1.02	0.99	0.98
CPLC100C16MP13C	XAHD48F	1.00	0.97	0.98
CPLC100C16MP13C	XAHD60G	1.02	0.99	0.98
CPLC100C20MP13C	CF/CM48C	0.99	0.94	0.95
CPLC100C20MP13C	CF/CM48D	0.99	0.94	0.93
CPLC100C20MP13C	CF/CM60C	1.00	0.95	0.94
CPLC100C20MP13C	CF/CM60D	1.01	0.97	0.95
CPLC100C20MP13C	XAF/XAUC48F	0.99	0.95	0.95
CPLC100C20MP13C	XAF/XAUC60G	1.02	0.96	0.96
CPLC100C20MP13C	XAF/XAUD60G	1.01	0.98	0.95
CPLC100C20MP13C	XAFD48F	0.98	0.93	0.94
CPLC100C20MP13C	XAHC48F	0.98	0.93	0.94
CPLC100C20MP13C	XAHC60G	1.02	0.96	0.96
CPLC100C20MP13C	XAHD48F	0.98	0.93	0.94
CPLC100C20MP13C	XAHD60G	1.01	0.95	0.95
CPLC120C20MP13C	CF/CM48C	0.99	0.94	0.95
CPLC120C20MP13C	CF/CM48D	0.99	0.94	0.93
CPLC120C20MP13C	CF/CM60C	1.00	0.95	0.94

Table 40: Cool multiplier furnace - 4 ton

Furnace model	Indoor coil model	Total capacity	Sensible capacity	kW
CPLC120C20MP13C	CF/CM60D	1.01	0.97	0.95
CPLC120C20MP13C	XAF/XAUC48F	0.99	0.95	0.95
CPLC120C20MP13C	XAF/XAUC60G	1.02	0.96	0.96
CPLC120C20MP13C	XAF/XAUD60G	1.01	0.98	0.95
CPLC120C20MP13C	XAFD48F	0.98	0.93	0.94
CPLC120C20MP13C	XAHC48F	0.98	0.93	0.94
CPLC120C20MP13C	XAHC60G	1.02	0.96	0.96
CPLC120C20MP13C	XAHD48F	0.98	0.93	0.94
CPLC120C20MP13C	XAHD60G	1.01	0.95	0.95

Performance data - 5 ton

See the following tables for performance and multiplier data for the TCE2B60S21S unit.

Condenser only performance data - 5 ton

Table 41: TCE2B60S21S Condenser Table

Saturated suction at compressor		Outdoor ambient temperature															
Temperature	Pressure	55 °F		65 °F		75 °F		85 °F		95 °F		105 °F		115 °F		125 °F	
(°F)	(psig)	MBH	kW	MBH	kW	MBH	kW	MBH	kW	MBH	kW	MBH	kW	MBH	kW	MBH	kW
35	107	59.0	2.35	56.1	2.76	53.1	3.15	49.9	3.53	46.5	3.94	42.9	4.40	39.1	4.93	35.1	5.58
40	118	64.9	2.36	61.7	2.77	58.3	3.16	54.8	3.55	51.2	3.97	47.4	4.43	43.4	4.96	39.2	5.61
45	130	71.2	2.36	67.6	2.78	64.0	3.17	60.2	3.57	56.3	3.99	52.2	4.46	48.0	5.00	43.5	5.64
50	142	77.8	2.36	73.9	2.78	69.9	3.18	65.8	3.59	61.6	4.02	57.3	4.49	52.8	5.04	48.1	5.68
55	156	84.8	2.36	80.6	2.78	76.3	3.19	71.8	3.60	67.3	4.04	62.7	4.52	57.9	5.08	52.9	5.74

Condenser only performance data notes

- For outdoor unit (condenser) performance only. Data does not include the effects of air handler power or heat.
- Performance based on 15°F subcooling and 15°F superheat at the outdoor unit base valves:
  a. Increase capacity by 1% for each 2°F increase in subcooling.
  b. Decrease capacity by 1% for each 2°F decrease in subcooling.
- Maximum recommended condensing temperature is 140°F.

Cooling performance data - 5 ton

Table 42: Cooling performance data - TCE2B60S21S with indoor coil XAFC60GXXN1

Air temperature entering outdoor unit (°F)	ID CFM	1525					1725					1925				
	ID DB (°F)	80	80	75	80	80	80	80	75	80	80	80	80	75	80	80
	ID WB (°F)	57	62	62	67	72	57	62	62	67	72	57	62	62	67	72
55	T.C.	51.1	54.3	52.8	56.1	56.7	53.2	51.5	55.0	57.5	59.3	51.8	55.4	53.2	58.3	60.7
	S.C.	49.2	41.9	35.8	34.6	27.9	36.4	50.1	43.0	36.1	29.8	50.7	43.8	36.7	37.4	31.5
	kW	3.08	3.09	3.10	3.10	3.12	3.20	3.18	3.19	3.21	3.23	3.27	3.29	3.31	3.32	3.38
65	T.C.	50.1	54.2	53.1	58.1	62.0	54.1	51.2	55.5	59.2	63.1	52.3	56.3	54.9	60.2	63.9
	S.C.	48.4	42.6	36.6	36.7	30.7	37.6	50.5	44.3	37.8	31.4	52.3	45.7	38.5	38.8	31.8
	kW	3.48	3.50	3.51	3.51	3.52	3.60	3.57	3.59	3.60	3.61	3.66	3.68	3.69	3.69	3.70
75	T.C.	49.6	54.2	53.5	58.6	63.2	54.5	51.1	55.4	59.7	64.3	52.4	56.2	55.3	60.6	65.2
	S.C.	49.3	43.7	37.5	37.6	31.5	38.8	51.1	45.7	39.0	32.2	52.4	47.3	39.9	40.1	32.8
	kW	3.84	3.85	3.86	3.86	3.87	3.95	3.93	3.94	3.95	3.96	4.02	4.03	4.04	4.04	4.05
85	T.C.	48.9	53.1	52.7	57.8	62.9	53.7	50.5	54.0	58.8	63.9	51.9	54.9	54.4	59.7	64.7
	S.C.	48.9	43.9	37.6	37.7	31.3	39.0	50.5	45.8	39.1	32.1	51.9	47.8	40.3	40.4	32.9
	kW	4.21	4.22	4.23	4.23	4.24	4.32	4.30	4.31	4.32	4.33	4.39	4.40	4.41	4.41	4.42
95	T.C.	47.4	51.0	50.7	55.7	60.9	51.6	49.0	52.0	56.7	61.7	50.3	52.6	52.4	57.5	62.4
	S.C.	47.4	43.2	36.7	36.9	30.3	38.2	49.0	45.3	38.3	31.2	50.3	47.2	39.6	39.7	32.0
	kW	4.67	4.69	4.69	4.71	4.72	4.78	4.77	4.78	4.79	4.81	4.86	4.87	4.87	4.88	4.90
105	T.C.	45.9	48.8	48.6	53.4	58.5	49.4	47.4	49.6	54.3	59.3	48.6	50.2	50.1	55.1	59.9
	S.C.	45.9	42.3	35.9	36.0	29.6	37.4	47.4	44.4	37.6	30.5	48.6	46.5	38.8	38.9	31.2
	kW	5.20	5.20	5.22	5.23	5.24	5.30	5.28	5.29	5.32	5.34	5.37	5.38	5.39	5.41	5.43
115	T.C.	44.1	46.3	46.1	50.9	55.8	46.9	45.5	47.0	51.7	56.5	46.7	47.5	47.5	52.4	57.1
	S.C.	44.1	41.3	34.9	35.1	28.7	36.5	45.5	43.6	36.7	29.6	46.7	45.5	37.8	38.1	30.4
	kW	5.88	5.89	5.91	5.91	5.90	5.99	5.96	5.96	5.99	5.99	6.05	6.05	6.08	6.07	6.07

Table 42: Cooling performance data - TCE2B60S21S with indoor coil XAFC60GXXN1

Air temperature entering outdoor unit (°F)	ID CFM	1525					1725					1925				
	ID DB (°F)	80	80	75	80	80	80	80	75	80	80	80	80	75	80	80
	ID WB (°F)	57	62	62	67	72	57	62	62	67	72	57	62	62	67	72
125	T.C.	41.0	43.0	43.0	47.8	51.7	43.7	42.7	43.7	48.8	53.7	43.4	44.1	44.0	49.6	55.3
	S.C.	41.0	39.8	33.1	33.9	27.6	35.0	42.6	42.5	35.7	29.2	43.4	44.1	36.8	37.3	30.5
	kW	6.88	6.80	6.86	6.76	6.74	6.86	6.87	6.80	6.81	6.79	6.98	6.90	6.92	6.88	6.87

Cooling performance data notes

- All capacities include indoor fan heat. kW values are for the system (outdoor + indoor).
- Green shaded cells are ACCA (TVA) conditions.
- Blue shaded cells are AHRI conditions.

Multipliers for determining the performance with other indoor sections

Note: For dry bulb temperatures different than those listed (between 73°F to 87°F), sensible capacity increases by 1060 BTUH per 1000 CFM per degree above the listed temperature and decreases by 1060 BTUH per 1000 CFM per degree below the listed temperature.

Cool multiplier airhandler - 5 ton

Table 43: Cool multiplier air handler - 5 ton

Air handler model	Indoor coil model	Total capacity	Sensible capacity	kW
—	CF/CM60C	1.00	1	1
—	CF/CM60D	1.00	1	1
—	CF/CM64D	1.00	1.01	0.98
—	XAF/XAUC60G	1.00	0	1
—	XAF/XAUD60G	1.00	1	1
—	XAF/XAUD60H	1.00	1.01	1
—	XAFC60H	1.00	1.01	1
—	XAHC60G	1.00	1	1
—	XAHC60H	1.00	1.01	1
—	XAHD60G	1.00	0.99	1
—	XAHD60H	1.00	1.01	1
AE60CX22	—	1.00	1	0.98
AE60DX21	—	1.02	1	0.95
AVC60DX21	—	1.01	0.97	0.95
JHETC60HXXS2N1	—	1.01	0.99	0.93
JHETD60HXXS2N1	—	1.01	0.99	0.93
JHVTC60HXXC2N1	—	1.01	0.97	0.95
JHVTD60HXXC2N1	—	1.02	1	0.93
JMET16CS2N1A	XAF/XAUC60G	1.01	0.97	0.95
JMET16CS2N1A	XAFC60H	1.01	0.99	0.95
JMET16CS2N1A	XAHC60G	1.01	0.97	0.95
JMET16CS2N1A	XAHC60H	1.01	0.99	0.95
JMET18DS2N1A	XAF/XAUD60G	1.01	0.97	0.93
JMET18DS2N1A	XAF/XAUD60H	1.01	0.99	0.93
JMET18DS2N1A	XAHD60G	1.00	0.96	0.94
JMET18DS2N1A	XAHD60H	1.01	0.99	0.93
JMVT16CC2N1A	XAF/XAUC60G	1.01	0.97	0.95

Table 43: Cool multiplier air handler - 5 ton

Air handler model	Indoor coil model	Total capacity	Sensible capacity	kW
JMVT16CC2N1A	XAFC60H	1.02	1	0.95
JMVT16CC2N1A	XAHC60G	1.01	0.97	0.95
JMVT16CC2N1A	XAHC60H	1.02	1	0.93
JMVT17CC2N1A	XAF/XAUC60G	1.01	0.97	0.95
JMVT17CC2N1A	XAFC60H	1.02	1	0.95
JMVT17CC2N1A	XAHC60G	1.01	0.97	0.95
JMVT17CC2N1A	XAHC60H	1.02	1	0.93
ME20DN21	CF/CM60D	1.00	0.96	0.94
ME20DN21	CF/CM64D	1.01	0.97	0.93
MVC14DN21	CF/CM60D	1.00	0.96	0.94
MVC14DN21	CF/CM64D	1.02	0.99	0.93
MVC16CN21	CF/CM60C	1.01	1	0.97
MVC20DN21	CF/CM60D	1.01	0.97	0.95
MVC20DN21	CF/CM64D	1.02	0.99	0.93

Cool multiplier furnace - 5 ton

Table 44: Cool multiplier furnace - 5 ton

Furnace model	Indoor coil model	Total capacity	Sensible capacity	kW
TL8E100C20UH11	CF/CM60D	0.98	0.95	0.94
TM8E080C20MP11	CF/CM60C	1.00	0.99	0.98
TM8E080C20MP11	CF/CM60D	0.99	0.97	0.97
TM8E080C20MP11	CF/CM64D	1.01	1	0.97
TM8E080C20MP11	XAF/XAUC60G	1.00	0.99	0.98
TM8E080C20MP11	XAF/XAUD60G	0.99	0.97	0.97
TM8E080C20MP11	XAF/XAUD60H	1.00	0.99	0.98
TM8E080C20MP11	XAFC60H	1.01	1	0.99
TM8E080C20MP11	XAHC60G	1.00	0.99	0.98
TM8E080C20MP11	XAHC60H	1.01	1	0.99
TM8E080C20MP11	XAHD60G	1.00	0.97	0.98
TM8E080C20MP11	XAHD60H	1.00	0.99	0.98
TM8E100C20MP11	CF/CM60C	1.01	1.01	0.99
TM8E100C20MP11	CF/CM60D	0.99	0.97	0.97
TM8E100C20MP11	CF/CM64D	1.01	1	0.97
TM8E100C20MP11	XAF/XAUC60G	1.01	1	0.99
TM8E100C20MP11	XAF/XAUD60G	0.99	0.97	0.97
TM8E100C20MP11	XAF/XAUD60H	1.00	0.99	0.98
TM8E100C20MP11	XAFC60H	1.01	1	0.99
TM8E100C20MP11	XAHC60G	1.01	1	0.99
TM8E100C20MP11	XAHC60H	1.01	1	0.99
TM8E100C20MP11	XAHD60G	1.00	0.99	0.98
TM8E100C20MP11	XAHD60H	1.00	0.99	0.98
TM8E120C20MP11	CF/CM60C	1.00	0.99	0.98
TM8E120C20MP11	CF/CM60D	0.99	0.97	0.97
TM8E120C20MP11	CF/CM64D	1.01	1	0.97
TM8E120C20MP11	XAF/XAUC60G	1.00	0.99	0.98
TM8E120C20MP11	XAF/XAUD60G	0.99	0.97	0.97
TM8E120C20MP11	XAF/XAUD60H	1.00	0.99	0.98
TM8E120C20MP11	XAFC60H	1.01	1	0.99
TM8E120C20MP11	XAHC60G	1.00	0.99	0.98
TM8E120C20MP11	XAHC60H	1.01	1	0.99
TM8E120C20MP11	XAHD60G	1.00	0.99	0.98
TM8E120C20MP11	XAHD60H	1.00	0.99	0.98

Table 44: Cool multiplier furnace - 5 ton

Furnace model	Indoor coil model	Total capacity	Sensible capacity	kW
TM8E130D20MP11	CF/CM60D	0.99	0.96	0.95
TM8E130D20MP11	CF/CM64D	1.02	1.03	0.97
TM8E130D20MP11	XAF/XAUD60G	1.02	1.03	1
TM8E130D20MP11	XAF/XAUD60H	1.02	1.04	0.97
TM8E130D20MP11	XAHD60G	1.02	1.01	0.97
TM8E130D20MP11	XAHD60H	1.02	1.03	0.97
TM8V100C20MP12C	CF/CM60C	0.98	0.95	0.96
TM8V100C20MP12C	CF/CM60D	0.98	0.95	0.94
TM8V100C20MP12C	CF/CM64D	1.00	0.97	0.96
TM8V100C20MP12C	XAF/XAUC60G	0.99	0.96	0.97
TM8V100C20MP12C	XAF/XAUD60G	0.98	0.95	0.94
TM8V100C20MP12C	XAF/XAUD60H	0.99	0.96	0.95
TM8V100C20MP12C	XAFC60H	1.00	0.97	0.96
TM8V100C20MP12C	XAHC60G	0.99	0.96	0.95
TM8V100C20MP12C	XAHC60H	1.00	0.97	0.96
TM8V100C20MP12C	XAHD60G	0.99	0.96	0.97
TM8V100C20MP12C	XAHD60H	0.99	0.96	0.95
TM8V120C20MP12C	CF/CM60C	0.98	0.95	0.96
TM8V120C20MP12C	CF/CM60D	0.98	0.95	0.94
TM8V120C20MP12C	CF/CM64D	1.00	0.97	0.96
TM8V120C20MP12C	XAF/XAUC60G	0.99	0.96	0.97
TM8V120C20MP12C	XAF/XAUD60G	0.98	0.95	0.94
TM8V120C20MP12C	XAF/XAUD60H	0.99	0.96	0.95
TM8V120C20MP12C	XAFC60H	1.00	0.97	0.96
TM8V120C20MP12C	XAHC60G	0.99	0.96	0.95
TM8V120C20MP12C	XAHC60H	1.00	0.97	0.96
TM8V120C20MP12C	XAHD60G	0.99	0.96	0.97
TM8V120C20MP12C	XAHD60H	0.99	0.96	0.95
TM8Y100C20MP11	CF/CM60C	1.00	1	1
TM8Y100C20MP11	CF/CM60D	1.00	1.01	0.98
TM8Y100C20MP11	CF/CM64D	1.02	1.03	1
TM8Y100C20MP11	XAF/XAUC60G	1.01	1.01	1.01
TM8Y100C20MP11	XAF/XAUD60G	1.00	1	1
TM8Y100C20MP11	XAFC60H	1.02	1.03	1.02
TM8Y100C20MP11	XAHC60G	1.01	1.01	1.01
TM8Y100C20MP11	XAHC60H	1.02	1.03	1.02
TM8Y100C20MP11	XAHD60G	1.00	1	1
TM8Y120C20MP11	CF/CM60C	1.00	1	1
TM8Y120C20MP11	CF/CM60D	1.00	1.01	0.98
TM8Y120C20MP11	CF/CM64D	1.02	1.03	1
TM8Y120C20MP11	XAF/XAUC60G	1.01	1.01	1.01
TM8Y120C20MP11	XAF/XAUD60G	1.00	1	1
TM8Y120C20MP11	XAFC60H	1.02	1.03	1.02
TM8Y120C20MP11	XAHC60G	1.01	1.01	1.01
TM8Y120C20MP11	XAHC60H	1.02	1.03	1.02
TM8Y120C20MP11	XAHD60G	1.00	1	1
TM9E080C20MP12	CF/CM60C	1.01	1.01	0.99
TM9E080C20MP12	CF/CM60D	0.99	0.97	0.97
TM9E080C20MP12	CF/CM64D	1.02	1.03	0.97
TM9E080C20MP12	XAF/XAUC60G	1.02	1.01	1
TM9E080C20MP12	XAF/XAUD60G	1.01	1.01	0.99
TM9E080C20MP12	XAF/XAUD60H	1.01	1.01	0.99
TM9E080C20MP12	XAFC60H	1.02	1.03	1

Table 44: Cool multiplier furnace - 5 ton

Furnace model	Indoor coil model	Total capacity	Sensible capacity	kW
TM9E080C20MP12	XAHC60G	1.02	1.01	1
TM9E080C20MP12	XAHC60H	1.02	1.03	1
TM9E080C20MP12	XAHD60G	1.01	1	0.97
TM9E080C20MP12	XAHD60H	1.01	1.01	0.97
TM9E100C16MP12	CF/CM60D	0.97	0.94	0.97
TM9E100C20MP12	CF/CM60C	1.01	1	0.99
TM9E100C20MP12	CF/CM60D	0.99	0.97	0.97
TM9E100C20MP12	CF/CM64D	1.01	0.99	0.97
TM9E100C20MP12	XAF/XAUC60G	1.01	1	0.99
TM9E100C20MP12	XAF/XAUD60G	0.99	0.97	0.97
TM9E100C20MP12	XAF/XAUD60H	1.01	1.01	0.99
TM9E100C20MP12	XAFC60H	1.01	1	0.99
TM9E100C20MP12	XAHC60G	1.01	1	0.99
TM9E100C20MP12	XAHC60H	1.01	1	0.99
TM9E100C20MP12	XAHD60G	1.01	1	0.97
TM9E100C20MP12	XAHD60H	1.01	1.01	0.97
TM9E120D20MP12	CF/CM60D	0.99	0.96	0.95
TM9E120D20MP12	CF/CM64D	1.01	1	0.97
TM9E120D20MP12	XAF/XAUD60G	1.00	0.99	0.98
TM9E120D20MP12	XAF/XAUD60H	1.01	1	0.99
TM9E120D20MP12	XAHD60G	1.00	0.97	1
TM9E120D20MP12	XAHD60H	1.01	1	1.01
TM9V100C16MP12C	CF/CM60C	0.98	0.95	0.96
TM9V100C16MP12C	CF/CM60D	0.99	0.99	0.99
TM9V100C16MP12C	CF/CM64D	1.00	0.97	0.96
TM9V100C16MP12C	XAF/XAUC60G	0.99	0.96	0.97
TM9V100C16MP12C	XAF/XAUD60G	0.98	0.95	0.96
TM9V100C16MP12C	XAF/XAUD60H	0.99	0.97	0.97
TM9V100C16MP12C	XAFC60H	1.00	0.97	0.98
TM9V100C16MP12C	XAHC60G	0.99	0.96	0.97
TM9V100C16MP12C	XAHC60H	1.00	0.97	0.98
TM9V100C16MP12C	XAHD60G	0.99	0.96	0.97
TM9V100C16MP12C	XAHD60H	0.99	0.97	0.97
TM9V100C20MP12C	CF/CM60C	0.99	0.97	0.99
TM9V100C20MP12C	CF/CM60D	0.98	0.96	0.96
TM9V100C20MP12C	CF/CM64D	1.00	0.99	0.98
TM9V100C20MP12C	XAF/XAUC60G	0.99	0.97	0.99
TM9V100C20MP12C	XAF/XAUD60G	0.98	0.96	0.98
TM9V100C20MP12C	XAF/XAUD60H	0.99	0.99	0.99
TM9V100C20MP12C	XAFC60H	1.00	0.99	1
TM9V100C20MP12C	XAHC60G	0.99	0.97	0.99
TM9V100C20MP12C	XAHC60H	1.00	0.99	1
TM9V100C20MP12C	XAHD60H	0.99	0.99	0.99
TM9V120D20MP12C	CF/CM60D	1.00	0.97	0.96
TM9V120D20MP12C	CF/CM64D	1.01	1	0.95
TM9V120D20MP12C	XAF/XAUD60G	1.01	0.99	0.97
TM9V120D20MP12C	XAF/XAUD60H	1.01	1	0.97
TM9V120D20MP12C	XAHD60G	1.01	1	0.97
TM9V120D20MP12C	XAHD60H	1.01	1	0.97
TM9Y100C20MP11	CF/CM60C	0.98	0.96	0.98
TM9Y100C20MP11	CF/CM60D	0.98	0.97	0.98
TM9Y100C20MP11	CF/CM64D	1.00	0.99	1
TM9Y100C20MP11	XAF/XAUC60G	0.99	0.97	0.99

Table 44: Cool multiplier furnace - 5 ton

Furnace model	Indoor coil model	Total capacity	Sensible capacity	kW
TM9Y100C20MP11	XAF/XAUD60G	0.98	0.96	0.98
TM9Y100C20MP11	XAF/XAUD60H	0.99	0.97	0.99
TM9Y100C20MP11	XAFC60H	1.00	0.99	1
TM9Y100C20MP11	XAHC60G	0.99	0.97	0.99
TM9Y100C20MP11	XAHC60H	1.00	0.99	1
TM9Y100C20MP11	XAHD60G	0.98	0.95	0.98
TM9Y100C20MP11	XAHD60H	0.98	0.97	0.98
TM9Y120D20MP11	CF/CM60D	1.01	1.01	1.01
TM9Y120D20MP11	CF/CM64D	1.02	1.03	1.02
TM9Y120D20MP11	XAF/XAUD60G	1.00	1	1
TM9Y120D20MP11	XAF/XAUD60H	1.00	1	1
TM9Y120D20MP11	XAHD60G	1.00	0.99	1
TM9Y120D20MP11	XAHD60H	1.00	1	1
TMLE080C20MP11	CF/CM60C	1.00	0.99	0.98
TMLE080C20MP11	CF/CM60D	0.99	0.97	0.97
TMLE080C20MP11	CF/CM64D	1.01	1	0.97
TMLE080C20MP11	XAF/XAUC60G	1.00	0.99	0.98
TMLE080C20MP11	XAF/XAUD60G	0.99	0.97	0.97
TMLE080C20MP11	XAF/XAUD60H	1.00	0.99	0.98
TMLE080C20MP11	XAFC60H	1.01	1	0.99
TMLE080C20MP11	XAHC60G	1.00	0.99	0.98
TMLE080C20MP11	XAHC60H	1.01	1	0.99
TMLE080C20MP11	XAHD60G	1.00	0.97	0.98
TMLE080C20MP11	XAHD60H	1.00	0.99	0.98
TMLE100C20MP11	CF/CM60C	1.01	1.01	0.99
TMLE100C20MP11	CF/CM60D	0.99	0.97	0.97
TMLE100C20MP11	CF/CM64D	1.01	1	0.97
TMLE100C20MP11	XAF/XAUC60G	1.01	1	0.99
TMLE100C20MP11	XAF/XAUD60G	0.99	0.97	0.97
TMLE100C20MP11	XAF/XAUD60H	1.00	0.99	0.98
TMLE100C20MP11	XAFC60H	1.01	1	0.99
TMLE100C20MP11	XAHC60G	1.01	1	0.99
TMLE100C20MP11	XAHC60H	1.01	1	0.99
TMLE100C20MP11	XAHD60G	1.00	0.99	0.98
TMLE100C20MP11	XAHD60H	1.00	0.99	0.98
TMLE120C20MP11	CF/CM60C	1.00	0.99	0.98
TMLE120C20MP11	CF/CM60D	0.99	0.97	0.97
TMLE120C20MP11	CF/CM64D	1.01	1	0.97
TMLE120C20MP11	XAF/XAUC60G	1.00	0.99	0.98
TMLE120C20MP11	XAF/XAUD60G	0.99	0.97	0.97
TMLE120C20MP11	XAF/XAUD60H	1.00	0.99	0.98
TMLE120C20MP11	XAFC60H	1.01	1	0.99
TMLE120C20MP11	XAHC60G	1.00	0.99	0.98
TMLE120C20MP11	XAHC60H	1.01	1	0.99
TMLE120C20MP11	XAHD60G	1.00	0.99	0.98
TMLE120C20MP11	XAHD60H	1.00	0.99	0.98
TMLE130D20MP11	CF/CM60D	0.99	0.96	0.95
TMLE130D20MP11	CF/CM64D	1.02	1.03	0.97
TMLE130D20MP11	XAF/XAUD60G	1.02	1.03	1
TMLE130D20MP11	XAF/XAUD60H	1.02	1.04	0.97
TMLE130D20MP11	XAHD60G	1.02	1.01	0.97
TMLE130D20MP11	XAHD60H	1.02	1.03	0.97
TMLV120C20MP12C	CF/CM60C	0.98	0.95	0.96

Table 44: Cool multiplier furnace - 5 ton

Furnace model	Indoor coil model	Total capacity	Sensible capacity	kW
TMLV120C20MP12C	CF/CM60D	0.98	0.95	0.94
TMLV120C20MP12C	CF/CM64D	1.00	0.97	0.96
TMLV120C20MP12C	XAF/XAUC60G	0.99	0.96	0.97
TMLV120C20MP12C	XAF/XAUD60G	0.98	0.95	0.94
TMLV120C20MP12C	XAF/XAUD60H	0.99	0.96	0.95
TMLV120C20MP12C	XAFC60H	1.00	0.97	0.96
TMLV120C20MP12C	XAHC60G	0.99	0.96	0.95
TMLV120C20MP12C	XAHC60H	1.00	0.97	0.96
TMLV120C20MP12C	XAHD60G	0.99	0.96	0.97
TMLV120C20MP12C	XAHD60H	0.99	0.96	0.95
TP9C100C16MP13C	CF/CM60C	0.98	0.95	0.96
TP9C100C16MP13C	CF/CM60D	0.99	0.99	0.99
TP9C100C16MP13C	CF/CM64D	1.00	0.97	0.96
TP9C100C16MP13C	XAF/XAUC60G	0.99	0.96	0.97
TP9C100C16MP13C	XAF/XAUD60G	0.98	0.95	0.96
TP9C100C16MP13C	XAF/XAUD60H	0.99	0.97	0.97
TP9C100C16MP13C	XAFC60H	1.00	0.97	0.98
TP9C100C16MP13C	XAHC60G	0.99	0.96	0.97
TP9C100C16MP13C	XAHC60H	1.00	0.97	0.98
TP9C100C16MP13C	XAHD60G	0.99	0.96	0.97
TP9C100C16MP13C	XAHD60H	0.99	0.97	0.97
TP9C100C20MP13C	CF/CM60C	0.99	0.97	0.99
TP9C100C20MP13C	CF/CM60D	0.98	0.96	0.96
TP9C100C20MP13C	CF/CM64D	1.00	0.99	0.98
TP9C100C20MP13C	XAF/XAUC60G	0.99	0.97	0.99
TP9C100C20MP13C	XAF/XAUD60G	0.98	0.96	0.98
TP9C100C20MP13C	XAF/XAUD60H	0.99	0.99	0.99
TP9C100C20MP13C	XAFC60H	1.00	0.99	1
TP9C100C20MP13C	XAHC60G	0.99	0.97	0.99
TP9C100C20MP13C	XAHC60H	1.00	0.99	1
TP9C100C20MP13C	XAHD60H	0.99	0.99	0.99
TP9C120D20MP13C	CF/CM60D	1.00	0.97	0.96
TP9C120D20MP13C	CF/CM64D	1.01	1	0.95
TP9C120D20MP13C	XAF/XAUD60G	1.01	0.99	0.97
TP9C120D20MP13C	XAF/XAUD60H	1.01	1	0.97
TP9C120D20MP13C	XAHD60G	1.01	1	0.97
TP9C120D20MP13C	XAHD60H	1.01	1	0.97
TPLC100C20MP13C	CF/CM60C	0.98	0.95	0.96
TPLC100C20MP13C	CF/CM60D	0.98	0.95	0.94
TPLC100C20MP13C	CF/CM64D	1.00	0.97	0.96
TPLC100C20MP13C	XAF/XAUC60G	0.99	0.96	0.97
TPLC100C20MP13C	XAF/XAUD60G	0.98	0.95	0.94
TPLC100C20MP13C	XAF/XAUD60H	0.99	0.96	0.95
TPLC100C20MP13C	XAFC60H	1.00	0.97	0.96
TPLC100C20MP13C	XAHC60G	0.99	0.96	0.95
TPLC100C20MP13C	XAHC60H	1.00	0.97	0.96
TPLC100C20MP13C	XAHD60G	0.99	0.96	0.97
TPLC100C20MP13C	XAHD60H	0.99	0.96	0.95
TPLC120C20MP13C	CF/CM60C	0.98	0.95	0.96
TPLC120C20MP13C	CF/CM60D	0.98	0.95	0.94
TPLC120C20MP13C	CF/CM64D	1.00	0.97	0.96
TPLC120C20MP13C	XAF/XAUC60G	0.99	0.96	0.97
TPLC120C20MP13C	XAF/XAUD60G	0.98	0.95	0.94

Table 44: Cool multiplier furnace - 5 ton

Furnace model	Indoor coil model	Total capacity	Sensible capacity	kW
TPLC120C20MP13C	XAF/XAUD60H	0.99	0.96	0.95
TPLC120C20MP13C	XAFC60H	1.00	0.97	0.96
TPLC120C20MP13C	XAHC60G	0.99	0.96	0.95
TPLC120C20MP13C	XAHC60H	1.00	0.97	0.96
TPLC120C20MP13C	XAHD60G	0.99	0.96	0.97
TPLC120C20MP13C	XAHD60H	0.99	0.96	0.95
CP9C100C16MP13C	CF/CM60C	0.98	0.95	0.96
CP9C100C16MP13C	CF/CM60D	0.99	0.99	0.99
CP9C100C16MP13C	CF/CM64D	1.00	0.97	0.96
CP9C100C16MP13C	XAF/XAUC60G	0.99	0.96	0.97
CP9C100C16MP13C	XAF/XAUD60G	0.98	0.95	0.96
CP9C100C16MP13C	XAF/XAUD60H	0.99	0.97	0.97
CP9C100C16MP13C	XAFC60H	1.00	0.97	0.98
CP9C100C16MP13C	XAHC60G	0.99	0.96	0.97
CP9C100C16MP13C	XAHC60H	1.00	0.97	0.98
CP9C100C16MP13C	XAHD60G	0.99	0.96	0.97
CP9C100C16MP13C	XAHD60H	0.99	0.97	0.97
CP9C100C20MP13C	CF/CM60C	0.99	0.97	0.99
CP9C100C20MP13C	CF/CM60D	0.98	0.96	0.96
CP9C100C20MP13C	CF/CM64D	1.00	0.99	0.98
CP9C100C20MP13C	XAF/XAUC60G	0.99	0.97	0.99
CP9C100C20MP13C	XAF/XAUD60G	0.98	0.96	0.98
CP9C100C20MP13C	XAF/XAUD60H	0.99	0.99	0.99
CP9C100C20MP13C	XAFC60H	1.00	0.99	1
CP9C100C20MP13C	XAHC60G	0.99	0.97	0.99
CP9C100C20MP13C	XAHC60H	1.00	0.99	1
CP9C100C20MP13C	XAHD60H	0.99	0.99	0.99
CP9C120D20MP13C	CF/CM60D	1.00	0.97	0.96
CP9C120D20MP13C	CF/CM64D	1.01	1	0.95
CP9C120D20MP13C	XAF/XAUD60G	1.01	0.99	0.97
CP9C120D20MP13C	XAF/XAUD60H	1.01	1	0.97
CP9C120D20MP13C	XAHD60G	1.01	1	0.97
CP9C120D20MP13C	XAHD60H	1.01	1	0.97
CPLC100C20MP13C	CF/CM60C	0.98	0.95	0.96
CPLC100C20MP13C	CF/CM60D	0.98	0.95	0.94
CPLC100C20MP13C	CF/CM64D	1.00	0.97	0.96
CPLC100C20MP13C	XAF/XAUC60G	0.99	0.96	0.97
CPLC100C20MP13C	XAF/XAUD60G	0.98	0.95	0.94
CPLC100C20MP13C	XAF/XAUD60H	0.99	0.96	0.95
CPLC100C20MP13C	XAFC60H	1.00	0.97	0.96
CPLC100C20MP13C	XAHC60G	0.99	0.96	0.95
CPLC100C20MP13C	XAHC60H	1.00	0.97	0.96
CPLC100C20MP13C	XAHD60G	0.99	0.96	0.97
CPLC100C20MP13C	XAHD60H	0.99	0.96	0.95
CPLC120C20MP13C	CF/CM60C	0.98	0.95	0.96
CPLC120C20MP13C	CF/CM60D	0.98	0.95	0.94
CPLC120C20MP13C	CF/CM64D	1.00	0.97	0.96
CPLC120C20MP13C	XAF/XAUC60G	0.99	0.96	0.97
CPLC120C20MP13C	XAF/XAUD60G	0.98	0.95	0.94
CPLC120C20MP13C	XAF/XAUD60H	0.99	0.96	0.95
CPLC120C20MP13C	XAFC60H	1.00	0.97	0.96
CPLC120C20MP13C	XAHC60G	0.99	0.96	0.95
CPLC120C20MP13C	XAHC60H	1.00	0.97	0.96

Table 44: Cool multiplier furnace - 5 ton

Furnace model	Indoor coil model	Total capacity	Sensible capacity	kW
CPLC120C20MP13C	XAHD60G	0.99	0.96	0.97
CPLC120C20MP13C	XAHD60H	0.99	0.96	0.95

Subject to change without notice. Published in U.S.A. Copyright © 2023 by Johnson Controls. All rights reserved.