INSTALLATION MANUAL

R-454B
KE SERIES

3 ton to 6 ton

60 Hz

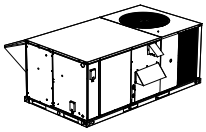

Table of contents

General . . . 2
GoTemp Pro . . . 2
Installation . . . 5
  Installation safety information . . . 5
  Limitations . . . 5
  Location . . . 7
  Rigging and handling . . . 7
  Ductwork . . . 12
  Condensate drain . . . 12
  Compressors . . . 12
  Filters . . . 13
  Power and control wiring . . . 13
Typical field power and control wiring . . . 15
  Typical power wiring . . . 15
  Field installed electric heat . . . 35
  Options/accessories . . . 38
  RRS economizer interface overview . . . 38
  Smart Equipment Economizer sequences . . . 39
  Dry bulb changeover . . . 39
  Single enthalpy changeover . . . 39
  Dual enthalpy changeover . . . 39
  Auto . . . 39
  Free cooling operation . . . 39
  Power exhaust . . . 40
  Operation . . . 40
  Checking supply air CFM . . . 53
Operation . . . 54
  Cooling sequence of operation . . . 54
  Field installed electric heating sequence of operations . . . 56
  Gas heating sequence of operations . . . 57
  Gas heat operation errors . . . 57
  Flash codes or error messages . . . 58
  Resets . . . 58
Start-up (cooling) . . . 59
Start-up (gas heat) . . . 59
Checking gas input . . . 61
Start up for units equipped for FER . . . 61
  Direct drive . . . 61
  Belt drive . . . 61
Smart Equipment Control Board navigation components . . . 68
Start-Up Sheet . . . 77

List of tables

KE036-072 unit limitations . . . 6
KE036-072 . . . 8
KE036-072 unit accessory weights . . . 8
KE036-072 unit clearances . . . 10
KE036-072 utilities entry . . . 11
Control wire sizes . . . 14
Electrical data . . . 16
Electrical data: single-phase gas heat, belt drive . . . 32
KE036-072 Physical data . . . 33
Electric heat minimum supply air . . . 35
Gas heat application data . . . 35
Gas pipe sizing - capacity of pipe . . . 36
Smart Equipment Economizer Board details . . . 41
Altitude/temperature correction factors . . . 47
KE blower performance side duct . . . 49
KE blower performance bottom duct . . . 50
Belt drive RPM selection . . . 52
Indoor blower specifications (belt drive) . . . 52
Power exhaust specifications . . . 52
Additional static resistance . . . 53
Electric heat limit setting . . . 57
Electric heat anticipator setpoints . . . 57
Single stage gas heat limit control setting . . . 58
Gas rate-cubit feet per hour . . . 61
Fan setup commands . . . 62
KE036 (3.0 ton) operating pressures . . . 63
KE048 (4.0 Ton) operating pressures . . . 63
KE072 (6.0 ton) operating pressures . . . 64
KE060 (5.0 ton) operating pressures . . . 64
Smart Equipment UCB details . . . 69
Cable for FC buses and SA buses in order of preference . . . 76

List of figures

KE036-072 component location . . . 6
Unit 4 point load weight . . . 8
Unit 6 point load weight . . . 8
Center of gravity . . . 8
KE036-072 cooling only front view physical dimensions . . . 9
KE036-072 cooling only/gas heat front view physical dimensions . . . 9
KE036-072 fixed outdoor air motorized damper rain hood physical dimensions . . . 10
KE036-072 disconnect location . . . 10
KE036-072 unit side duct openings . . . 11
KE036-072 roof curb . . . 11
Condensate drain . . . 12
Compressor restraining bracket . . . 13
Typical cool/heat control wiring (Smart Equipment KE036-072) . . . 15
Typical Smart Equipment control wiring . . . 15
Side entry gas piping . . . 36
Bottom entry gas piping . . . 36
Vent and combustion air hood . . . 37
RRS economizer LCD and keypad layout . . . 38
SE-ECO1001-0 Economizer Controller . . . 41
Belt adjustment . . . 45
Altitude/temperature correction factors . . . 47
Pressure drop across coil . . . 53
Actuator settings . . . 55
Gas valve piping . . . 57
Honeywell VR8204M single stage gas valve . . . 60
White Rodgers 36G32 single stage gas valve . . . 60
Proper flame adjustment . . . 60
Typical flame appearance . . . 60
CWCVT (S1-TL-CWCVT-0) . . . 68
Smart Equipment Unit Control Board . . . 69

General

KE units are either single package cooling units equipped with optional field installed electric heaters, or single package gas-fired central heating furnaces with cooling unit. Both are designed for outdoor installation on a rooftop or slab.

The units are completely assembled on rigid, permanently attached base rails. All piping, refrigerant charge, and electrical wiring is factory installed and tested. The units require electric power, gas connection, duct connections, installation of the weatherproof convenience outlet cover, combustion air inlet hood, flue gas outlet hoods and fixed outdoor air intake damper (units without economizer option only) at the point of installation.

The field installed electric heaters have nickel-chrome elements and utilize single point power connection.

The gas-fired heaters have aluminized-steel or optional stainless steel tubular heat exchangers. The units have spark ignition with proven pilot. All gas heaters are shipped from the factory equipped for natural gas use, but can be field converted to L.P./ Propane with Kit Model #1NP0440 for single stage.

GoTemp Pro

BHC Residential & light Commercial LLC believes in empowering our customers with up-to-date, unit-specific information. Download GoTemp Pro app, a powerful-comprehensive app designed for contractors on the jobsite, available now in the App Store for iOS and Google Play for Android. Use the App to scan the unique QR code on the unit rating plate for easy access to product information and resources such as nomenclature, technical guide, installation manual, wiring diagrams, parts list, product registration, warranty and much more. Simplify your tasks, save time, and stay ahead with the most comprehensive app built for professionals.

GoTemp Pro integrates functionality previously provided by CWa and MAP, allowing you to utilize the on-board communication card or simply plug in the CWCVT to enable Bluetooth connectivity.

Safety considerations

This is a safety alert symbol. When you see this symbol on labels or in manuals, be alert to the potential for personal injury.

Understand and pay particular attention the signal words **DANGER**, **WARNING** or **CAUTION**.

DANGER indicates an **imminently** hazardous situation, which, if not avoided, **will result in death or serious injury.**

WARNING indicates a **potentially** hazardous situation, which, if not avoided, **could result in death or serious injury.**

CAUTION indicates a potentially hazardous situation, which, if not avoided **may result in minor or moderate injury.** It is also used to alert against unsafe practices and hazards involving only property damage.

WARNING

Improper installation may create a condition where the operation of the product could cause personal injury or property damage. Improper installation, adjustment, alteration, service or maintenance can cause injury or property damage. Refer to this manual for assistance or for additional information, consult a qualified contractor, installer or service agency.

CAUTION

This product must be installed in strict compliance with the installation instructions and any applicable local, state and national codes including, but not limited to building, electrical, and mechanical codes.

WARNING

Before performing service or maintenance operations on unit, turn off main power switch to unit. Electrical shock could cause personal injury. Improper installation, adjustment, alteration, service or maintenance can cause injury or property damage. Refer to this manual. For assistance or additional information consult a qualified installer, service agency or the gas supplier.

⚠ WARNING

If the information in this manual is not followed exactly, a fire or explosion may result causing property damage, personal injury or loss of life.

Do not store or use gasoline or other flammable vapors and liquids in the vicinity of this or any other appliance.

WHAT TO DO IF YOU SMELL GAS:

a. Do not try to light any appliance.
b. Do not touch any electrical switch; do not use any phone in your building.
c. Immediately call your gas supplier from a neighbor's phone. Follow the gas supplier's instructions.
d. If you cannot reach your gas supplier, call the fire department.

Installation and service must be performed by a qualified installer, service agency or the gas supplier.

Due to system pressure, moving parts, and electrical components, installation and servicing of air conditioning equipment can be hazardous. Only qualified, trained service personnel should install, repair, or service this equipment. Untrained personnel can perform basic maintenance functions of cleaning coils and filters and replacing filters.

Observe all precautions in the literature, labels, and tags accompanying the equipment whenever working on air conditioning equipment. Be sure to follow all other applicable safety precautions and codes including *ANSI Z223.1* or *CSA-B149.1- latest edition*.

Wear safety glasses and work gloves. Use quenching cloth and have a fire extinguisher available during brazing operations.

Inspection

As soon as a unit is received, it should be inspected for possible damage during transit. If damage is evident, the extent of the damage should be noted on the carrier's freight bill. A separate request for inspection by the carrier's agent should be made in writing.

⚠ CAUTION

This product must be installed in strict compliance with the enclosed installation instructions and any applicable local, state and national codes including, but not limited to, building, electrical, and mechanical codes.

The furnace and its individual shut-off valve must be disconnected from the gas supply piping system during any pressure testing at pressures in excess of 1/2 PSIG.

Pressures greater than 1/2 PSIG will cause gas valve damage resulting in a hazardous condition. If it is subjected to a pressure greater than 1/2 PSIG, the gas valve must be replaced.

The furnace must be isolated from the gas supply piping system by closing its individual manual shut-off valve during any pressure testing of the gas supply piping system at test pressures equal to or less than 1/2 PSIG.

Reference

Additional information is available in the following reference forms:

- *Technical guide - KE/WN 036-072*
- *General installation - KE036-072*

Renewal parts

Contact your local ducted systems parts distribution center for authorized replacement parts.

Approvals

Design certified by CSA as follows:

1. For use as a cooling only unit or a forced air furnace.
2. For outdoor installation only.
3. For installation on combustible material.
4. For use with natural gas (convertible to LP with kit).

⚠ CAUTION

This product must be installed in strict compliance with the enclosed installation instructions and any applicable local, state, and national codes including, but not limited to, building, electrical, and mechanical codes.

⚠ WARNING

Improper installation may create a condition where the operation of the product could cause personal injury or property damage.

Nomenclature

3-6 Ton Model Number Nomenclature

K	E	036	C	00	A	2	A	1	A	A	A	1	A	1

Product Category

K = Package AC, R-454B
W = Package HP, R-454B

Product Identifier

E = Standard Efficiency AC
N = Standard Efficiency HP

Nominal Cooling Capacity

036 = 3 Ton
048 = 4 Ton
060 = 5 Ton
072 = 6 Ton[1]

1. KE models only

Heat Type

C = Cooling Only

Single Stage Natural Gas Heat Options

H = 1 Stage Gas Aluminized Steel
J = 1 Stage Gas Stainless Steel
K = 1 Stage Low Nox Gas Aluminized Steel
L = 1 Stage Low Nox Gas Stainless Steel

Heat Capacity

00 = Cooling Only

Gas MBH Input (Unit Size Allowed)

05 = 50 MBH Input (1 Stage 036)
07 = 75 MBH Input (1 Stage 048)
10 = 100 MBH Input (1 Stage 036, 060, 072)
12 = 125 MBH Input (1 Stage 048, 060, 072)

Blower Option

A = Direct Drive[2]
B = Standard Static
D = High Static

2. 3 - 5 ton only

Voltage

1 = 208/230-1-60[3]
2 = 208/230-3-60
4 = 460-3-60
5 = 575-3-60

3. 3 - 5 ton only

Outdoor Air Option

A = No Economizer
C = Economizer w/o Barometric RLF
F = Econ BAS Rdy w/o Barometric RLF

Service Options

1 = No Service Options
2 = DSC (Disconnect Switch)
3 = NCO (Non-PWR Conv. Outlet)
4 = PCO (Powered Conv. Outlet)
5 = DSC,NCO
6 = DSC,PCO

A = RDS
B = RDS and DSC
C = RDS and NCO
D = RDS and PCO
E = RDS, DSC, and NCO
F = RDS, DSC, and PCO

Sensors

A = No Sensors
B = PHM (Phase Monitor)
C = DFS (Dirty Filter Switch)
D = SSD (Supply Air Smoke DET)
E = RSD (Return Air Smoke DET)
F = PHM,DFS
G = PHM,SSD
H = PHM,RSD
J = DFS,SSD
K = DFS,RSD
L = SSD,RSD
M = PHM,DFS,SSD
N = PHM,DFS,RSD
P = PHM,SSD,RSD
Q = DFS,SSD,RSD
R = PHM,DFS,SSD,RSD

Controls Option

A = Stand Alone Smart Equipment
C = BACnet MSTP,Mdbs,N2 COM Card
M= Verasys Single Zone
N= Verasys Change Over Bypass

Refrigeration

A = Standard Refrigeration
B = ECC (E-Coat Cond Coil)
C = EEC (E-Coat Evap Coil)
F = ECC,EEC

Additional Options

1 = Std Throwaway Filter
2 = 2 in. Pleated Filters (Merv 8)
4 = Coil Guard (CG), STD Filter
5 = 2 in. Pleated Filter,CG

Cabinet Options

A = Std Cabinet
B = HDF(HingedFLTR/Tooless DR)
E = SSD (SST Drain Pan)
F = SSD, HFD

Product Generation

1 = First Generation

Installation

Installation safety information

Read these instructions before continuing this appliance installation. This is an outdoor combination heating and cooling unit. The installer must assure that these instructions are made available to the consumer and with instructions to retain them for future reference.

1. Refer to the unit rating plate for the approved type of gas for this product.
2. Install this unit only in a location and position as specified in the *Location* section of these instructions.
3. Never test for gas leaks with an open flame. Use commercially available soap solution made specifically for the detection of leaks when checking all connections, as specified on Pages 5, 37 and 59 of these instructions.
4. Always install furnace to operate within the furnace's intended temperature-rise range with the duct system and within the allowable external static pressure range, as specified on the unit name/rating plate, specified on page 35 of these instructions.
5. This equipment is not to be used for temporary heating of buildings or structures under construction.

⚠ WARNING

FIRE OR EXPLOSION HAZARD

Failure to follow the safety warning exactly could result in serious injury, death or property damage.

Never test for gas leaks with an open flame. use a commercially available soap solution made specifically for the detection of leaks to check all connections. A fire or explosion may result causing property damage, personal injury or loss of life.

6. If a factory option convenience outlet is installed, the weatherproof outlet cover must be field installed. The cover shall be located behind the blower access panel. To install the cover, remove the shipping label covering the convenience outlet and attach the cover to the unit using the four screws provided.

⚠ CAUTION

208/230-3-60 and 380/415-3-50 units with factory installed Powered Convenience Outlet Option are wired for 230v and 415v power supply respectively. Change tap on transformer for 208-3-60 or 380-3-50 operation. See unit wiring diagram.

Limitations

These units must be installed in accordance with the following:

In U.S.A.:

1. *National Electrical Code, ANSI/NFPA No. 70 - Latest Edition*
2. *National Fuel Gas Code, ANSI Z223.1 - Latest Edition*
3. *Gas-Fired Central Furnace Standard, ANSI Z21.47a. - Latest Edition*
4. Local building codes, and
5. Local gas utility requirements

In Canada:

1. *Canadian Electrical Code, CSA C22.1*
2. *Installation Codes, CSA - B149.1.*
3. Local plumbing and waste water codes, and
4. Other applicable local codes.

Refer to unit application data found in this document.

After installation, gas fired units must be adjusted to obtain a temperature rise within the range specified on the unit rating plate.

If components are to be added to a unit to meet local codes, they are to be installed at the dealer’s and/or customer’s expense.

Size of unit for proposed installation should be based on heat loss/heat gain calculation made according to the methods of Air Conditioning Contractors of America (ACCA).

This furnace is not to be used for temporary heating of buildings or structures under construction.

⚠ CAUTION

The Smart Equipment control board used in this product will effectively operate the cooling system down to 0°F when this product is applied in a comfort cooling application for people. An economizer is typically included in this type of application. When applying this product for process cooling applications (computer rooms, switch gear, etc.), please call the applications department for Ducted Systems @ 1-877-874-SERV for guidance. Additional accessories may be needed for stable operation at temperatures below 30° F.

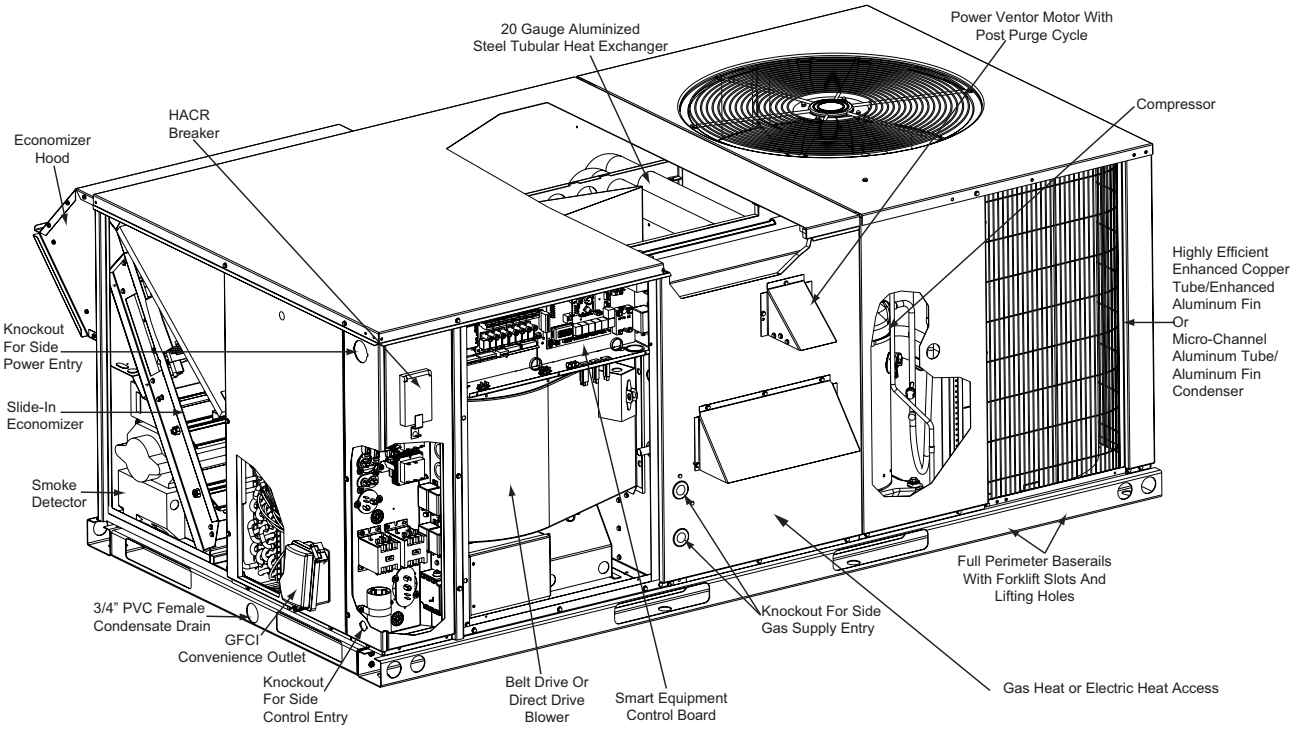

Figure 1: KE036-072 component location

Table 1: KE036-072 unit limitations

Size (ton)	Unit voltage	SCCR (kVA)	Unit limitations		
			Applied voltage		Outdoor DB temp
			Min	Max	Max (°F)
KE036 (3.0)	208/230-1-60	5	187	252	125
	208/230-3-60	5	187	252	125
	460-3-60	5	432	504	125
	575-3-60	5	540	630	125
KE048 (4.0)	208/230-1-60	5	187	252	125
	208/230-3-60	5	187	252	125
	460-3-60	5	432	504	125
	575-3-60	5	540	630	125
KE060 (5.0)	208/230-1-60	5	187	252	125
	208/230-3-60	5	187	252	125
	460-3-60	5	432	504	125
	575-3-60	5	540	630	125
KE072 (6.0)	208/230-3-60	5	187	252	125
	460-3-60	5	432	504	125
	575-3-60	5	540	630	125

Location

Use the following guidelines to select a suitable location for these units:

1. Unit is designed for outdoor installation only.
2. Condenser coils must have an unlimited supply of air. Where a choice of location is possible, position the unit on either north or east side of building.
3. Suitable for mounting on roof curb.
4. For ground level installation, use a level concrete slab with a minimum thickness of 4 in.. The length and width should be at least 6 in. greater than the unit base rails. Do not tie slab to the building foundation.
5. Roof structures must be able to support the weight of the unit and its options/accessories. Unit must be installed on a solid, level roof curb or appropriate angle iron frame.
6. Maintain level tolerance to 1/2 in. across the entire width and length of unit.

⚠ WARNING

Excessive exposure of this furnace to contaminated combustion air may result in equipment damage or personal injury. Typical contaminates include: permanent wave solution, chlorinated waxes and cleaners, chlorine based swimming pool chemicals, water softening chemicals, carbon tetrachloride, Halogen type refrigerants, cleaning solvents (e.g. perchloroethylene), printing inks, paint removers, varnishes, hydrochloric acid, cements and glues, anti static fabric softeners for clothes dryers, masonry acid washing materials.

Clearances

All units require particular clearances for proper operation and service. Installer must make provisions for adequate combustion and ventilation air in accordance with *section 5.3 of Air for Combustion and Ventilation of the National Fuel Gas Code, ANSI Z223.1 – Latest Edition (in U.S.A.), or Sections 7.2, 7.3, or 7.4 of Gas Installation Codes, CSA-B149.1 (in Canada) - Latest Edition*, and/or applicable provisions of the local building codes. Refer to Table 4 for clearances required for combustible construction, servicing, and proper unit operation.

⚠ WARNING

Do not permit overhanging structures or shrubs to obstruct condenser air discharge outlet, combustion air inlet or vent outlets.

Rigging and handling

Exercise care when moving the unit. Do not remove any packaging until the unit is near the place of installation. Rig the unit by attaching chain or cable slings to the lifting holes provided in the base rails. Spreader bars, whose length exceeds the largest dimension across the unit, **MUST** be used across the top of the unit.

⚠ CAUTION

If a unit is to be installed on a roof curb other than a Ducted Systems roof curb, gasketing must be applied to all surfaces that come in contact with the unit underside.

⚠ CAUTION

Before lifting, make sure the unit weight is distributed equally on the rigging cables so it will lift evenly.

Units may be moved or lifted with a forklift Slotted openings in the base rails are provided for this purpose.

Length of forks must be a minimum of 42 in.

⚠ CAUTION

All panels must be secured in place when the unit is lifted.

The condenser coils should be protected from rigging cable damage with plywood or other suitable material.

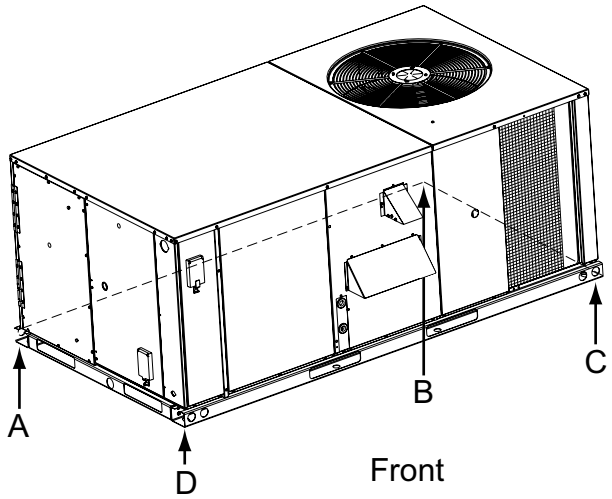

Figure 2: Unit 4 point load weight

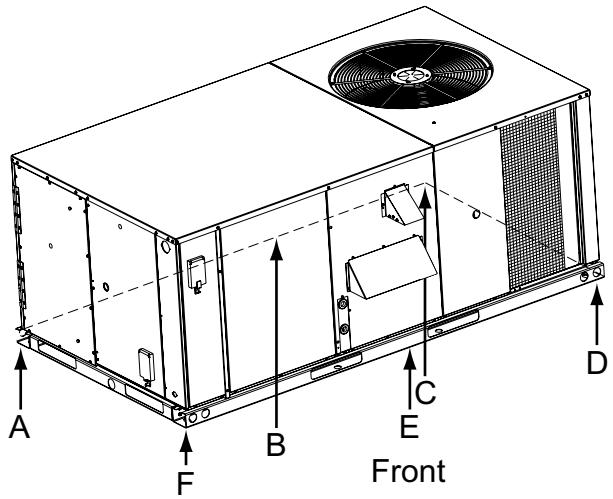

Figure 3: Unit 6 point load weight

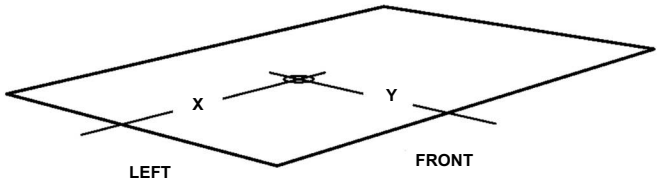

Figure 4: Center of gravity

Table 2: KE036-072

Size (ton)	Weight (lb)		Center of		4 point load location (lb)				6 point load location (lb)					
	Shipping	Operating	X	Y	A	B	C	D	A	B	C	D	E	F
036 (3)	475	470	34.5	18.25	111	80	117	162	78	62	51	74	91	114
048 (4)	603	598	36	18.5	139	108	154	198	96	81	69	98	116	137
060 (5)	637	632	37.5	18.2	139	117	171	204	96	85	76	111	124	140
072 (6)	670	665	35.5	17.75	150	114	173	228	104	86	72	111	132	160

Table 3: KE036-072 unit accessory weights

Unit accessory	Weight (lb)	
	Shipping	Operating
Economizer	55	50
Power exhaust	55	50
Electric heat[1]	28	28
Gas heat[2]	70	70

1. Weight given is for the maximum heater size available (30KW).
2. Weight given is for the maximum number of tube heat exchangers available (5 tube).

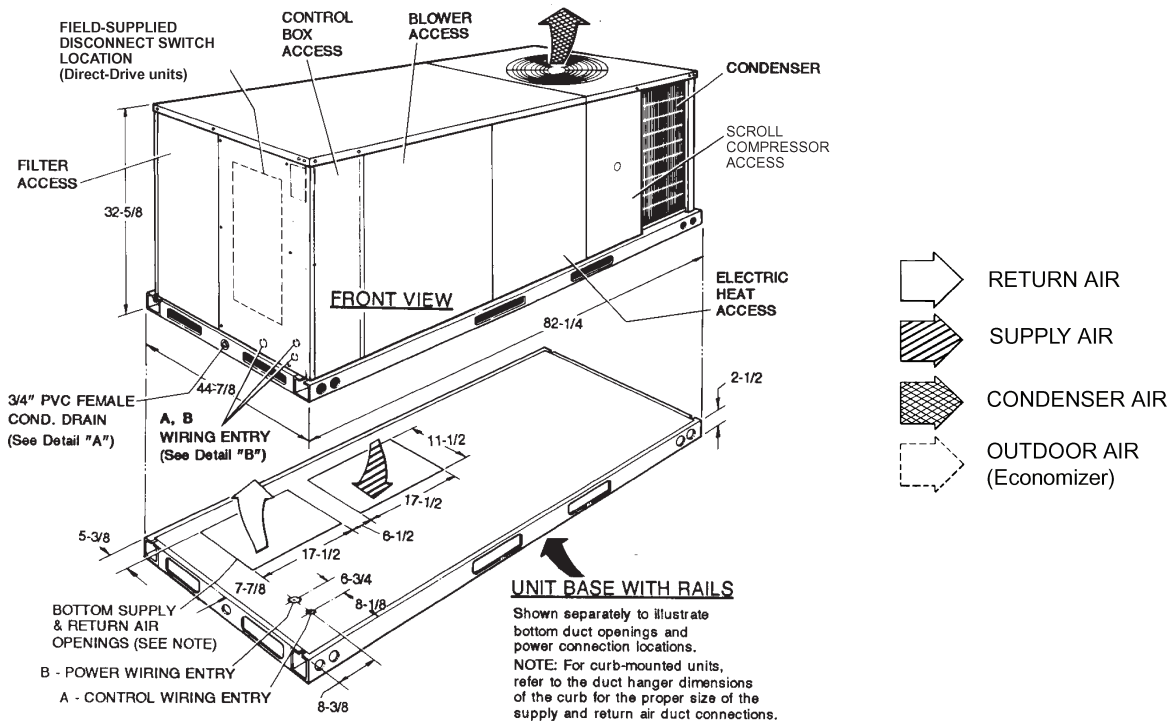

Figure 5: KE036-072 cooling only front view physical dimensions

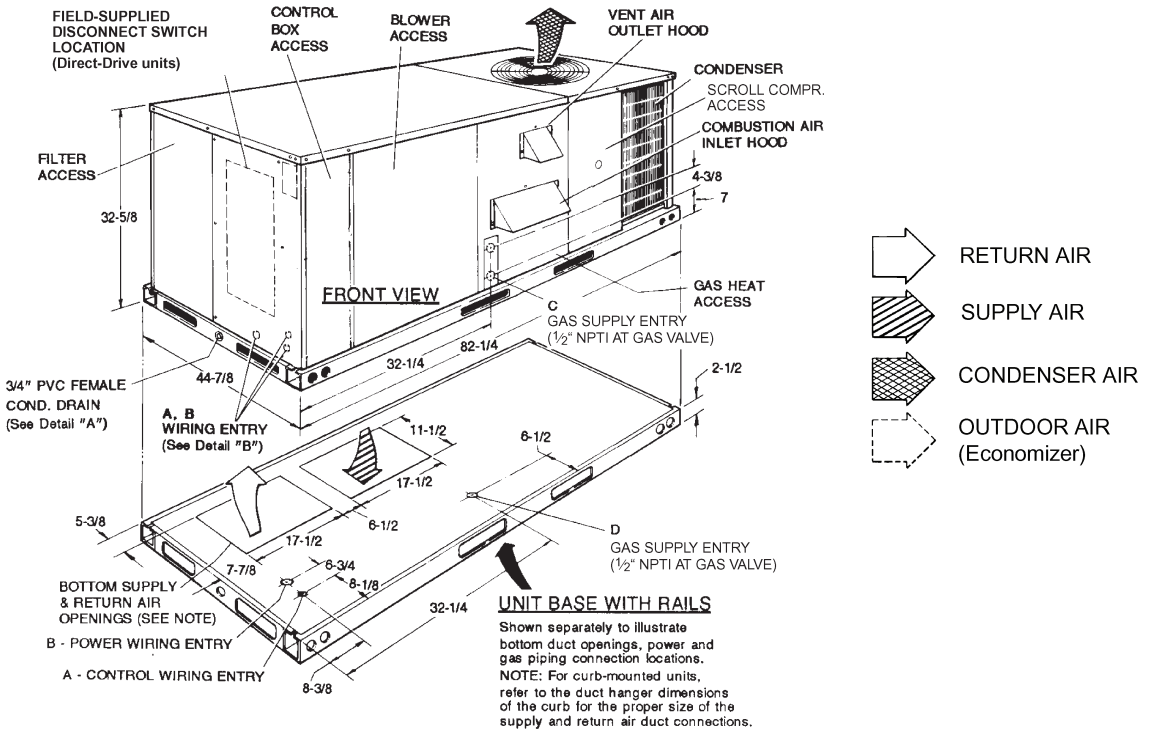

Figure 6: KE036-072 cooling only/gas heat front view physical dimensions

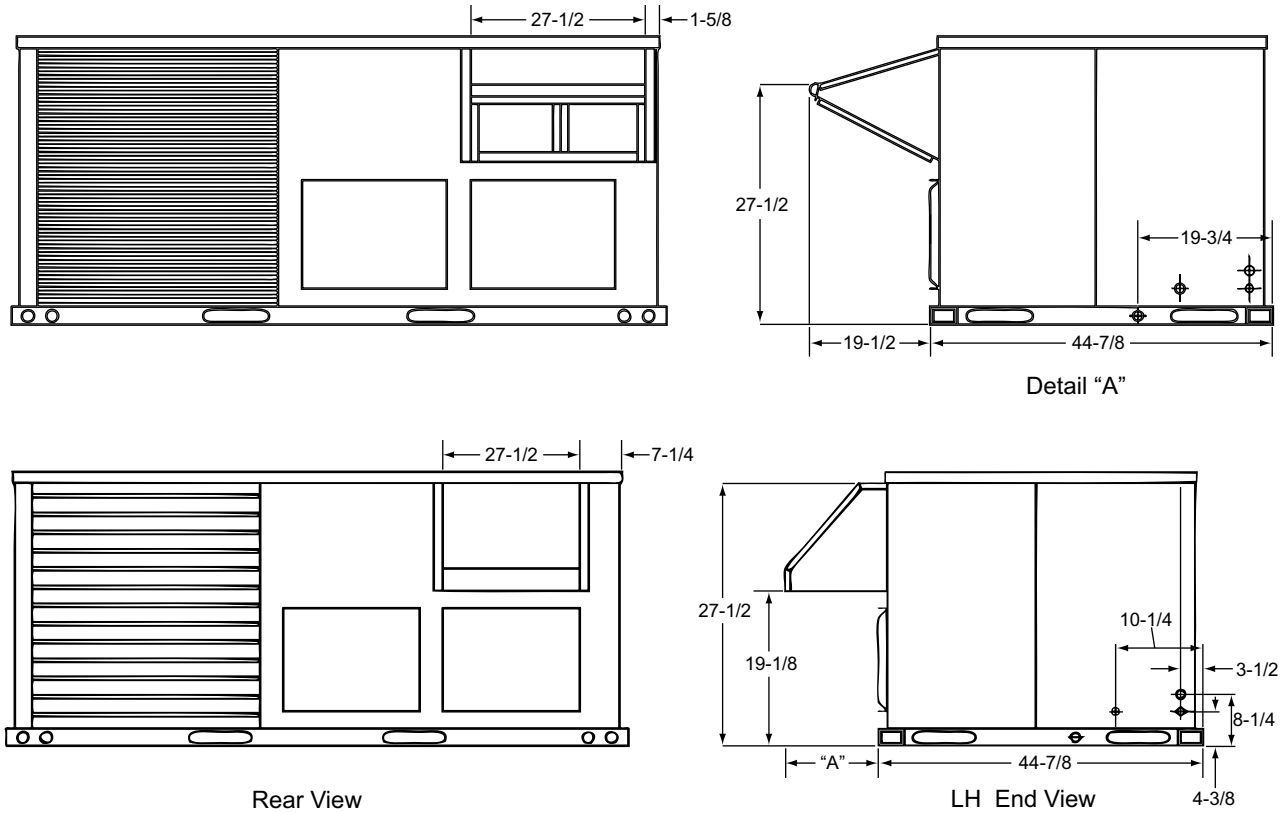

Dimension “A”	
Fixed Outdoor Air Damper	12
Motorized Damper	16-1/2

Detail “B”

Figure 7: KE036-072 fixed outdoor air motorized damper rain hood physical dimensions

Table 4: KE036-072 unit clearances

Location	Clearance
Front	24 in. (Cooling) 32 in. (Gas heat)
Rear	12 in. (Less economizer) 36 in. (With economizer or fixed air)
Left side (filter access)	24 in.(Less economizer) 36 in. (With economizer)
Right side (cond. coil)	24 in.
Below unit[1]	0 in.
Above unit[2]	72 in. (For condenser air discharge)

1. Units may be installed on combustible floors made from wood or class A, B, or C roof covering material.
2. Units must be installed outdoors. Overhanging structures or shrubs should not obstruct condenser air discharge outlet.

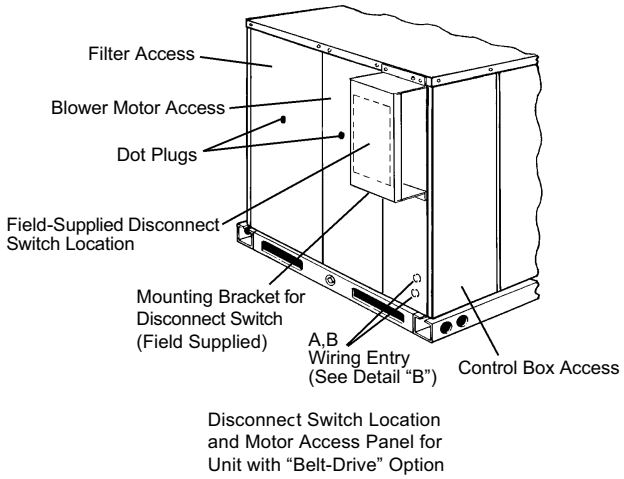

Figure 8: KE036-072 disconnect location

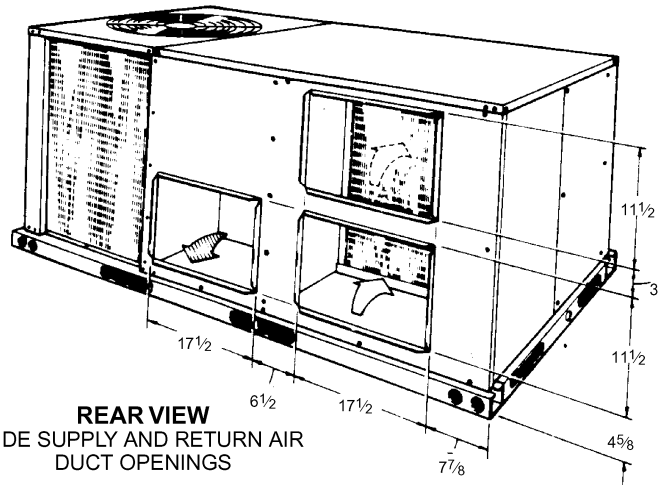

DUCT COVERS - Units are shipped with all air duct openings covered.
For side duct applications;
1. Remove and discard the supply and return air duct covers.
2. Connect ductwork to duct flanges on the rear of the unit.

For bottom duct applications;
1. Remove the side supply air duct cover to gain access to the bottom supply air knockout panel.
2. Remove and discard the bottom knockout panel.
3. Replace the side duct cover.
4. With filter section access panel removed from the unit, remove and discard the bottom return air knockout panel.
5. Replace the filter access panel.

Figure 9: KE036-072 unit side duct openings

Table 5: KE036-072 utilities entry

Hole	Opening size (dia.)	Used For	
A	7/8 in. KO[1]	Control wiring[2]	Side
			Bottom
B	2 in. KO[1]	Power wiring	Side
			Bottom
C	1-5/8 in.KO	Gas piping (front)	
D	1-1/2 in. KO	Gas piping (bottom)	

1. Opening in the bottom to the unit can be located by the slice in the insulation.
2. Do not remove the 2 in. knockout ring.

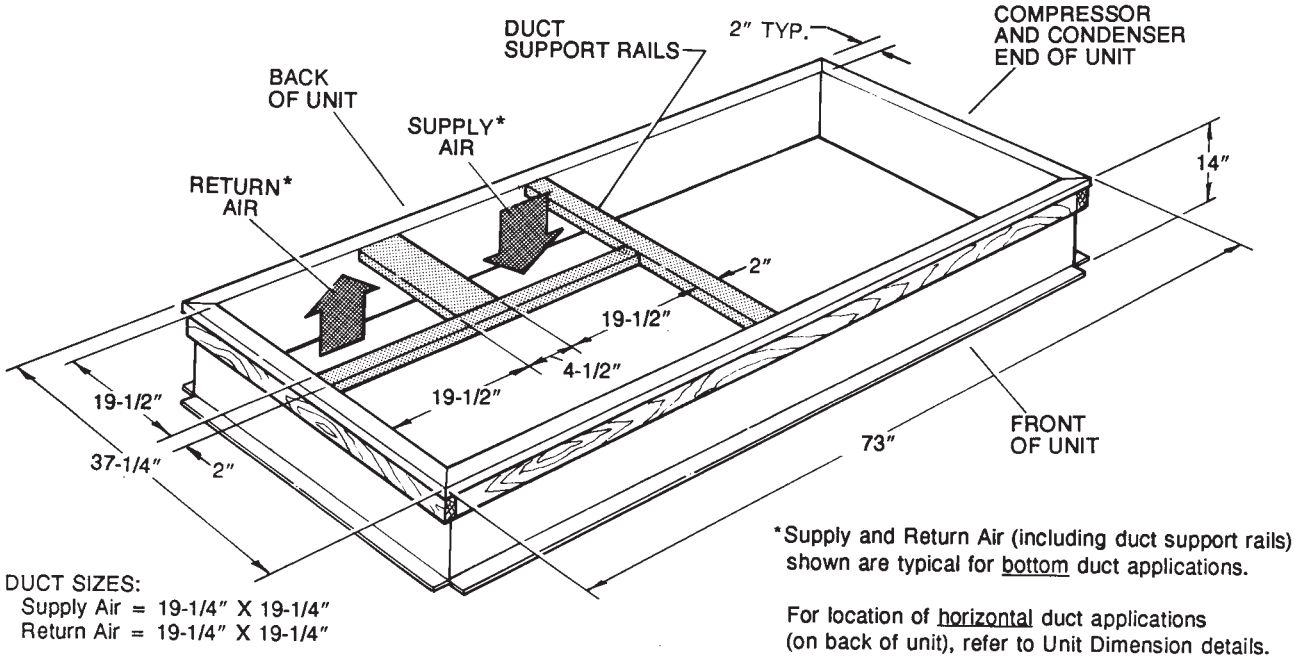

Figure 10: KE036-072 roof curb

Ductwork

Ductwork should be designed and sized according to the methods in *Manual D of the Air Conditioning Contractors of America (ACCA)* or as instructed by any other recognized authority such as ASHRAE or SMACNA.

A closed return duct system should be used. This will not preclude use of economizers or outdoor fresh air intake. The supply and return air duct connections at the unit should be made with flexible joints to minimize noise.

The supply and return air duct systems should be designed for the CFM and static pressure requirements of the job. They should NOT be sized to match the dimensions of the duct connections on the unit.

Refer to Figures 5 and 6 for bottom air duct openings. Refer to Figure 9 for side air duct openings.

⚠ CAUTION

When fastening ductwork to side duct flanges on unit, insert screws through duct flanges only. DO NOT insert screws through casing. Outdoor ductwork must be insulated and water-proofed.

Note: It is recommended that, in Canada, the outlet duct be provided with a removable access panel. It is recommended that this opening be accessible when the unit is installed in service, and of a size such that smoke or reflected light may be observed inside the casing to indicate the presence of leaks in the heat exchanger. The cover should be attached in a manner adequate to prevent leakage.

Condensate drain

Plumbing must conform to local codes. Use a sealing compound on male pipe threads. Install a condensate drain line from the 3/4 in. NPT female connection on the unit to an open drain.

Note: The condensate drain operates in a negative pressure in the cabinet. The condensate drain line must be trapped to provide proper drainage. See Figure 11.

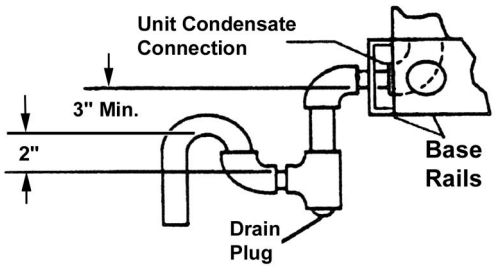

Figure 11: Condensate drain

Compressors

The scroll compressor used in this product is specifically designed to operate with R-454B Refrigerant and cannot be interchanged.

The compressor also uses a polyolester (POE oil), Mobil 3MA POE. This oil is extremely hygroscopic, meaning it absorbs water readily. POE oil can absorb 15 times as much water as other oils designed for HCFC and CFC refrigerants. Take all necessary precautions to avoid exposure of the oil to the atmosphere.

⚠ CAUTION

Do not leave the system open to the atmosphere. Unit damage could occur due to moisture being absorbed by the **POE oil** in the system. This type of oil is highly susceptible to moisture absorption

POE (polyolester) compressor lubricants are known to cause long term damage to some synthetic roofing materials.

⚠ CAUTION

Exposure, even if immediately cleaned up, may cause embrittlement (leading to cracking) to occur in one year or more. When performing any service that may risk exposure of compressor oil to the roof, take precautions to protect roofing.

Procedures which risk oil leakage include, but are not limited to, compressor replacement, repairing refrigerant leaks, replacing refrigerant components such as filter drier, pressure switch, metering device or coil.

Units are shipped with compressor mountings which are factory-adjusted and ready for operation.

Units with scroll compressors have a shipping bracket which must be removed after the unit is set in place. See Figure 12.

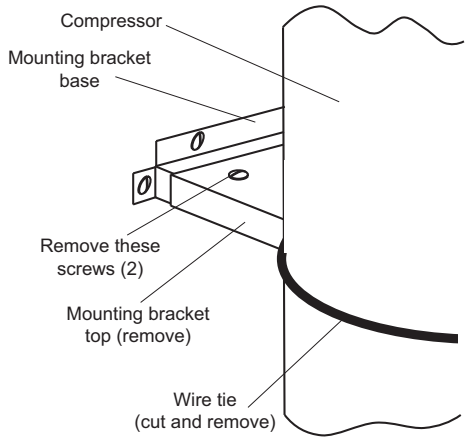

Figure 12: Compressor restraining bracket

⚠ CAUTION

Do not loosen compressor mounting bolts.

Filters

1 in. or 2 in. filters can be supplied with each unit. One-inch filters may be used with no modification to the filter racks. Filters must always be installed ahead of evaporator coil and must be kept clean or replaced with same size and type. Dirty filters reduce the capacity of the unit and result in frosted coils or safety shutdown. Refer to physical data tables, for the number and size of filters needed for the unit. The unit should not be operated without filters properly installed.

⚠ CAUTION

Make sure that panel latches are properly positioned on the unit to maintain an airtight seal.

Power and control wiring

Field wiring to the unit, fuses, and disconnects must conform to provisions of National Electrical Code (NEC), ANSI/NFPA No. 70 – Latest Edition (in U.S.A.), current Canadian Electrical Code C221, and/or local ordinances. The unit must be electrically grounded in accordance with NEC and CEC as specified above and/or local codes.

Voltage tolerances which must be maintained at the compressor terminals during starting and running conditions are indicated on the unit Rating Plate and Table 1.

⚠ CAUTION

208/230-3-60 and 380/415-3-50 units control transformers are factory wired for 230v and 415v power supply respectively. Change tap on transformer for 208-3-60 or 380-3-50 operation. See unit wiring diagram.

The internal wiring harnesses furnished with this unit are an integral part of the design certified unit. Field alteration to comply with electrical codes is not normally required. If any of the wire supplied with the unit needs to be replaced, the replacement wire must be of the type shown on the wiring diagram and the same minimum gauge as the replaced wire.

A disconnect must be utilized for these units. Factory-installed disconnects are available.

⚠ CAUTION

Avoid damage to internal components if drilling holes for disconnect mounting.

Note: Since not all local codes allow the mounting of a disconnect on the unit, please confirm compliance with local code before mounting a disconnect on the unit.

Electrical line must be sized properly to carry the load. Each unit must be wired with a separate branch circuit fed directly from the meter panel and properly fused.

Refer to Figures and 14 for typical field wiring and to the appropriate unit wiring diagram mounted inside control doors for control circuit and power wiring information.

⚠ CAUTION

When connecting electrical power and control wiring to the unit, water-proof connectors must be used so that water or moisture cannot be drawn into the unit during normal operation. The above water-proofing conditions will also apply when installing a field supplied disconnect switch.

⚠ CAUTION

When installing equipment in a facility with a 3 phase high-leg delta power supply, care must be taken to ensure that the high-leg conductor is not attached to either of the two legs of the (single phase, direct drive) X13 or ECM motors. Failure to do so can result in the motor acting erratically or not running at all.

Check for the high leg conductor by checking voltage of each phase to ground.

Example: A or L1 phase to ground, voltage reading is 120V. B or L2 phase to ground, voltage reading is 195 to 208V. C or L3 phase to ground, voltage reading is 120V. Therefore B or L2 phase is the high Leg. The high should always be wired to the center or B or L2 tap.

Note: Check all three phase motors and compressors for proper rotation after making a change. If it is necessary to change 3 phase motor rotation, swap A or L1 and C or L3 only.

Convenience outlet

If a factory option convenience outlet is installed, the weatherproof outlet cover must be field installed. The cover shall be located behind the filter access panel. To install the cover, remove the convenience outlet shipping label located in the lower section of the control panel, and attach the cover to the unit using the 4 screws provided.

⚠ CAUTION

208/230-3-60 and 380/415-3-50 units with factory installed Powered Convenience Outlet Option are wired for 230v and 415v power supply respectively. Change tap on transformer for 208-3-60 or 380-3-50 operation. See unit wiring diagram.

Power wiring detail

Units are factory wired for the voltage shown on the unit nameplate. Refer to Electrical Data Table 7 to size power wiring, fuses, and disconnect switch.

Power wiring is brought into the unit through the side of the unit or the basepan inside the curb.

Thermostat wiring

The thermostat should be located on an inside wall approximately 56 in. above the floor where it will not be subject to drafts, sun exposure or heat from electrical fixtures or appliances. Follow the manufacturer's instructions enclosed with thermostat for general installation procedure. Eight color-coded, insulated wires should be used to connect the thermostat to the unit. Refer to Table 6 for control wire sizing and maximum length.

Table 6: Control wire sizes

Wire size	Maximum length[1]
18 AWG	150 Feet

1. From the unit to the thermostat and back to the unit.

Typical field power and control wiring

Typical power wiring

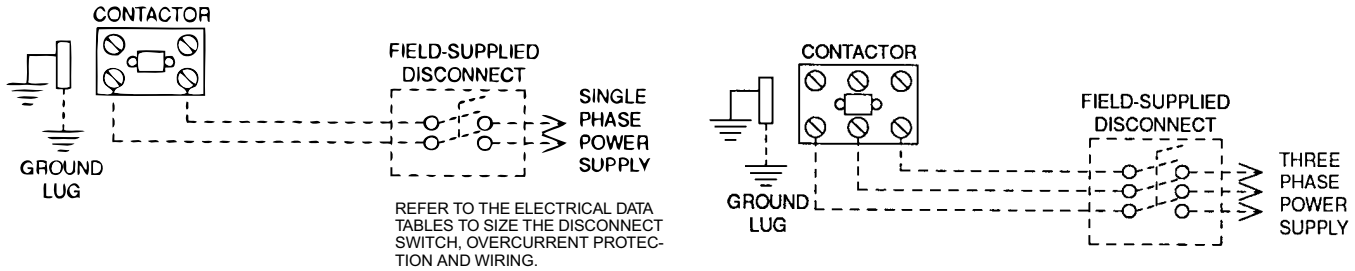

Figure 13: Typical cool/heat control wiring (Smart Equipment KE036-072)

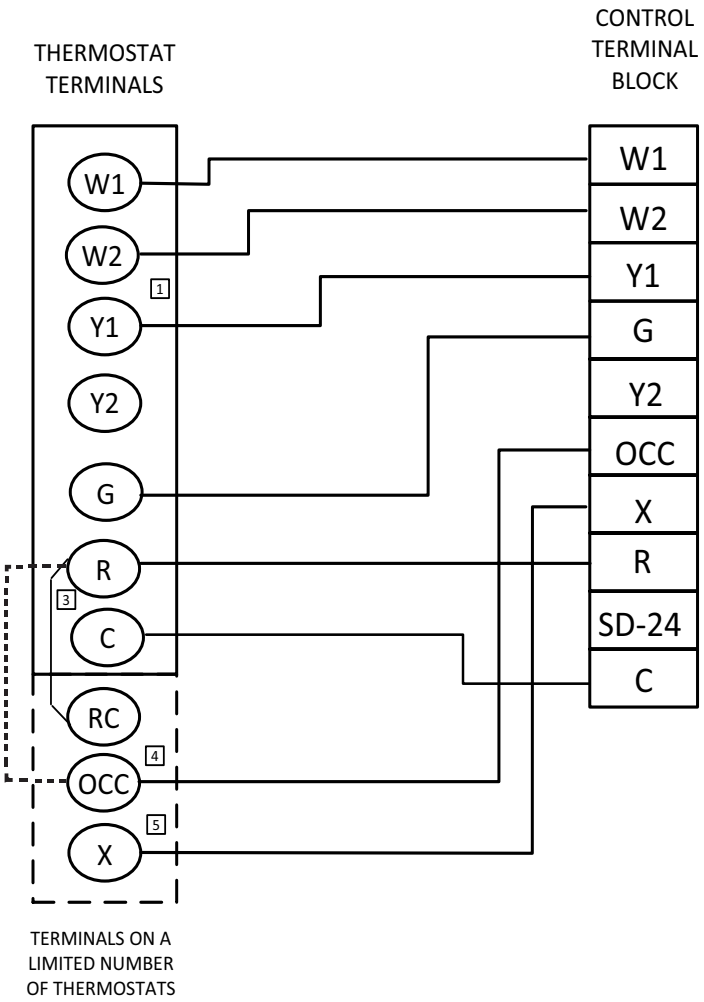

R~Occ Jumper:
Smart Equipment Control boards come from the factory with a jumper wire between R and OCC terminals on the thermostat terminal strip. Failure to remove this jumper will place the unit into the Occupied mode no matter what the occupancy demand is from the thermostat or EMS system. To allow Thermostat or EMS control of the Occupied mode for the unit, this jumper must be removed during commissioning.

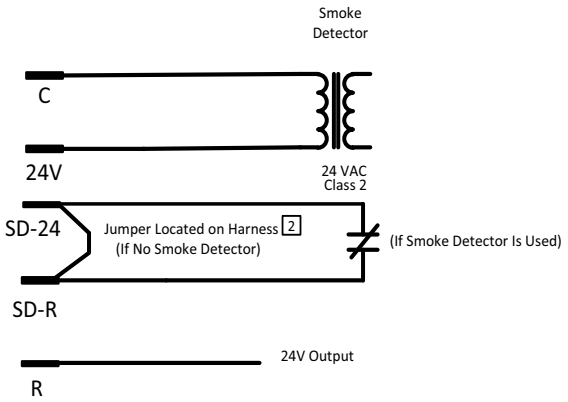

1 Second stage heating not required on single stage heating units.

2 Jumper is required if there is no Smoke Detector circuit.

3 Jumper is required for any combination of R, RC, or RH.

4 OCC is an output from the thermostat to indicate the Occupied condition.

5 X is an input to the thermostat to display Error Status conditions.

Figure 14: Typical Smart Equipment control wiring

Table 7: Electrical data

KE036-060 (direct drive) without powered convenience outlet

Size (ton)	Volt	Compressors (each)			OD fan motors (each)	Supply blower motor	Pwr conv outlet	Electric heat accessory				MCA[1] (A)	Max fuse[2]/ breaker[3] size (A)
		RLA	LRA	MCC	FLA	FLA	FLA	Model	kW	Stages	Amps		
036 (3)	208-1-60	16.7	93.5	26	2.3	6		None	-	-	-	29.2	40
								E05	4	1	19.2	31.5	40
								E07	5.6	1	26.9	41.1	45
								E10	8	1	38.5	55.6	60
								E15	11.9	1	57.2	79	80
								E20	15.9	2	76.4	103	110
	230-1-60	16.7	93.5	26	2.3	6		None	-	-	-	29.5	40
								E05	5.3	1	22.1	35.1	45
								E07	7.5	1	31.3	46.6	50
								E10	10.6	1	44.2	62.8	70
								E15	15.9	1	66.3	90.4	100
								E20	21.2	2	88.3	117.9	125
	208-3-60	12.2	97.5	19	2.3	6		None	-	-	-	23.6	30
								E05	4	1	11.1	23.6	30
								E07	5.6	1	15.5	26.9	35
								E10	8	1	22.2	35.3	40
								E15	11.9	1	33	48.8	50
								E20	15.9	2	44.1	62.6	70
	230-3-60	12.2	97.5	19	2.3	6		None	-	-	-	23.9	30
								E05	5.3	1	12.7	23.9	30
								E07	7.5	1	18	30	35
								E10	10.6	1	25.5	39.4	40
								E15	15.9	1	38.2	55.3	60
								E20	21.2	2	51	71.3	80
048 (4)	208-1-60	22.4	126	35	2.3	7.6		None	-	-	-	37.9	50
								E05	4	1	19.2	37.9	50
								E07	5.6	1	26.9	43.1	60
								E10	8	1	38.5	57.6	60
								E15	11.9	1	57.2	81	90
								E20	15.9	2	76.4	105	110
	230-1-60	22.4	126	35	2.3	7.6		None	-	-	-	38.2	50
								E05	5.3	1	22.1	38.2	50
								E07	7.5	1	31.3	48.6	60
								E10	10.6	1	44.2	64.8	70
								E15	15.9	1	66.3	92.4	100
								E20	21.2	2	88.3	119.9	125
	208-3-60	12.8	120.4	20	2.3	7.6		None	-	-	-	25.9	35
								E05	4	1	11.1	25.9	35
								E07	5.6	1	15.5	28.9	35
								E10	8	1	22.2	37.3	40
								E15	11.9	1	33	50.8	60
								E20	15.9	2	44.1	64.6	70
	230-3-60	12.8	120.4	20	2.3	7.6		None	-	-	-	26.2	35
								E05	5.3	1	12.7	26.2	35
								E07	7.5	1	18	32	35
								E10	10.6	1	25.5	41.4	45
								E15	15.9	1	38.2	57.3	60
								E20	21.2	2	51	73.3	80

KE036-060 (direct drive) without powered convenience outlet (Continued)

Size (ton)	Volt	Compressors (each)			OD fan motors (each)	Supply blower motor	Pwr conv outlet	Electric heat accessory				MCA[1] (A)	Max fuse[2]/ breaker[3] size (A)
		RLA	LRA	MCC	FLA	FLA	FLA	Model	kW	Stages	Amps		
060 (5)	208-1-60	23.7	157	37	2.8	7.6		None	-	-	-	40	60
								E05	4	1	19.2	40	60
								E07	5.6	1	26.9	43.1	60
								E10	8	1	38.5	57.6	60
								E15	11.9	1	57.2	81	90
								E20	15.9	2	76.4	105	110
								E30	22.2	2	106.7	142.9	150
	230-1-60	23.7	157	37	2.8	7.6		None	-	-	-	40	60
								E05	5.3	1	22.1	40	60
								E07	7.5	1	31.3	48.6	60
								E10	10.6	1	44.2	64.8	70
								E15	15.9	1	66.3	92.4	100
								E20	21.2	2	88.3	119.9	125
								E30	29.6	2	123.3	163.6	175
	208-3-60	16	156.4	25	2.8	7.6		None	-	-	-	30.4	40
								E05	4	1	11.1	30.4	40
								E07	5.6	1	15.5	30.4	40
								E10	8	1	22.2	37.3	45
								E15	11.9	1	33	50.8	60
								E20	15.9	2	44.1	64.6	70
								E30	22.2	2	61.6	86.5	90
	230-3-60	16	156.4	25	2.8	7.6		None	-	-	-	30.4	40
								E05	5.3	1	12.7	30.4	40
								E07	7.5	1	18	32	45
								E10	10.6	1	25.5	41.4	45
								E15	15.9	1	38.2	57.3	60
								E20	21.2	2	51	73.3	80
								E30	29.6	2	71.2	98.5	100

1. Minimum Circuit Ampacity.
2. Dual element, time delay type.
3. HACR type per NEC.

KE036-060 (direct drive) with powered convenience outlet

Size (ton)	Volt	Compressors (each)			OD fan motors (each)	Supply blower motor	Pwr conv outlet	Electric heat accessory				MCA[1] (A)	Max fuse[2]/ breaker[3] size (A)
		RLA	LRA	MCC	FLA	FLA	FLA	Model	kW	Stages	Amps		
036 (3)	208-1-60	16.7	93.5	26	2.3	6	20	None	-	-	-	39.2	50
								E05	4	1	19.2	44	50
								E07	5.6	1	26.9	53.6	60
								E10	8	1	38.5	68.1	70
								E15	11.9	1	57.2	91.5	100
								E20	15.9	2	76.4	115.5	125
	230-1-60	16.7	93.5	26	2.3	6	20	None	-	-	-	39.5	50
								E05	5.3	1	22.1	47.6	50
								E07	7.5	1	31.3	59.1	60
								E10	10.6	1	44.2	75.3	80
								E15	15.9	1	66.3	102.9	110
								E20	21.2	2	88.3	130.4	150
	208-3-60	12.2	97.5	19	2.3	6	20	None	-	-	-	33.6	45
								E05	4	1	11.1	33.9	45
								E07	5.6	1	15.5	39.4	45
								E10	8	1	22.2	47.8	50
								E15	11.9	1	33	61.3	70
								E20	15.9	2	44.1	75.1	80
	230-3-60	12.2	97.5	19	2.3	6	20	None	-	-	-	33.9	45
								E05	5.3	1	12.7	35.9	45
								E07	7.5	1	18	42.5	45
								E10	10.6	1	25.5	51.9	60
								E15	15.9	1	38.2	67.8	70
								E20	21.2	2	51	83.8	90
048 (4)	208-1-60	22.4	126	35	2.3	7.6	20	None	-	-	-	47.9	60
								E05	4	1	19.2	47.9	60
								E07	5.6	1	26.9	55.6	70
								E10	8	1	38.5	70.1	80
								E15	11.9	1	57.2	93.5	100
								E20	15.9	2	76.4	117.5	125
	230-1-60	22.4	126	35	2.3	7.6	20	None	-	-	-	48.2	70
								E05	5.3	1	22.1	49.6	70
								E07	7.5	1	31.3	61.1	70
								E10	10.6	1	44.2	77.3	80
								E15	15.9	1	66.3	104.9	110
								E20	21.2	2	88.3	132.4	150
	208-3-60	12.8	120.4	20	2.3	7.6	20	None	-	-	-	35.9	45
								E05	4	1	11.1	35.9	45
								E07	5.6	1	15.5	41.4	45
								E10	8	1	22.2	49.8	50
								E15	11.9	1	33	63.3	70
								E20	15.9	2	44.1	77.1	80
	230-3-60	12.8	120.4	20	2.3	7.6	20	None	-	-	-	36.2	45
								E05	5.3	1	12.7	37.9	45
								E07	7.5	1	18	44.5	45
								E10	10.6	1	25.5	53.9	60
								E15	15.9	1	38.2	69.8	70
								E20	21.2	2	51	85.8	90

KE036-060 (direct drive) with powered convenience outlet (Continued)

Size (ton)	Volt	Compressors (each)			OD fan motors (each)	Supply blower motor	Pwr conv outlet	Electric heat accessory				MCA[1] (A)	Max fuse[2]/ breaker[3] size (A)
		RLA	LRA	MCC	FLA	FLA	FLA	Model	kW	Stages	Amps		
060 (5)	208-1-60	23.7	157	37	2.8	7.6	20	None	-	-	-	50	70
								E05	4	1	19.2	50	70
								E07	5.6	1	26.9	55.6	70
								E10	8	1	38.5	70.1	80
								E15	11.9	1	57.2	93.5	100
								E20	15.9	2	76.4	117.5	125
								E30	22.2	2	106.7	155.4	175
	230-1-60	23.7	157	37	2.8	7.6	20	None	-	-	-	50	70
								E05	5.3	1	22.1	50	70
								E07	7.5	1	31.3	61.1	70
								E10	10.6	1	44.2	77.3	80
								E15	15.9	1	66.3	104.9	110
								E20	21.2	2	88.3	132.4	150
								E30	29.6	2	123.3	176.1	200
	208-3-60	16	156.4	25	2.8	7.6	20	None	-	-	-	40.4	50
								E05	4	1	11.1	40.4	50
								E07	5.6	1	15.5	41.4	50
								E10	8	1	22.2	49.8	50
								E15	11.9	1	33	63.3	70
								E20	15.9	2	44.1	77.1	80
								E30	22.2	2	61.6	99	100
	230-3-60	16	156.4	25	2.8	7.6	20	None	-	-	-	40.4	50
								E05	5.3	1	12.7	40.4	50
								E07	7.5	1	18	44.5	50
								E10	10.6	1	25.5	53.9	60
								E15	15.9	1	38.2	69.8	70
								E20	21.2	2	51	85.8	90
								E30	29.6	2	71.2	111	125

1. Minimum Circuit Ampacity.
2. Dual element, time delay type.
3. HACR type per NEC.

KE036-072 standard indoor blower without powered convenience outlet

Size (ton)	Volt	Compressors (each)			OD fan motors (each)	Supply blower motor	Pwr conv outlet	Electric heat accessory				MCA[1] (A)	Max fuse[2]/ breaker[3] size (A)
		RLA	LRA	MCC	FLA	FLA	FLA	Model	kW	Stages	Amps		
036 (3)	208-1-60	16.7	93.5	26	2.3	6.7		None	-	-	-	29.9	40
								E05	4	1	19.2	32.4	45
								E07	5.6	1	26.9	42	45
								E10	8	1	38.5	56.5	60
								E15	11.9	1	57.2	79.9	80
								E20	15.9	2	76.4	103.9	110
	230-1-60	16.7	93.5	26	2.3	6.7		None	-	-	-	30.2	40
								E05	5.3	1	22.1	36	45
								E07	7.5	1	31.3	47.5	50
								E10	10.6	1	44.2	63.6	70
								E15	15.9	1	66.3	91.3	100
								E20	21.2	2	88.3	118.8	125
	208-3-60	12.2	97.5	19	2.3	4.3		None	-	-	-	21.9	30
								E05	4	1	11.1	21.9	30
								E07	5.6	1	15.5	24.8	30
								E10	8	1	22.2	33.1	35
								E15	11.9	1	33	46.6	50
								E20	15.9	2	44.1	60.5	70
	230-3-60	12.2	97.5	19	2.3	4.3		None	-	-	-	22.2	30
								E05	5.3	1	12.7	22.2	30
								E07	7.5	1	18	27.9	30
								E10	10.6	1	25.5	37.3	40
								E15	15.9	1	38.2	53.1	60
								E20	21.2	2	51	69.1	70
	460-3-60	5.8	44.3	9	1.1	2.1		None	-	-	-	10.5	15
								E07	6.8	1	8.2	12.9	15
								E10	10.1	1	12.1	17.8	20
								E15	13.6	1	16.4	23.1	25
								E20	19.5	2	23.5	32	35
	575-3-60	4.5	27.1	7	1.1	1.9		None	-	-	-	8.4	15
								E10	10.6	1	10.2	15.1	20
								E15	15.9	1	15.3	21.5	25
								E20	21.2	2	20.4	27.9	30

KE036-072 standard indoor blower without powered convenience outlet (Continued)

Size (ton)	Volt	Compressors (each)			OD fan motors (each)	Supply blower motor	Pwr conv outlet	Electric heat accessory				MCA[1] (A)	Max fuse[2]/ breaker[3] size (A)
		RLA	LRA	MCC	FLA	FLA	FLA	Model	kW	Stages	Amps		
048 (4)	208-1-60	22.4	126	35	2.3	6.7		None	-	-	-	37	50
								E05	4	1	19.2	37	50
								E07	5.6	1	26.9	42	50
								E10	8	1	38.5	56.5	60
								E15	11.9	1	57.2	79.9	80
								E20	15.9	2	76.4	103.9	110
	230-1-60	22.4	126	35	2.3	6.7		None	-	-	-	37.3	50
								E05	5.3	1	22.1	37.3	50
								E07	7.5	1	31.3	47.5	50
								E10	10.6	1	44.2	63.6	70
								E15	15.9	1	66.3	91.3	100
								E20	21.2	2	88.3	118.8	125
	208-3-60	12.8	120.4	20	2.3	4.3		None	-	-	-	22.6	30
								E05	4	1	11.1	22.6	30
								E07	5.6	1	15.5	24.8	35
								E10	8	1	22.2	33.1	35
								E15	11.9	1	33	46.6	50
								E20	15.9	2	44.1	60.5	70
	230-3-60	12.8	120.4	20	2.3	4.3		None	-	-	-	22.9	30
								E05	5.3	1	12.7	22.9	30
								E07	7.5	1	18	27.9	35
								E10	10.6	1	25.5	37.3	40
								E15	15.9	1	38.2	53.1	60
								E20	21.2	2	51	69.1	70
	460-3-60	6	49.4	9	1.1	2.1		None	-	-	-	10.7	15
								E07	6.8	1	8.2	12.9	15
								E10	10.1	1	12.1	17.8	20
								E15	13.6	1	16.4	23.1	25
								E20	19.5	2	23.5	32	35
	575-3-60	5.8	41	9	1	1.9		None	-	-	-	10	15
								E10	10.6	1	10.2	15.1	20
								E15	15.9	1	15.3	21.5	25
								E20	21.2	2	20.4	27.9	30

KE036-072 standard indoor blower without powered convenience outlet (Continued)

Size (ton)	Volt	Compressors (each)			OD fan motors (each)	Supply blower motor	Pwr conv outlet	Electric heat accessory				MCA[1] (A)	Max fuse[2]/ breaker[3] size (A)
		RLA	LRA	MCC	FLA	FLA	FLA	Model	kW	Stages	Amps		
060 (5)	208-1-60	23.7	157	37	2.8	6.7		None	-	-	-	39.1	50
								E05	4	1	19.2	39.1	50
								E07	5.6	1	26.9	42	60
								E10	8	1	38.5	56.5	60
								E15	11.9	1	57.2	79.9	80
								E20	15.9	2	76.4	103.9	110
								E30	22.2	2	106.7	141.8	150
	230-1-60	23.7	157	37	2.8	6.7		None	-	-	-	39.1	50
								E05	5.3	1	22.1	39.1	50
								E07	7.5	1	31.3	47.5	60
								E10	10.6	1	44.2	63.6	70
								E15	15.9	1	66.3	91.3	100
								E20	21.2	2	88.3	118.8	125
								E30	29.6	2	123.3	162.5	175
	208-3-60	16	156.4	25	2.8	4.3		None	-	-	-	27.1	35
								E05	4	1	11.1	27.1	35
								E07	5.6	1	15.5	27.1	35
								E10	8	1	22.2	33.1	40
								E15	11.9	1	33	46.6	50
								E20	15.9	2	44.1	60.5	70
								E30	22.2	2	61.6	82.4	90
	230-3-60	16	156.4	25	2.8	4.3		None	-	-	-	27.1	35
								E05	5.3	1	12.7	27.1	35
								E07	7.5	1	18	27.9	35
								E10	10.6	1	25.5	37.3	40
								E15	15.9	1	38.2	53.1	60
								E20	21.2	2	51	69.1	70
								E30	29.6	2	71.2	94.4	100
	460-3-60	7.1	69	11	2.8	2.1		None	-	-	-	12.4	15
								E07	6.8	1	8.2	12.9	15
								E10	10.1	1	12.1	17.8	20
								E15	13.6	1	16.4	23.1	25
								E20	19.5	2	23.5	32	35
								E30	28.8	2	34.6	45.9	50
	575-3-60	6.4	47.8	10	2.8	1.9		None	-	-	-	11	15
								E10	10.6	1	10.2	15.1	20
								E15	15.9	1	15.3	21.5	25
								E20	21.2	2	20.4	27.9	30
								E30	30.4	2	29.3	39	40

KE036-072 standard indoor blower without powered convenience outlet (Continued)

Size (ton)	Volt	Compressors (each)			OD fan motors (each)	Supply blower motor	Pwr conv outlet	Electric heat accessory				MCA[1] (A)	Max fuse[2]/ breaker[3] size (A)
		RLA	LRA	MCC	FLA	FLA	FLA	Model	kW	Stages	Amps		
072 (6)	208-3-60	19.2	162.3	30	4.4	9		None	-	-	-	37.4	50
								E05	4	1	11.1	37.4	50
								E07	5.6	1	15.5	37.4	50
								E10	8	1	22.2	39	50
								E15	11.9	1	33	52.5	60
								E20	15.9	2	44.1	66.4	70
								E30	22.2	2	61.6	88.3	90
	230-1-60	19.2	162.3	30	4.4	9		None	-	-	-	37.4	50
								E05	5.3	1	12.7	37.4	50
								E07	7.5	1	18	37.4	50
								E10	10.6	1	25.5	43.1	50
								E15	15.9	1	38.2	59	60
								E20	21.2	2	51	75	80
								E30	29.6	2	71.2	100.3	110
	460-3-60	9.1	70.8	14	2.4	4.6		None	-	-	-	18.4	25
								E07	6.8	1	8.2	18.4	25
								E10	10.1	1	12.1	20.9	25
								E15	13.6	1	16.4	26.3	30
								E20	19.5	2	23.5	35.1	40
								E30	28.8	2	34.6	49	50
	575-3-60	6.2	58.2	10	4.4	3.5		None	-	-	-	13.1	15
								E10	10.6	1	10.2	17.1	20
								E15	15.9	1	15.3	23.5	25
								E20	21.2	2	20.4	29.9	30
								E30	30.4	2	29.3	41	45

1. Minimum Circuit Ampacity.
2. Dual element, time delay type.
3. HACR type per NEC.

KE036-072 standard indoor blower - with powered convenience outlet

Size (ton)	Volt	Compressors (each)			OD fan motors (each)	Supply blower motor	Pwr conv outlet	Electric heat accessory				MCA[1] (A)	Max fuse[2]/ breaker[3] size (A)
		RLA	LRA	MCC	FLA	FLA	FLA	Model	kW	Stages	Amps		
036 (3)	208-1-60	16.7	93.5	26	2.3	6.7	20	None	-	-	-	39.9	50
								E05	4	1	19.2	44.9	50
								E07	5.6	1	26.9	54.5	60
								E10	8	1	38.5	69	70
								E15	11.9	1	57.2	92.4	100
								E20	15.9	2	76.4	116.4	125
	230-1-60	16.7	93.5	26	2.3	6.7	20	None	-	-	-	40.2	50
								E05	5.3	1	22.1	48.5	50
								E07	7.5	1	31.3	60	60
								E10	10.6	1	44.2	76.1	80
								E15	15.9	1	66.3	103.8	110
								E20	21.2	2	88.3	131.3	150
	208-3-60	12.2	97.5	19	2.3	4.3	20	None	-	-	-	31.9	40
								E05	4	1	11.1	31.9	40
								E07	5.6	1	15.5	37.3	40
								E10	8	1	22.2	45.6	50
								E15	11.9	1	33	59.1	60
								E20	15.9	2	44.1	73	80
	230-3-60	12.2	97.5	19	2.3	4.3	20	None	-	-	-	32.2	40
								E05	5.3	1	12.7	33.8	40
								E07	7.5	1	18	40.4	45
								E10	10.6	1	25.5	49.8	50
								E15	15.9	1	38.2	65.6	70
								E20	21.2	2	51	81.6	90
	460-3-60	5.8	44.3	9	1.1	2.1	20	None	-	-	-	15.5	20
								E07	6.8	1	8.2	19.1	20
								E10	10.1	1	12.1	24	25
								E15	13.6	1	16.4	29.4	30
								E20	19.5	2	23.5	38.3	40
	575-3-60	4.5	27.1	7	1.1	1.9	20	None	-	-	-	12.4	15
								E10	10.6	1	10.2	20.1	25
								E15	15.9	1	15.3	26.5	30
								E20	21.2	2	20.4	32.9	35

KE036-072 standard indoor blower - with powered convenience outlet (Continued)

Size (ton)	Volt	Compressors (each)			OD fan motors (each)	Supply blower motor	Pwr conv outlet	Electric heat accessory				MCA[1] (A)	Max fuse[2]/ breaker[3] size (A)
		RLA	LRA	MCC	FLA	FLA	FLA	Model	kW	Stages	Amps		
048 (4)	208-1-60	22.4	126	35	2.3	6.7	20	None	-	-	-	47	60
								E05	4	1	19.2	47	60
								E07	5.6	1	26.9	54.5	60
								E10	8	1	38.5	69	70
								E15	11.9	1	57.2	92.4	100
								E20	15.9	2	76.4	116.4	125
	230-1-60	22.4	126	35	2.3	6.7	20	None	-	-	-	47.3	60
								E05	5.3	1	22.1	48.5	60
								E07	7.5	1	31.3	60	60
								E10	10.6	1	44.2	76.1	80
								E15	15.9	1	66.3	103.8	110
								E20	21.2	2	88.3	131.3	150
	208-3-60	12.8	120.4	20	2.3	4.3	20	None	-	-	-	32.6	45
								E05	4	1	11.1	32.6	45
								E07	5.6	1	15.5	37.3	45
								E10	8	1	22.2	45.6	50
								E15	11.9	1	33	59.1	60
								E20	15.9	2	44.1	73	80
	230-3-60	12.8	120.4	20	2.3	4.3	20	None	-	-	-	32.9	45
								E05	5.3	1	12.7	33.8	45
								E07	7.5	1	18	40.4	45
								E10	10.6	1	25.5	49.8	50
								E15	15.9	1	38.2	65.6	70
								E20	21.2	2	51	81.6	90
	460-3-60	6	49.4	9	1.1	2.1	20	None	-	-	-	15.7	20
								E07	6.8	1	8.2	19.1	20
								E10	10.1	1	12.1	24	25
								E15	13.6	1	16.4	29.4	30
								E20	19.5	2	23.5	38.3	40
	575-3-60	5.8	41	9	1	1.9	20	None	-	-	-	14	15
								E10	10.6	1	10.2	20.1	25
								E15	15.9	1	15.3	26.5	30
								E20	21.2	2	20.4	32.9	35

KE036-072 standard indoor blower - with powered convenience outlet (Continued)

Size (ton)	Volt	Compressors (each)			OD fan motors (each)	Supply blower motor	Pwr conv outlet	Electric heat accessory				MCA[1] (A)	Max fuse[2]/ breaker[3] size (A)
		RLA	LRA	MCC	FLA	FLA	FLA	Model	kW	Stages	Amps		
060 (5)	208-1-60	23.7	157	37	2.8	6.7	20	None	-	-	-	49.1	70
								E05	4	1	19.2	49.1	70
								E07	5.6	1	26.9	54.5	70
								E10	8	1	38.5	69	70
								E15	11.9	1	57.2	92.4	100
								E20	15.9	2	76.4	116.4	125
								E30	22.2	2	106.7	154.3	175
	230-1-60	23.7	157	37	2.8	6.7	20	None	-	-	-	49.1	70
								E05	5.3	1	22.1	49.1	70
								E07	7.5	1	31.3	60	70
								E10	10.6	1	44.2	76.1	80
								E15	15.9	1	66.3	103.8	110
								E20	21.2	2	88.3	131.3	150
								E30	29.6	2	123.3	175	175
	208-3-60	16	156.4	25	2.8	4.3	20	None	-	-	-	37.1	50
								E05	4	1	11.1	37.1	50
								E07	5.6	1	15.5	37.3	50
								E10	8	1	22.2	45.6	50
								E15	11.9	1	33	59.1	60
								E20	15.9	2	44.1	73	80
								E30	22.2	2	61.6	94.9	100
	230-3-60	16	156.4	25	2.8	4.3	20	None	-	-	-	37.1	50
								E05	5.3	1	12.7	37.1	50
								E07	7.5	1	18	40.4	50
								E10	10.6	1	25.5	49.8	50
								E15	15.9	1	38.2	65.6	70
								E20	21.2	2	51	81.6	90
								E30	29.6	2	71.2	106.9	110
	460-3-60	7.1	69	11	2.8	2.1	20	None	-	-	-	17.4	20
								E07	6.8	1	8.2	19.1	20
								E10	10.1	1	12.1	24	25
								E15	13.6	1	16.4	29.4	30
								E20	19.5	2	23.5	38.3	40
								E30	28.8	2	34.6	52.1	60
	575-3-60	6.4	47.8	10	2.8	1.9	20	None	-	-	-	15	20
								E10	10.6	1	10.2	20.1	25
								E15	15.9	1	15.3	26.5	30
								E20	21.2	2	20.4	32.9	35
								E30	30.4	2	29.3	44	45

KE036-072 standard indoor blower - with powered convenience outlet (Continued)

Size (ton)	Volt	Compressors (each)			OD fan motors (each)	Supply blower motor	Pwr conv outlet	Electric heat accessory				MCA[1] (A)	Max fuse[2]/ breaker[3] size (A)
		RLA	LRA	MCC	FLA	FLA	FLA	Model	kW	Stages	Amps		
072 (6)	208-3-60	19.2	162.3	30	4.4	9	20	None	-	-	-	47.4	60
								E05	4	1	11.1	47.4	60
								E07	5.6	1	15.5	47.4	60
								E10	8	1	22.2	51.5	60
								E15	11.9	1	33	65	70
								E20	15.9	2	44.1	78.9	80
								E30	22.2	2	61.6	100.8	110
	230-1-60	19.2	162.3	30	4.4	9	20	None	-	-	-	47.4	60
								E05	5.3	1	12.7	47.4	60
								E07	7.5	1	18	47.4	60
								E10	10.6	1	25.5	55.6	60
								E15	15.9	1	38.2	71.5	80
								E20	21.2	2	51	87.5	90
								E30	29.6	2	71.2	112.8	125
	460-3-60	9.1	70.8	14	2.4	4.6	20	None	-	-	-	23.4	30
								E07	6.8	1	8.2	23.4	30
								E10	10.1	1	12.1	27.1	30
								E15	13.6	1	16.4	32.5	35
								E20	19.5	2	23.5	41.4	45
								E30	28.8	2	34.6	55.3	60
	575-3-60	6.2	58.2	10	4.4	3.5	20	None	-	-	-	17.1	20
								E10	10.6	1	10.2	22.1	25
								E15	15.9	1	15.3	28.5	30
								E20	21.2	2	20.4	34.9	35
								E30	30.4	2	29.3	46	50

1. Minimum Circuit Ampacity.
2. Dual Element, Time Delay Type.
3. HACR type per NEC.

KE036-072 high-static indoor blower - without powered convenience outlet

Size (ton)	Volt	Compressors (each)			OD fan motors (each)	Supply blower motor	Pwr conv outlet	Electric heat accessory				MCA[1] (A)	Max fuse[2]/ breaker[3] size (A)
		RLA	LRA	MCC	FLA	FLA	FLA	Model	kW	Stages	Amps		
036 (3)	208-3-60	12.2	97.5	19	2.3	4.3		None	-	-	-	21.9	30
								E05	4	1	11.1	21.9	30
								E07	5.6	1	15.5	24.8	30
								E10	8	1	22.2	33.1	35
								E15	11.9	1	33	46.6	50
								E20	15.9	2	44.1	60.5	70
	230-3-60	12.2	97.5	19	2.3	4.3		None	-	-	-	22.2	30
								E05	5.3	1	12.7	22.2	30
								E07	7.5	1	18	27.9	30
								E10	10.6	1	25.5	37.3	40
								E15	15.9	1	38.2	53.1	60
								E20	21.2	2	51	69.1	70
	460-3-60	5.8	44.3	9	1.1	2.1		None	-	-	-	10.5	15
								E07	6.8	1	8.2	12.9	15
								E10	10.1	1	12.1	17.8	20
								E15	13.6	1	16.4	23.1	25
								E20	19.5	2	23.5	32	35
	575-3-60	4.5	27.1	7	1.1	1.9		None	-	-	-	8.4	15
								E10	10.6	1	10.2	15.1	20
								E15	15.9	1	15.3	21.5	25
								E20	21.2	2	20.4	27.9	30
048 (4)	208-3-60	12.8	120.4	20	2.3	4.3		None	-	-	-	22.6	30
								E05	4	1	11.1	22.6	30
								E07	5.6	1	15.5	24.8	35
								E10	8	1	22.2	33.1	35
								E15	11.9	1	33	46.6	50
								E20	15.9	2	44.1	60.5	70
	230-3-60	12.8	120.4	20	2.3	4.3		None	-	-	-	22.9	30
								E05	5.3	1	12.7	22.9	30
								E07	7.5	1	18	27.9	35
								E10	10.6	1	25.5	37.3	40
								E15	15.9	1	38.2	53.1	60
								E20	21.2	2	51	69.1	70
	460-3-60	6	49.4	9	1.1	2.1		None	-	-	-	10.7	15
								E07	6.8	1	8.2	12.9	15
								E10	10.1	1	12.1	17.8	20
								E15	13.6	1	16.4	23.1	25
								E20	19.5	2	23.5	32	35
	575-3-60	5.8	41	9	1	1.9		None	-	-	-	10	15
								E10	10.6	1	10.2	15.1	20
								E15	15.9	1	15.3	21.5	25
								E20	21.2	2	20.4	27.9	30

KE036-072 high-static indoor blower - without powered convenience outlet (Continued)

Size (ton)	Volt	Compressors (each)			OD fan motors (each)	Supply blower motor	Pwr conv outlet	Electric heat accessory				MCA[1] (A)	Max fuse[2]/ breaker[3] size (A)
		RLA	LRA	MCC	FLA	FLA	FLA	Model	kW	Stages	Amps		
060 (5)	208-3-60	16	156.4	25	2.8	6.8		None	-	-	-	29.6	40
								E05	4	1	11.1	29.6	40
								E07	5.6	1	15.5	29.6	40
								E10	8	1	22.2	36.3	45
								E15	11.9	1	33	49.8	50
								E20	15.9	2	44.1	63.6	70
								E30	22.2	2	61.6	85.5	90
	230-3-60	16	156.4	25	2.8	6.8		None	-	-	-	29.6	40
								E05	5.3	1	12.7	29.6	40
								E07	7.5	1	18	31	40
								E10	10.6	1	25.5	40.4	45
								E15	15.9	1	38.2	56.3	60
								E20	21.2	2	51	72.3	80
								E30	29.6	2	71.2	97.5	100
	460-3-60	7.1	69	11	2.8	3.15		None	-	-	-	13.5	20
								E07	6.8	1	8.2	14.2	20
								E10	10.1	1	12.1	19.1	20
								E15	13.6	1	16.4	24.4	25
								E20	19.5	2	23.5	33.3	35
								E30	28.8	2	34.6	47.2	50
	575-3-60	6.4	47.8	10	2.8	2.3		None	-	-	-	11.4	15
								E10	10.6	1	10.2	15.6	20
								E15	15.9	1	15.3	22	25
								E20	21.2	2	20.4	28.4	30
								E30	30.4	2	29.3	39.5	40
072 (6)	208-3-60	19.2	162.3	30	4.4	13.2		None	-	-	-	41.6	60
								E05	4	1	11.1	41.6	60
								E07	5.6	1	15.5	41.6	60
								E10	8	1	22.2	44.3	60
								E15	11.9	1	33	57.8	60
								E20	15.9	2	44.1	71.6	80
								E30	22.2	2	61.6	93.5	100
	230-3-60	19.2	162.3	30	4.4	13.2		None	-	-	-	41.6	60
								E05	5.3	1	12.7	41.6	60
								E07	7.5	1	18	41.6	60
								E10	10.6	1	25.5	48.4	60
								E15	15.9	1	38.2	64.3	70
								E20	21.2	2	51	80.3	90
								E30	29.6	2	71.2	105.5	110
	460-3-60	9.1	70.8	14	2.4	6.1		None	-	-	-	19.9	25
								E07	6.8	1	8.2	19.9	25
								E10	10.1	1	12.1	22.8	25
								E15	13.6	1	16.4	28.1	30
								E20	19.5	2	23.5	37	40
								E30	28.8	2	34.6	50.9	60
	575-3-60	6.2	58.2	10	4.4	4.9		None	-	-	-	14.5	20
								E10	10.6	1	10.2	18.9	20
								E15	15.9	1	15.3	25.3	30
								E20	21.2	2	20.4	31.6	35
								E30	30.4	2	29.3	42.8	45

1. Minimum Circuit Ampacity.
2. Dual Element, Time Delay Type.
3. HACR type per NEC.

KE036-072 high-static indoor blower - with powered convenience outlet

Size (ton)	Volt	Compressors (each)			OD fan motors (each)	Supply blower motor	Pwr conv outlet	Electric heat accessory				MCA[1] (A)	Max Fuse[2]/ Breaker[3] Size (A)
		RLA	LRA	MCC	FLA	FLA	FLA	Model	kW	Stages	Amps		
036 (3)	208-3-60	12.2	97.5	19	2.3	4.3	20	None	-	-	-	31.9	40
								E05	4	1	11.1	31.9	40
								E07	5.6	1	15.5	37.3	40
								E10	8	1	22.2	45.6	50
								E15	11.9	1	33	59.1	60
								E20	15.9	2	44.1	73	80
	230-3-60	12.2	97.5	19	2.3	4.3	20	None	-	-	-	32.2	40
								E05	5.3	1	12.7	33.8	40
								E07	7.5	1	18	40.4	45
								E10	10.6	1	25.5	49.8	50
								E15	15.9	1	38.2	65.6	70
								E20	21.2	2	51	81.6	90
	460-3-60	5.8	44.3	9	1.1	2.1	20	None	-	-	-	15.5	20
								E07	6.8	1	8.2	19.1	20
								E10	10.1	1	12.1	24	25
								E15	13.6	1	16.4	29.4	30
								E20	19.5	2	23.5	38.3	40
	575-3-60	4.5	27.1	7	1.1	1.9	20	None	-	-	-	12.4	15
								E10	10.6	1	10.2	20.1	25
								E15	15.9	1	15.3	26.5	30
								E20	21.2	2	20.4	32.9	35
048 (4)	208-3-60	12.8	120.4	20	2.3	4.3	20	None	-	-	-	32.6	45
								E05	4	1	11.1	32.6	45
								E07	5.6	1	15.5	37.3	45
								E10	8	1	22.2	45.6	50
								E15	11.9	1	33	59.1	60
								E20	15.9	2	44.1	73	80
	230-3-60	12.8	120.4	20	2.3	4.3	20	None	-	-	-	32.9	45
								E05	5.3	1	12.7	33.8	45
								E07	7.5	1	18	40.4	45
								E10	10.6	1	25.5	49.8	50
								E15	15.9	1	38.2	65.6	70
								E20	21.2	2	51	81.6	90
	460-3-60	6	49.4	9	1.1	v2.1	20	None	-	-	-	15.7	20
								E07	6.8	1	8.2	19.1	20
								E10	10.1	1	12.1	24	25
								E15	13.6	1	16.4	29.4	30
								E20	19.5	2	23.5	38.3	40
	575-3-60	5.8	41	9	1	1.9	20	None	-	-	-	14	15
								E10	10.6	1	10.2	20.1	25
								E15	15.9	1	15.3	26.5	30
								E20	21.2	2	20.4	32.9	35

KE036-072 high-static indoor blower - with powered convenience outlet

Size (ton)	Volt	Compressors (each)			OD fan motors (each)	Supply blower motor	Pwr conv outlet	Electric heat accessory				MCA[1] (A)	Max Fuse[2]/ Breaker[3] Size (A)
		RLA	LRA	MCC	FLA	FLA	FLA	Model	kW	Stages	Amps		
060 (5)	208-3-60	16	156.4	25	2.8	6.8	20	None	-	-	-	39.6	50
								E05	4	1	11.1	39.6	50
								E07	5.6	1	15.5	40.4	50
								E10	8	1	22.2	48.8	50
								E15	11.9	1	33	62.3	70
								E20	15.9	2	44.1	76.1	80
								E30	22.2	2	61.6	98	100
	230-3-60	16	156.4	25	2.8	6.8	20	None	-	-	-	39.6	50
								E05	5.3	1	12.7	39.6	50
								E07	7.5	1	18	43.5	50
								E10	10.6	1	25.5	52.9	60
								E15	15.9	1	38.2	68.8	70
								E20	21.2	2	51	84.8	90
								E30	29.6	2	71.2	110	110
	460-3-60	7.1	69	11	2.8	3.15	20	None	-	-	-	18.5	25
								E07	6.8	1	8.2	20.4	25
								E10	10.1	1	12.1	25.3	30
								E15	13.6	1	16.4	30.7	35
								E20	19.5	2	23.5	39.6	40
								E30	28.8	2	34.6	53.4	60
	575-3-60	6.4	47.8	10	2.8	2.3	20	None	-	-	-	15.4	20
								E10	10.6	1	10.2	20.6	25
								E15	15.9	1	15.3	27	30
								E20	21.2	2	20.4	33.4	35
								E30	30.4	2	29.3	44.5	45
072 (6)	208-3-60	19.2	162.3	30	4.4	13.2	20	None	-	-	-	51.6	70
								E05	4	1	11.1	51.6	70
								E07	5.6	1	15.5	51.6	70
								E10	8	1	22.2	56.8	70
								E15	11.9	1	33	70.3	80
								E20	15.9	2	44.1	84.1	90
								E30	22.2	2	61.6	106	110
	230-3-60	19.2	162.3	30	4.4	13.2	20	None	-	-	-	51.6	70
								E05	5.3	1	12.7	51.6	70
								E07	7.5	1	18	51.6	70
								E10	10.6	1	25.5	60.9	70
								E15	15.9	1	38.2	76.8	80
								E20	21.2	2	51	92.8	100
								E30	29.6	2	71.2	118	125
	460-3-60	9.1	70.8	14	2.4	6.1	20	None	-	-	-	24.9	30
								E07	6.8	1	8.2	24.9	30
								E10	10.1	1	12.1	29	30
								E15	13.6	1	16.4	34.4	35
								E20	19.5	2	23.5	43.3	45
								E30	28.8	2	34.6	57.1	60
	575-3-60	6.2	58.2	10	4.4	4.9	20	None	-	-	-	18.5	20
								E10	10.6	1	10.2	23.9	25
								E15	15.9	1	15.3	30.3	35
								E20	21.2	2	20.4	36.6	40
								E30	30.4	2	29.3	47.8	50

1. Minimum Circuit Ampacity.
2. Dual element, time delay type.
3. HACR type per NEC.

Table 8: Electrical data: single-phase gas heat, belt drive

KE036-060 - without powered convenience outlet (belt drive single phase gas heat)

Size (ton)	Volt	Compressors (each)			OD fan motors (each)	Supply blower motor	Pwr conv outlet	Electric heat accessory				MCA[1] (A)	Max fuse[2]/ breaker[3] size (A)
		RLA	LRA	MCC	FLA	FLA	FLA	Model	kW	Stages	Amps		
036 (3)	208-1-60	16.7	93.5	26	2.3	16.5		None	-	-	-	39.7	50
	230-1-60	16.7	93.5	26	2.3	16.5		None	-	-	-	40.0	50
048 (4)	208-1-60	22.4	126	35	2.3	16.5		None	-	-	-	46.8	60
	230-1-60	22.4	126	35	2.3	16.5		None	-	-	-	47.1	60
060 (5)	208-1-60	23.7	157	37	2.8	16.5		None	-	-	-	48.9	70
	230-1-60	23.7	157	37	2.8	16.5		None	-	-	-	48.9	70

1. Minimum Circuit Ampacity.
2. Dual element, time delay type.
3. HACR type per NEC.

KE036-060 - with powered convenience outlet (belt drive single phase gas heat)

Size (ton)	Volt	Compressors (each)			OD fan motors (each)	Supply blower motor	Pwr conv outlet	Electric heat accessory				MCA[1] (amps)	Max fuse[2]/ breaker[3] size (amps)
		RLA	LRA	MCC	FLA	FLA	FLA	Model	kW	Stages	Amps		
036 (3)	208-1-60	16.7	93.5	26	2.3	16.5	20	None	-	-	-	49.7	60
	230-1-60	16.7	93.5	26	2.3	16.5	20	None	-	-	-	50.0	60
048 (4)	208-1-60	22.4	126	35	2.3	16.5	20	None	-	-	-	56.8	70
	230-1-60	22.4	126	35	2.3	16.5	20	None	-	-	-	57.1	70
060 (5)	208-1-60	23.7	157	37	2.8	16.5	20	None	-	-	-	58.9	80
	230-1-60	23.7	157	37	2.8	16.5	20	None	-	-	-	58.9	80

1. Minimum Circuit Ampacity.
2. Dual element, time delay type.
3. HACR type per NEC.

Table 9: KE036-072 Physical data

Component	Models							
	KE036		KE048		KE060		KE072	
Nominal tonnage	**3**		**4**		**5**		**6**	
ARI cooling performance								
Gross Capacity @ AHRI A point (Btu)	37,000		51,000		59,500		72,500	
AHRI net capacity (Btu)	35,400		49,000		57,000		69,000	
EER	-		-		-		11.2	
EER2	11.4		11.2		11.4		-	
SEER2	13.4		13.4		13.4		-	
IEER IntelliSpeed	-		-		-		16.0	
CFM	1200		1450		1600		2000	
System power (KW)	3.1		4.2		5.0		6.0	
Refrigerant type	R-454B		R-454B		R-454B		R-454B	
Refrigerant charge (lb-oz)	-		-		-		-	
System 1	3-10		4-4		5-4		5-14	
AHRI heating performance								
Heating model	H05	H10	H07	H12	H10	H12	H10	H12
Heat input (K Btu)	50	100	75	125	100	125	100	125
Heat output (K Btu)	40	80	60	100	80	100	80	100
AFUE% (Single Phase Only)	81	81	81	81	81	81	-	-
FER compliant direct drive (single phase gas heat only)3	Yes	Yes	Yes	Yes	Yes	Yes	-	-
FER compliant belt drive (single phase gas heat only)3	Yes	Yes	Yes	Yes	No	Yes	-	-
Steady state efficiency (%) (3 phase only)	80	80	80	80	80	80	80.0	80.0
No. burners	2	4	3	5	4	5	4	5
No. stages	1	1	1	1	1	1	1	1
Temperature rise range (ºF)	15-45	45-75	25-70	45-75	25-55	35-75	25-55	30-75
Gas limit setting (ºF) - direct drive	240	190	210	165	170	165	-	-
Gas limit setting (ºF) - belt drive	240	210	240	210	210	210	210	210
Gas piping connection (in.)	1/2	1/2	1/2	1/2	1/2	1/2	1/2	1/2
Dimensions (in.)								
Length	82 1/4		82 1/4		82 1/4		82 1/4	
Width	44 7/8		44 7/8		44 7/8		44 7/8	
Height	32 5/8		32 5/8		32 5/8		32 5/8	
Operating weight (lb)	470		598		632		665	
Compressors	-		-		-		-	
Type	Scroll		Scroll		Scroll		2-stage scroll	
Quantity	1		1		1		1	
Unit capacity steps (%)	100		100		100		1	
Condenser coil data	-		-		-		100	
Face area (sq ft)	16.3		16.3		16.3		-	
Rows	1		1		1		16.3	
Fins per in.	23		23		23		1	
Tube diameter (in.)	0.71 / 18		0.71 / 18		0.81 / 20.6		1.00 / 25.4	
Circuitry type	2-pass Microchannel		2-pass Microchannel		2-pass Microchannel		2-pass Microchannel	

Component	Models							
	KE036		KE048		KE060		KE072	
Nominal tonnage	**3**		**4**		**5**		**6**	
Evaporator coil data	-		-		-		-	
Face area (sq ft)	5.06		5.06		5.06		5.01	
Rows	3		4		4		4	
Fins per in.	13		13		13		13	
Tube diameter	0.375		0.375		0.375		0.375	
Circuitry type	Intertwined		Intertwined		Intertwined		Intertwined	
Refrigerant control	Orifice		Orifice		TXV		TXV	
Condenser fan data	-		-		-		-	
Quantity of fans	1		1		1		1	
Fan diameter (in.)	24		24		24		24	
Type	Prop		Prop		Prop		Prop	
Drive type	Direct		Direct		Direct		Direct	
Quantity of motors	1		1		1		1	
Motor HP each	1/2		1/2		1/34		1/24	
No. speeds	1		1		1		2	
RPM	1090		1090		1100		900 / 1150	
CFM	4000		4000		4200		3300 / 4200	
Belt drive evap fan data	-		-		-		-	
Quantity	1		1		1		1	
Fan size (in.)	11 x 10		11 x 10		11 x 10		11 x 10	
Type	Centrifugal		Centrifugal		Centrifugal		Centrifugal	
Motor sheave	1VL44	1VP56	1VL44	1VP56	1VL44	1VP56	VL44	1VP56
Blower sheave	AK64	AK66	AK56	AK61	AK56	AK56	AK56	AK56
Belt	A37	A39	A36	A38	A36	A38	A36	A38
Motor HP each	1-1/2	1-1/2	1-1/2	1-1/2	1-1/2	2	1-1/2	3
RPM	1740		1740		1740		1740	
Frame size	56		56		56		56	
Direct drive evap fan data5								
Quantity	1		1		1			
Fan size (in.)	11 x 10		11 x 10		11 x 10			
Type	Centrifugal		Centrifugal		Centrifugal			
Motor HP each	3/4		3/4		1			
RPM	1050		1050		1050			
Filters								
15 in. x 20 in. x 1 in. or 2 in.	2		2		2		2	
14 in. x 25 in. x 1 in. or 2 in.	1		1		1		1	

Field installed electric heat

The field installed heaters are wired for single point power supply. Power supply wiring need only be brought into the contactor and thermostat wiring to the low voltage terminal strip located in the upper portion of the unit control box.

These CSA approved heaters are located within the central compartment of the unit with the heater elements extending in to the supply air chamber.

Fuses are supplied, where required, by the factory. Some kW sizes require fuses and others do not. Refer to Table 9 for minimum CFM limitations and to Table 7 for electrical data.

Table 10: Electric heat minimum supply air

Size (ton)	Voltage	Minimum supply air (CFM)					
		Heater kW					
		5	7	10	15	20	30
036 (3.0)	208/230-1-60	900	900	900	900	900	—
	208/230-3-60	900	900	900	900	900	—
	460-3-60	—	900	900	900	900	—
	600-3-60	—	—	900	900	900	—
048 (4.0)	208/230-1-60	1,200	1,200	1,200	1,200	1,200	—
	208/230-3-60	1,200	1,200	1,200	1,200	1,200	—
	460-3-60	—	1,200	1,200	1,200	1,200	—
	600-3-60	—	—	1,200	1,200	1,200	—
060 (5.0)	208/230-1-60	1,500	1,500	1,500	1,500	1,500	1,500
	208/230-3-60	1,500	1,500	1,500	1,500	1,500	1,500
	460-3-60	—	1,500	1,500	1,500	1,500	1,500
	600-3-60	—	—	1,500	1,500	1,500	1,500
072 (6.0)	208/230-3-60	1,500	1,500	1,500	1,500	1,500	1,500
	460-3-60	—	1,500	1,500	1,500	1,500	1,500
	600-3-60	—	—	1,500	1,500	1,500	1,500

Optional gas heat

These gas-fired heaters have aluminized-steel or optional stainless steel, tubular heat exchangers with spark ignition with proven pilot.

All gas heaters are shipped from the factory equipped for natural gas use. See Gas Heat Application Data Table.

For natural gas heating installations in locations requiring low Nox emissions, Accessory model 1LN0406 must be used.

Table 11: Gas heat application data

Gas heat option	Input capacity (MBH)	Output capacity (MBH)	Available on models	Gas rate[1] (Ft^3/hr)	Temperature rise °F at full input[2]	
					Min.	Max.
H05	50	40	3 ton	47	15	45
H07	75	60	4 ton	70	25	70
H10	100	80	3/5/6 ton	93	45/25	75/55
H12	125	100	4/5/6 ton	116	45/35	75/75

NOTE: Gas Heaters are shipped available for natural gas, but can be converted to L.P. with Kit Model No. 1NP0440. All furnaces meet the latest California seasonal efficiency requirements.

1. Based on 1075 Btu/ft^3.
2. The air flow must be adjusted to obtain a temperature rise within the range shown.

Gas piping

Proper sizing of gas piping depends on the cubic feet per hour of gas flow required, specific gravity of the gas and the length of run. *National Fuel Gas Code Z223.1 (in U.S.A.)* or the current *Gas Installation Codes CSA-B149.1 (in Canada)* should be followed in all cases unless superseded by local codes or gas utility requirements. Refer to the Pipe Sizing Table 12. The heating value of the gas may differ with locality. The value should be checked with the local gas utility.

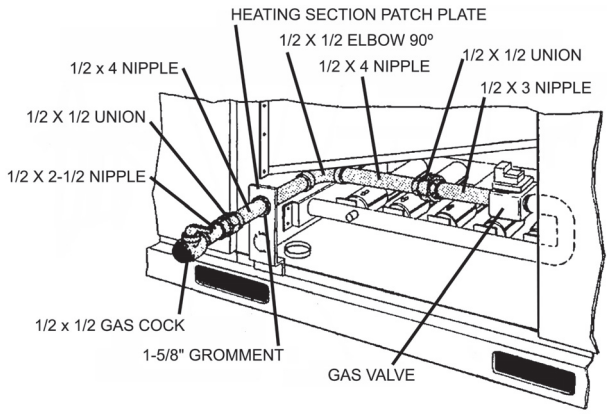

Figure 15: Side entry gas piping

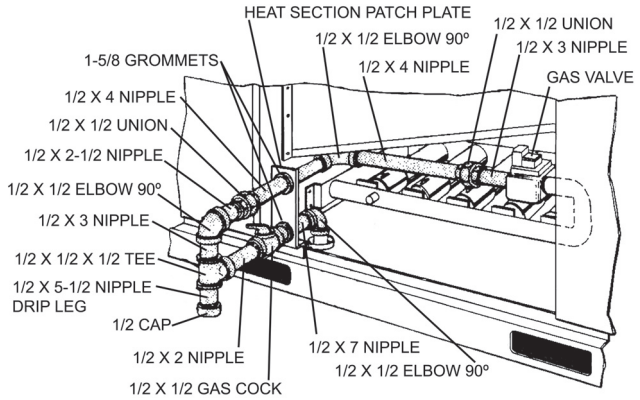

Figure 16: Bottom entry gas piping

Table 12: Gas pipe sizing - capacity of pipe

Length of pipe (ft)	Nominal iron pipe size		
	3/4 in.	1 in.	1-1/4 in.
10	278	520	1050
20	190	350	730
30	152	285	590
40	130	245	500
50	115	215	440
60	105	195	400
70	96	180	370
80	90	170	350
90	84	160	320
100	79	150	305

Note: Maximum capacity of pipe in cubic feet of gas per hour based upon a pressure drop of 0.3 inch W.C. and 0.6 specific gravity gas.

Note: There may be a local gas utility requirement specifying a minimum diameter for gas piping. All units require a 1/2 inch pipe connection at the entrance fitting. Line should not be sized smaller than the entrance fitting size.

Gas connection

The gas supply line can be routed within the space and roof curb, exiting through the unit's basepan. Refer to Figure 6 for the gas piping inlet locations. Typical supply piping arrangements are shown in Figures 15 and 16. All pipe nipples, fittings, and the gas cock are field supplied or may be purchased in Ducted Systems accessory kit #1GP0401.

Gas piping recommendations:

1. A drip leg and a ground joint union must be installed in the gas piping.
2. Where required by local codes, a manual shut-off valve must be installed outside of the unit.
3. Use wrought iron or steel pipe for all gas lines. Pipe dope should be applied sparingly to male threads only.

⚠WARNING

Natural gas may contain some propane. Propane is an excellent solvent and will quickly dissolve white lead and most standard commercial compounds. A special pipe dope must be used when assembling wrought iron or steel pipe. Shellac based compounds such as Gaskolac or Stalastic, and compounds such as Rectorseal #5, Clydes's or John Crane may be used.

4. All piping should be cleaned of dirt and scale by hammering on the outside of the pipe and blowing out loose particles. Before initial start-up, be sure that all gas lines external to the unit have been purged of air.
5. The gas supply should be a separate line and installed in accordance with all safety codes as prescribed under *Limitations*.
6. A 1/8 in. NPT plugged tapping, accessible for test gage connection, must be installed immediately upstream of the gas supply connection to the unit.
7. After the gas connections have been completed, open the main shut-off valve admitting *normal gas pressure* to the mains. *Check all joints for leaks with soap solution or other material suitable for the purpose.* **Never use a flame.**

⚠WARNING

FIRE OR EXPLOSION HAZARD

Failure to follow the safety warning exactly could result in serious injury, death or property damage.

Never test for gas leaks with an open flame. use a commercially available soap solution made specifically for the detection of leaks to check all connections. A fire or explosion may result causing property damage, personal injury or loss of life.

⚠ CAUTION

The furnace and its individual shut-off valve must be disconnected from the gas supply piping system during any pressure testing at pressures in excess of 1/2 PSIG.

Pressures greater than 1/2 PSIG will cause gas valve damage resulting in a hazardous condition. If it is subjected to a pressure greater than 1/2 PSIG, the gas valve must be replaced.

The furnace must be isolated from the gas supply piping system by closing its individual manual shut-off valve during any pressure testing of the gas supply piping system at test pressures equal to or less than 1/2 PSIG.

⚠WARNING

Threaded joints should be coated with a sealing compound that is resistant to the action of liquefied petroleum gases. **Do not use Teflon tape.**

LP units, tanks and piping

All gas heat units are shipped from the factory equipped for natural gas use only. The unit may be converted in the field for use with LP gas with accessory kit model number 1NP0440.

All LP gas equipment must conform to the safety standards of the National Fire Protection Association.

For satisfactory operation, adequate LP gas pressure must be provided at the unit manifold under full load. Maintaining proper gas pressure depends on three main factors:

1. The vaporization rate which depends on the temperature of the liquid and the wetted surface area of the containers.
2. The correct pressure regulation. Two-stage regulation is recommended.
3. The pressure drop in the lines between regulators and between the second stage regulator and the appliance. Pipe size required will depend on the length of the pipe run and the total load of all appliances.

Complete information regarding tank sizing for vaporization, recommended regulator settings, and pipe sizing is available from most regulator manufacturers and LP gas suppliers.

⚠WARNING

LP gas is an excellent solvent and will quickly dissolve white lead and most standard commercial compounds. A special pipe dope must be used when assembling wrought iron or steel pipe for LP. Shellac base compounds such as Gaskolac or Stalastic, and compounds such as Rectorseal #5, Clyde's, or John Crane may be used.

Check all connections for leaks when piping is completed using a soap solution. **Never use a flame.**

⚠WARNING

FIRE OR EXPLOSION HAZARD

Failure to follow the safety warning exactly could result in serious injury, death or property damage.

Never test for gas leaks with an open flame. use a commercially available soap solution made specifically for the detection of leaks to check all connections. A fire or explosion may result causing property damage, personal injury or loss of life.

Vent and combustion air hoods

The vent hood and combustion air hood (with screens) are shipped attached to the blower housing in the blower compartment. These hoods must be installed to assure proper unit function. All hoods must be fastened to the outside of the gas heat access panel with the screws provided in the bag also attached to the blower housing.

The screen for the combustion air intake hood is secured to the inside of the access panel opening with three fasteners and the screws used for mounting the hood to the panel. The top flange of this hood slips in under the top of the access panel opening when installing. See Vent and Combustion Air Hood Figure 17.

The vent hood is installed by inserting the top flange of the hood into the slotted opening in the access panel and securing in place.

The products of combustion are discharged horizontally through this screened, hooded vent opening on the gas heat access panel.

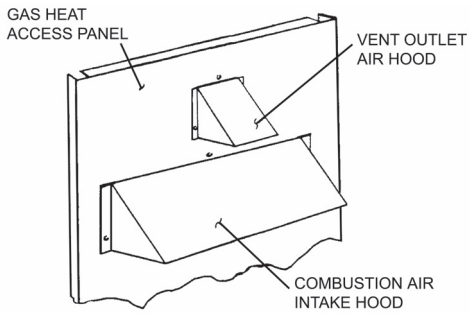

Figure 17: Vent and combustion air hood

⚠ CAUTION

An adhesive backed label is provided over the outside of the combustion air inlet opening to prevent moisture from entering the unit, which could cause damage to electrical components. Allow this closure label to remain in place until the combustion air hood is to be installed.

Options/accessories

Electric Heat

Electric heaters are available as field-installed accessories. Refer to electric heat instructions for installation. These heaters mount in the heat compartment with the heating elements extending into the supply air chamber. All electric heaters are fused and intended for use with single point power supply.

Economizer/motorized damper and rain hood

The instructions for the optional economizer/field installed motorized damper rain hood can be found in form 5004617 (Smart Equipment). Use these instructions when field assembling an economizer rain hood onto a unit. The outdoor and return air dampers, the damper actuator, the damper linkage, the outdoor and return air divider baffles, and all the control sensors are factory mounted as part of the “Factory installed” economizer options.

Power exhaust/barometric relief damper and rain hood

The instructions for the power exhaust/barometric relief damper and rain hood can be found in form 1200060.

All of the components, including the dampers, hardware, and mounting instructions are shipped in a single package external from the unit and must be field assembled and installed.

Power exhaust is only available as a field installed accessory.

RRS economizer interface overview

Units with Simplicity Lite Controls will have a field installed (RRS) Economizer Kit Offered.

This section describes how to use the Economizer’s user interface for:

- Keypad and menu navigation
- Settings and parameter changes
- Menu structure and selection

User interface

The user interface consists of an LCD display and a 4-button keypad on the front of the economizer module.

Figure 18: RRS economizer LCD and keypad layout.

Keypad

The 4 navigation buttons illustrated in Figure 18 are used to scroll through the menus and menu items, select menu items, and to change parameter and configuration settings.

Using the keypad with menus

To use the keypad when working with menus:

- Press the ↵ (enter) button navigates to the next level.
- Each press of the ^ (scroll up) and v (scroll down) buttons move the > cursor.
- Each press of the esc (cancel) button navigates to the previous level.

Level 0 of the parameter menu, where either a blank screen is shown or active Alarm(s) are shown in 20-second intervals, is displayed following:

- The boot-up sequence
- 45 minutes of menu navigation inactivity
- Multiple presses of the esc (cancel) button

From Level 0 of the parameter menu, navigation to Level 1 of the menu is done with a press of the ^ (scroll up), v (scroll down) or ↵ (enter) button.

The LEDs at the center-left of the RRS Economizer Controller indicate:

- POWER (green)
  - Lit whenever 24 V AC power is present to the RRS Economizer Controller C and R pins
- FAULT (red)
  - Lit, then flashes during the boot-up sequence of the RRS Economizer Controller
  - Not lit when there are no Alarms active
  - Double-flash/pause continuously when Alarms are active
- SA BUS (green)

- Will not be lit

Menu structure

The top level menus are:

- STATUS
- ALARMS
- SUMMARY → ECONOMIKER, POWER EXHAUST, COMPRESSOR
- COMMISSION
- CONTROLLER SETTINGS
- UPDATE
- DETAILS
- SELF TEST
- VIEW RESULTS

Note: Your menu parameters will be different depending on your configuration. Refer to the RRS Economizer Control Quick Start Guide P/N 5292230-USG available from your equipment dealer or distributor.

RRS economizer controller parameter menu functions

There are several conditional parameters within the menu. Parameters for temperature, humidity and CO_2 inputs are only shown in the menu once sensor presence has been detected. Parameters associated with a function are only shown in the menu when that function is enabled.

Smart Equipment Economizer sequences

Units with the Smart Equipment Control will have a factory option.

Several functions can drive the economizer, including: minimum position, free cooling, economizer loading, and minimum outdoor air supply.

Economizer minimum position

The economizer minimum position is set during occupied mode when outside air is not suitable for free cooling. The position of the damper is set proportionally between the "Economizer Minimum Position and the Economizer Minimum Position Low Speed Fan" set points, in relationship to the VFD output percentage. On a constant volume single speed supply fan system both set-points should be set to the same value.

Free cooling

Four types of free cooling options are available: dry bulb changeover, single enthalpy, dual enthalpy changeover, and Auto.

Dry bulb changeover

For dry bulb economizer operation, the outside air is suitable for free cooling if the outside air temperature is 1°F below the Economizer OAT Enable Setpoint **and** 1°F below the Return Air Temperature.

Free cooling is no longer available if the outside air temperature rises above **either** the Economizer OAT Enable setpoint **or** the return air temperature.

Single enthalpy changeover

For single enthalpy economizer operation, the outside air is suitable for free cooling if the outside air enthalpy is at least 1 BTU/lb below the Economizer Outside Air Enthalpy Setpoint **and** the outside air temperature is no greater than the RAT plus 9°F.

If the outside air temperature rises above the RAT plus 10°F, free cooling is no longer available. The outside air temperature must drop to no greater than RAT plus 9°F to enter free cooling again.

Free cooling is no longer available if the outside air enthalpy rises above the Economizer Outside Air Enthalpy Setpoint.

Dual enthalpy changeover

For dual enthalpy economizer operation, the outside air enthalpy must be lower than the return air enthalpy by 1 btu/lb AND the outside air temperature is no greater than the RAT plus 9°F.

Auto

The control determines the type of free cooling changeover based on which sensors are present and reliable. Conditions include:

- Return and outside air dry bulb = dry bulb changeover
- Return and outside air dry bulb and outside air humidity = single enthalpy
- Return and outside air dry bulb and return and outside air humidity = dual enthalpy
- If either the return or outside air dry bulb sensors are unreliable, free cooling is not available

Free cooling operation

When the control determines that the outside air is suitable, the first stage of cooling will always be free cooling.

Thermostat

In free cooling, with a thermostat input to Y1, the dampers modulate to control the supply air temperature to the Economizer Setpoint +/- 1°F (default 55°F).

If the thermostat provides an input to Y2 **and** the parameter Compressors Off in Free Cooling is turned OFF a compressor output energizes. The economizer dampers continue to modulate to control the supply air temperature to the Economizer Setpoint.

If the supply air temperature cannot be maintained within 5°F of the economizer setpoint, the first stage compressor (C1) will be turned on. Second stage compressor (C2) will be added as needed to keep the supply air temperature within the 5°F of the economizer setpoint.

Sensor

In free cooling, with a demand from the zone/return sensor for the first stage of cooling, the dampers modulate to control the supply air temperature to the Economizer Setpoint +/- 1°F.

If the economizer output is at 100% **and** the SAT is greater than the Economizer setpoint + 1°F, the control starts a 12-minute timer to energize a compressor output.

If at any time the economizer output drops below 100% the timer stops and resets when the economizer output returns to 100%.

Once a compressor output is turned ON, the economizer dampers continue to modulate to control the supply air temperature to the Economizer Setpoint.

At no time will a compressor output be turned ON if the economizer output is less than 100%, even if the differential between zone or return temperature and the current cooling setpoint is great enough to demand more than one stage of cooling.

If the economizer output goes to minimum position **and** the SAT is less than Economizer Setpoint -1°F, the control starts a 12-minute timer to de-energize a compressor output.

If at any time the economizer output goes above the minimum position the timer stops and resets when the economizer output returns to minimum position.

If the demand for cooling from the space/return is satisfied, the economizer output will modulate to minimum position and the compressor outputs will be de-energized as long as their minimum run timers have expired.

Power exhaust

Setpoints

a. Economizer Enable ON
b. Power Exhaust Enable ON
c. Modulating Power Exhaust OFF
d. Exhaust VFD Installed OFF
e. Building Pressure Sensor Enabled OFF
f. Econo Damper Position For Exh Fan ON Percent
g. Econo Damper Position For Exh Fan OFF Percent

Inputs

No inputs are present for non-modulating power exhaust.

Outputs

a. 2-10 VDC from ECON on Economizer Expansion module
b. 24 VAC from EX-FAN to energize exhaust fan on Economizer Expansion module

Operation

Operation details include:

a. Compares economizer output to the economizer damper position for exhaust fan ON and OFF.
b. Energizes exhaust fan when economizer output is above economizer damper position for exhaust fan ON.
c. De-energizes exhaust fan when economizer output is below the economizer damper position for exhaust fan OFF

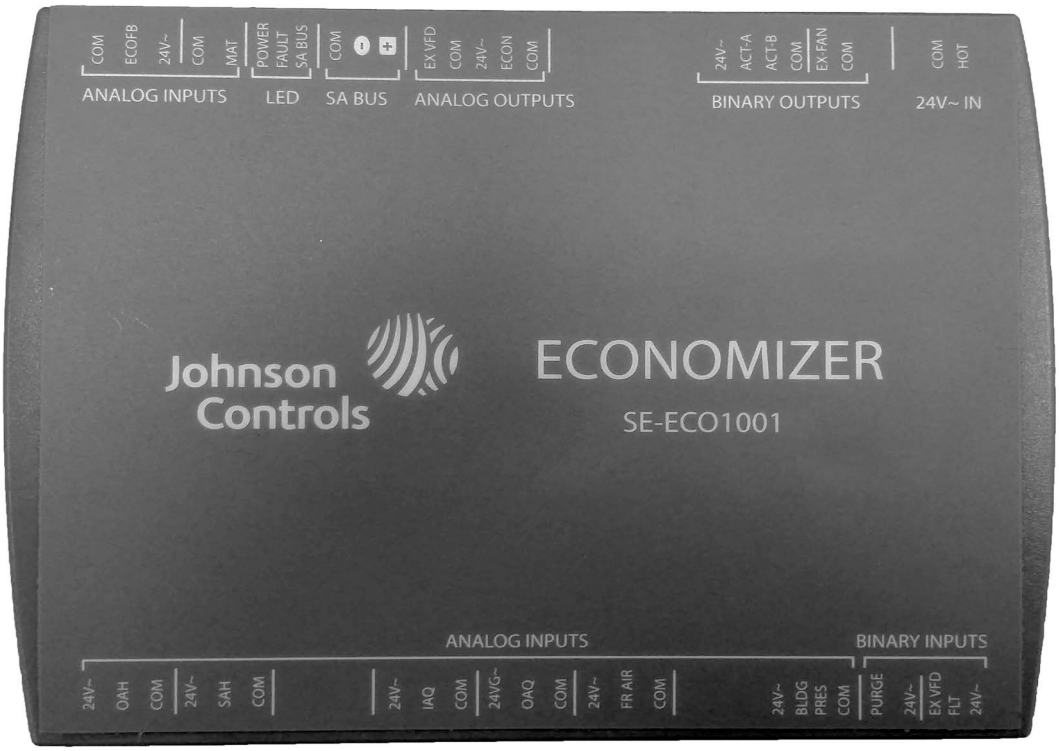

Figure 19: SE-ECO1001-0 Economizer Controller

Table 13: Smart Equipment Economizer Board details

Board label	Cover label	Description	Function and comments
		Directional orientation: viewed with the center text of the cover label upright	
		ANALOG INPUTS Terminal at left on upper edge of economizer board	
C	COM	24 VAC common/0-10 VDC negative for economizer actuator position feedback	Connects through circuit trace to 24V~ IN pin COM
IN2	ECOFB	0-10 VDC positive input from Economizer actuator position Feedback	EconDampPos parameter reports input status (0-100%). Used to meet Cali. Title 24 requirements for economizer actuator position feedback
R	24V~	24 VAC hot supplied for economizer actuator position feedback	Connects through circuit trace to 24V~ IN pin HOT
C	COM	Mixed Air Temperature sensor input from 10KΩ @ 77°F, Type III negative temperature coefficient thermistor	MAT parameter reports input status (°F/°C), 3.65 VDC reading MAT (+) to COM (−) with open circuit. Read-only use in current control revision.
IN1	MAT		
		LEDs at left on upper edge of economizer board	
POWER	POWER	Green UCB power indicator	Lit indicates 24 VAC is present at 24V~ IN COM and HOT pins
FAULT	FAULT	Red networking error and firmware error indicator	1/10th second on/off flashing indicates a networking error (polarity, addressing, etc.) or a firmware error (likely correctable with re-loading from USB flash drive)
SA BUS	SA BUS	Green UCB SA bus communication transmission indicator	Lit/flickering indicates UCB-to-economizer board SA bus communication is currently active, off indicates the economizer board is awaiting SA bus communication

Table 13: Smart Equipment Economizer Board details (Continued)

Board label	Cover label	Description	Function and comments
		SA BUS[1] Pin connections at left on upper edge of economizer board	
C	COM	Common for SA BUS power and communication circuits	EconCtrlr parameter reports UCB-to-economizer board SA bus communication status. Negative of the SA BUS communication circuit to the UCB. Through the unit wiring harness, may continue on to the 4-stage board and/or fault detection & diagnostics board
–	–	Communication for SA BUS devices	EconCtrlr parameter reports UCB-to-economizer board SA BUS communication status. Positive of the VDC (typically, a fluctuating 1.5 to 3.5 volts reading to C; at least 0.25 volts lower than +) SA BUS communication circuit to the UCB. Through the unit wiring harness, may continue on to the 4-stage board and/or fault detection & diagnostics board
+	+	Communication for SA BUS devices	EconCtrlr parameter reports UCB-to-economizer board SA BUS communication status. Positive of the VDC (typically, a fluctuating 1.5 to 3.5 volts reading to C; at least 0.25 volts higher than –) SA BUS communication circuit to the UCB. Through the unit wiring harness, may continue on to the 4-stage board and/or fault detection & diagnostics board
		ANALOG OUTPUTS Pin at center on upper edge of economizer board	
J4	EX VFD	2-10 VDC positive output for the modulating power Exhaust fan Variable Frequency Drive/ discharge damper modulating power exhaust actuator	ExFanVFD parameter reports output status (0-100%) when ExFType selection is Variable Frequency Fan; EAD-O parameter reports output status (0-100%) when ExFType selection is Modulating Damper. Used to ramp the power exhaust fan VFD/ position the discharge damper actuator.
	COM	24 VAC common/0-10 VDC negative for the power exhaust variable frequency drive/ discharge damper modulating power exhaust actuator	Connects through circuit trace to 24V~ IN pin COM
	24V~	24 VAC hot supplied for the discharge damper modulating power exhaust actuator and economizer actuator	Connects through circuit trace to 24V~ IN pin HOT
	ECON	2-10 VDC output for the Economizer actuator	Econ parameter reports output status (0-100%). Used to position the economizer actuator for minimum position, free cooling, demand ventilation, cooling economizer loading and purge functions
	COM	24 VAC common/0-10 VDC negative for economizer actuator	Connects through circuit trace to 24V~ IN pin COM

Table 13: Smart Equipment Economizer Board details (Continued)

Board label	Cover label	Description	Function and comments
		BINARY OUTPUTS Pin at right on upper edge of economizer board	
J3	24V~	24 VAC hot supplied for an incremental (floating control) economizer actuator	Connects through circuit trace to 24V~ IN pin HOT
	ACT-A	24 VAC hot outputs to position an incremental (floating control) economizer actuator	Unused in current control revision
	ACT-B	24 VAC return	Unused in current control revision
	COM	24 VAC common for an incremental (floating control) economizer actuator	Connects through circuit trace to 24V~ IN pin COM
	EX-FAN	24 VAC hot output to energize power exhaust fan contactor coil/VFD enable relay coil	ExFan parameter reports output status (Off-On) when ExFType selection is Non-Modulating, Modulating Damper or Variable Frequency Fan. Used to turn on/enable the power exhaust fan motor.
	COM	24 VAC common/0-10 VDC negative for economizer actuator	Connects through circuit trace to 24V~ IN pin COM
		24V~ IN Pin connections at right on upper edge of economizer board	
C	COM	24 VAC transformer Common referenced to cabinet ground	24 VAC common connection to power the economizer board. Connects through circuit traces to C/COM terminals and pins distributed on the economizer board.
R	HOT	24 VAC transformer HOT	24 VAC hot connection to power the economizer board. Connects through circuit traces to R/24V~ terminals and pins distributed on the economizer board.
		ANALOG INPUTS Terminal on lower edge of economizer board	
R	24V~	24 VAC hot supplied for the outdoor air humidity sensor	Connects through circuit trace to 24V~ IN pin HOT
IN3	OAH	0-10 VDC positive input from the Outdoor Air Humidity sensor	OAH parameter reports input status (0-100%H). Used in outdoor air enthalpy calculation for dual enthalpy economizer free cooling changeover.
C	COM	24 VAC common/0-10 VDC negative for the outdoor air humidity sensor	Connects through circuit trace to 24V~ IN pin COM
R	24V~	24 VAC hot supplied for the supply air humidity sensor	Connects through circuit trace to 24V~ IN pin HOT
IN4	SAH	0-10 VDC positive input from the Supply Air Humidity sensor	SAH parameter reports input status (0-100%H). Unused in current control revision.
C	COM	24 VAC common/0-10 VDC negative for the supply air humidity sensor	Connects through circuit trace to 24V~ IN pin COM
R	24V~	24 VAC hot supplied for the indoor air quality sensor	Connects through circuit trace to 24V~ IN pin HOT
IN5	IAQ	0-10 VDC positive input from the Indoor Air Quality sensor	IAQRange parameter sets the CO2 parts per million measured by the indoor air quality sensor when it outputs 10 VDC; IAQ parameter reports input status (0-5000ppm). Used for demand ventilation functions if the NetIAQ parameter indicates ?Unrel.
C	COM	24 VAC common/0-10 VDC negative for the indoor air quality sensor	Connects through circuit trace to 24V~ IN pin COM
R	24V~	24 VAC hot supplied for the outdoor air quality sensor	Connects through circuit trace to 24V~ IN pin HOT

Table 13: Smart Equipment Economizer Board details (Continued)

Board label	Cover label	Description	Function and comments
IN6	OAQ	0-10 VDC positive input from the Outdoor Air Quality sensor	OAQRange parameter sets the CO2 parts per million measured by the outdoor air quality sensor when it outputs 10 VDC; OAQ parameter reports input status (0-5000ppm). Used for demand ventilation function when DVent-Mode selection is Diff between IAQ and OAQ and the NetOAQ parameter indicates ?Unrel.
C	COM	24 VAC common/0-10 VDC negative for the outdoor air quality sensor	Connects through circuit trace to 24V~ IN pin COM
R	24V~	24 VAC hot supplied for the air monitoring station sensor	Connects through circuit trace to 24V~ IN pin HOT
IN7	FR AIR	0-10 VDC positive input from the air monitoring station sensor	MOA-Range parameter sets the cubic feet per minute/liters per second measured by the air monitoring station sensor when it outputs 10 VDC; Fr Air parameter reports input status (0-50000CFM/23595lps). Used for economizer minimum position reset in speed-controlled indoor blower applications.
C	COM	24 VAC common/0-10 VDC negative for the air monitoring station sensor	Connects through circuit trace to 24V~ IN pin COM
R	24V~	24 VAC hot supplied for the building pressure sensor	Connects through circuit trace to 24V~ IN pin HOT
IN8	BLDG PRES	0-5 VDC positive input from the Building Pressure sensor	BldgPres parameter reports input status (-.250-.250”/w/-.062-.062kPa). Used for modulating power exhaust functions when ExFType selection is Modulating Damper or Variable Frequency Fan.
C	COM	24 VAC common/0-5 VDC negative for the building pressure sensor	Connects through circuit trace to 24V~ IN pin COM
		BINARY INPUTS at right on lower edge of economizer board	
IN9	PURGE	24 VAC hot input from the PURGE dry contact	Purge parameter reports input status (False with 0 VAC input-True with 24 VAC input). When Purge status is True, heating and cooling operation is prevented, the indoor blower and power exhaust fan operate, the economizer actuator is positioned to 100%.
	24V~	24 VAC hot supplied for the purge dry contact	Connects through circuit trace to 24V~ IN pin HOT
IN10	EX VFD FLT	24 VAC hot input from the power Exhaust Variable Frequency Drive Fault contact	ExFanVFDFlt parameter reports input status (Normal with 0 VAC input-Alarm with 24 VAC input) when ExFType selection is Variable Frequency Fan. When ExFanVFDFlt status is Alarm, EX-FAN fan output is prevented.
	24V~	24 VAC hot supplied for the power exhaust variable frequency drive fault contact	Connects through circuit trace to 24V~ IN pin HOT

1. When wiring unit and other devices using the SA Bus and FC Bus, see Table 31.

Indoor air quality - IAQ

Indoor Air Quality (indoor sensor input): The Indoor Air Quality sensor is connected to the economizer board through the IAQ analog input terminal and the associated COM and 24V~ inputs on the economizer board. Terminal IAQ accepts a 0 to +10 Vdc signal with respect to the (IAQ) terminal. When the signal is below its set point, the actuator is allowed to modulate normally in accordance with the enthalpy and mixed air sensor inputs. When the IAQ signal exceeds its set point setting, and there is no call for free cooling, the actuator is proportionately modulated from the 0 to 10 Vdc signal, with 0 Vdc corresponding to full closed and 10 Vdc corresponding to full open. When there is no call for free cooling, the damper position is limited by the IAQ Max damper position setting. When the signal exceeds its set point (Demand Control Ventilation Set Point) setting and there is a call for free cooling, the actuator modulates from the minimum position to the full open position based on the highest call from either the mixed air sensor input or the IAQ voltage input.

- Optional CO2 Space Sensor Kit Part #2AQ04700524
- Optional CO2 Sensor Kit Part #2AQ04700624

Phasing

KE units are properly phased at the factory. Check for proper compressor rotation. If the blower or compressors rotate in the wrong direction at start-up, the electrical connection to the unit is misphased. Change the phasing of the **Field Line Connection at the factory or field supplied disconnect** to obtain proper rotation. (Scroll compressors operate in only one direction. If the scroll is drawing low amperage, has similar suction and discharge pressures, or producing a high noise level, the scroll is misphased.)

⚠ CAUTION

Scroll compressors require proper rotation to operate correctly. Units are properly phased at the factory. Do not change the internal wiring to make the blower condenser fans, or compressor rotate correctly.

⚠ CAUTION

When installing equipment in a facility with a 3 phase high-leg delta power supply, care must be taken to ensure that the high-leg conductor is not attached to either of the two legs of the (single phase, direct drive) X13 or ECM motors. Failure to do so can result in the motor acting erratically or not running at all.

Check for the high leg conductor by checking voltage of each phase to ground.

Example: A or L1 phase to ground, voltage reading is 120V. B or L2 phase to ground, voltage reading is 195 to 208V. C or L3 phase to ground, voltage reading is 120V. Therefore B or L2 phase is the high Leg. The high should always be wired to the center or B or L2 tap.

Note: Check all three phase motors and compressors for proper rotation after making a change. If it is necessary to change 3 phase motor rotation, swap A or L1 and C or L3 only.

Blower rotation

Check for proper supply air blower rotation. If the blower is rotating backwards, the line voltage at the unit point of power connection is misphased (See ‘PHASING’).

Belt tension

The tension on the belt should be adjusted as shown in Figure 20.

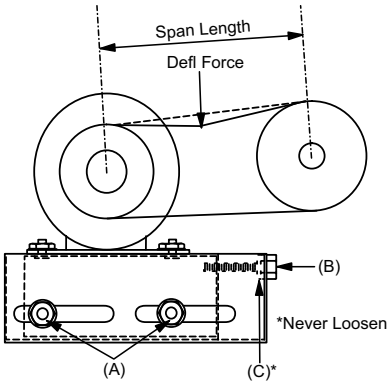

Figure 20: Belt adjustment

⚠ CAUTION

Procedure for adjusting belt tension:

1. Loosen six nuts (top and bottom) A.
2. Adjust by turning (B).
3. Never loosen nuts (C).
4. Use belt tension checker to apply a perpendicular force to one belt at the midpoint of the span as shown. Deflection distance of 4mm (5/32”) is obtained.

To determine the deflection distance from normal position, use a straight edge from sheave to sheave as reference line. The recommended deflection force is as follows:

Tension new belts at the max. deflection force recommended for the belt section. Check the belt tension at least two times during the first 24 hours of operation. Any retensioning should fall between the min. and max. deflection force values.

5. After adjusting re-tighten nuts (A).

CFM static pressure and power-altitude and temperature corrections

The information below should be used to assist in application of product when being applied at altitudes at or exceeding 1000 feet above sea level.

The air flow rates listed in the standard blower performance tables are based on standard air at sea level. As the altitude or temperature increases, the density of air decreases. In order to use the indoor blower tables for high altitude applications, certain corrections are necessary.

A centrifugal fan is a “constant volume” device. This means that, if the rpm remains constant, the CFM delivered is the same regardless of the density of the air. However, since the air at high altitude is less dense, less static pressure will be generated and less power will be required than a similar application at sea level. Air density correction factors are shown in Table 14 and Figure 21.

Table 14: Altitude/temperature correction factors

Air Temp.	Altitude (ft)										
	0	1000	2000	3000	4000	5000	6000	7000	8000	9000	10000
40	1.060	1.022	0.986	0.950	0.916	0.882	0.849	0.818	0.788	0.758	0.729
50	1.039	1.002	0.966	0.931	0.898	0.864	0.832	0.802	0.772	0.743	0.715
60	1.019	0.982	0.948	0.913	0.880	0.848	0.816	0.787	0.757	0.729	0.701
70	1.000	0.964	0.930	0.896	0.864	0.832	0.801	0.772	0.743	0.715	0.688
80	0.982	0.947	0.913	0.880	0.848	0.817	0.787	0.758	0.730	0.702	0.676
90	0.964	0.929	0.897	0.864	0.833	0.802	0.772	0.744	0.716	0.689	0.663
100	0.946	0.912	0.880	0.848	0.817	0.787	0.758	0.730	0.703	0.676	0.651

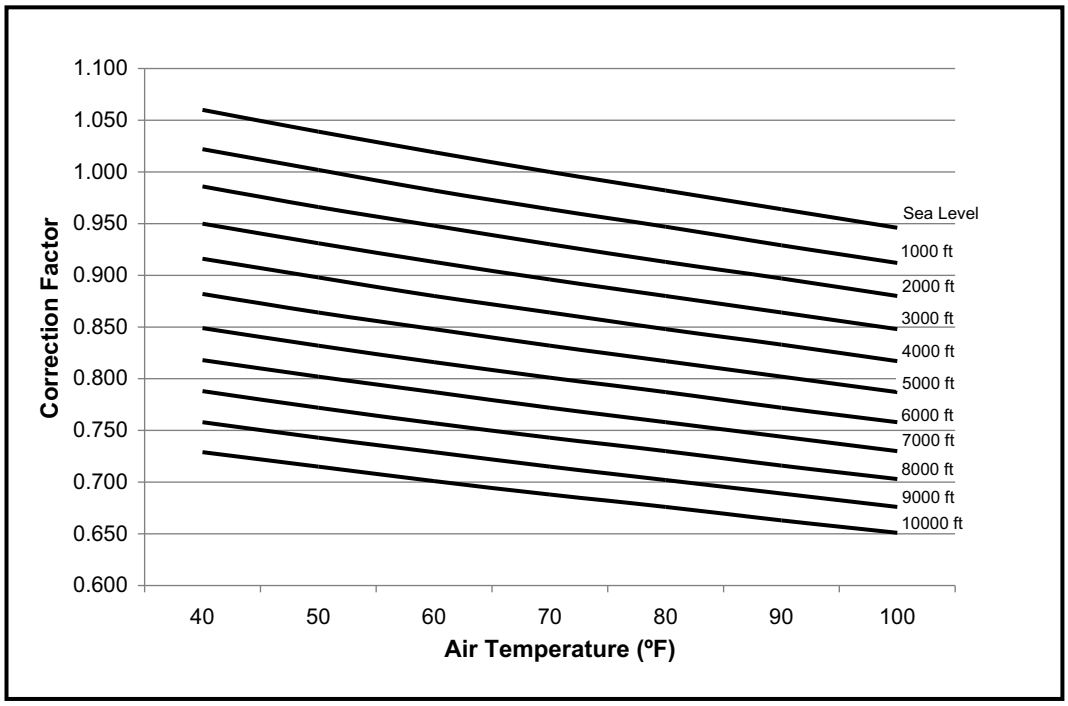

Figure 21: Altitude/temperature correction factors

The examples below will assist in determining the airflow performance of the product at altitude.

Example 1: What are the corrected CFM, static pressure, and BHP at an elevation of 5,000 ft if the blower performance data is 1,400 CFM, 0.6 IWC and 0.67 BHP?

Solution: At an elevation of 5,000 ft the indoor blower will still deliver 1,400 CFM if the rpm is unchanged. However, Table 15 must be used to determine the static pressure and BHP. Since no temperature data is given, we will assume an air temperature of 70°F. Table 14 shows the correction factor to be 0.832.

Corrected static pressure = 0.6 x 0.832 = 0.499 IWC

Corrected BHP = 0.67 x 0.832 = 0.56

Example 2: A system, located at 5,000 feet of elevation, is to deliver 1,400 CFM at a static pressure of 1.5". Use the unit blower tables to select the blower speed and the BHP requirement.

Solution: As in the example above, no temperature information is given so 70°F is assumed.

The 1.5" static pressure given is at an elevation of 5,000 ft The first step is to convert this static pressure to equivalent sea level conditions.

Sea level static pressure = 0.6 / .832 = 0.72"

Enter the blower table at 1,400 sCFM and static pressure of 0.72". The rpm listed will be the same rpm needed at 5,000 ft

Suppose that the corresponding BHP listed in the table is 0.7. This value must be corrected for elevation.

BHP at 5,000 ft = 0.7 x .832 = 0.58

Drive selection

1. Determine side or bottom supply air duct application.
2. Determine desired airflow.
3. Calculate or measure the amount of external static pressure.
4. Using the operating point determined from steps 1, 2 & 3, locate this point on the appropriate supply air blower performance table. (Linear interpolation may be necessary.)
5. Noting the RPM and BHP from step 4, locate the appropriate motor and/or drive on the RPM selection table.
6. Review the BHP compared to the motor options available. Select the appropriate motor and/or drive.
7. Review the RPM range for the motor options available. Select the appropriate drive if multiple drives are available for the chosen motor.
8. Determine turns open to obtain the desired operation point.

Example

1. 2200 CFM
2. 1.6 iwg
3. Using the supply air blower performance table below, the following data point was located: 1478 RPM & 1.82 BHP.
4. Using the RPM selection table below, Size X and Model Y is found.
5. 1.82 BHP exceeds the maximum continuous BHP rating of the 1.5 HP motor. The 2 HP motor is required.
6. 1478 RPM is within the range of the 2 HP drive.
7. Using the 2 HP motor and drive, 2.5 turns open will achieve 1478 RPM.

Example supply air blower performance

Air Flow (CFM)	Available external static pressure - IWG																			
	0.2		0.4		0.6		0.8		1.0		1.2		1.4		1.6		1.8		2.0	
	RPM	BHP	RPM	BHP	RPM	BHP	RPM	BHP	RPM	BHP	RPM	BHP	RPM	BHP	RPM	BHP	RPM	BHP	RPM	BHP
	Field Supplied Drive		Standard Drive Option										HIgh Static Drive Option							
2000	907	1.00	990	1.07	1070	1.15	1146	1.23	1220	1.31	1291	1.40	1359	1.49	1425	1.58	1488	1.68	1550	1.77
2200	960	1.24	1043	1.31	1123	1.39	1199	1.47	1273	1.55	1344	1.64	1412	1.73	1478	1.82	1541	1.92	1602	2.01
2400	1015	1.51	1099	1.59	1178	1.66	1255	1.74	1329	1.83	1400	1.92	1468	2.01	1534	2.10	1597	2.19	1658	2.29
2600	1074	1.83	1157	1.90	1237	1.98	1314	2.06	1387	2.14	1458	2.23	-	-	-	-	-	-	-	-

Table X: RPM selection

Size (Tons)	Model	HP	Max BHP	Motor Sheave	Blower Sheave	5 Turns Open	4 Turns Open	3 Turns Open	2 Turns Open	1 Turn Open	Fully Closed
X	Y	1.5	1.73	1VL44	AK56	930	995	1060	1130	1195	1260
		2	2.3	1VP56	AK56	1325	1395	1460	1525	1590	1660

⚠ CAUTION

If return static reaches -0.2" static, unit could experience a degradation in airflow performance.

Table 15: KE blower performance side duct

KE036 (3 ton belt drive) side duct

Air flow (CFM)	Available external static pressure - IWG[1]																			
	0.2		0.4		0.6		0.8		1		1.2		1.4		1.6		1.8		2	
	RPM	BHP	RPM	BHP	RPM	BHP	RPM	BHP	RPM	BHP	RPM	BHP	RPM	BHP	RPM	BHP	RPM	BHP	RPM	BHP
	Field Supplied Drive				Standard Drive Option								High Static Drive Option							
800	634	0.28	735	0.34	828	0.40	914	0.47	995	0.55	1070	0.63	1140	0.72	1207	0.81	1270	0.90	1332	0.98
1000	659	0.34	760	0.40	853	0.46	939	0.53	1019	0.61	1094	0.69	1165	0.77	1232	0.87	1295	0.95	1356	1.05
1200	685	0.42	786	0.47	879	0.54	965	0.61	1045	0.69	1120	0.77	1191	0.86	1258	0.94	1321	1.04	1382	1.12
1400	716	0.53	816	0.58	909	0.65	995	0.72	1076	0.79	1151	0.88	1221	0.96	1288	1.05	1352	1.15	1413	1.23
1600	752	0.66	852	0.72	945	0.78	1032	0.86	1112	0.93	1187	1.02	1258	1.10	1324	1.19	1388	1.27	1449	1.37
																			FS4	

1. Blower performance includes gas heat exchangers and 1” filters. See STATIC RESISTANCE table for additional applications.
2. See RPM SELECTION table to determine desired motor sheave setting and to determine the maximum continuous BHP.
3. kW = BHP x 0.932.
4. Field Supplied Drive.

KE048 (4 ton belt drive) side duct

Air flow (CFM)	Available external static pressure - IWG[1]																			
	0.2		0.4		0.6		0.8		1		1.2		1.4		1.6		1.8		2	
	RPM	BHP	RPM	BHP	RPM	BHP	RPM	BHP	RPM	BHP	RPM	BHP	RPM	BHP	RPM	BHP	RPM	BHP	RPM	BHP
	Field Supplied Drive						Standard Drive Option								High Static Drive Option					
1000	703	0.27	786	0.42	866	0.49	942	0.58	1016	0.67	1087	0.76	1155	0.85	1221	0.96	1284	1.05	1345	1.16
1200	733	0.33	817	0.47	896	0.56	973	0.64	1047	0.73	1118	0.82	1186	0.92	1252	1.01	1315	1.11	1376	1.21
1400	770	0.42	853	0.56	933	0.63	1010	0.73	1083	0.81	1154	0.90	1222	1.00	1288	1.10	1352	1.19	1413	1.30
1600	811	0.55	895	0.67	974	0.76	1051	0.84	1125	0.94	1196	1.02	1264	1.12	1330	1.22	1393	1.32	1454	1.42
1800	857	0.73	940	0.84	1020	0.93	1097	1.01	1171	1.10	1242	1.19	1310	1.29	1375	1.38	1439	1.49	1500	1.59
2000	907	0.95	990	1.05	1070	1.14	1146	1.22	1220	1.31	1291	1.40	1359	1.50	1425	1.59	1488	1.70	1550	1.79
																			FS4	

1. Blower performance includes gas heat exchangers and 1” filters. See STATIC RESISTANCE table for additional applications.
2. See RPM SELECTION table to determine desired motor sheave setting and to determine the maximum continuous BHP.
3. kW = BHP x 0.932.
4. Field Supplied Drive.

KE060 (5 ton belt drive) side duct

Air flow (CFM)	Available external static pressure - IWG[1]																			
	0.2		0.4		0.6		0.8		1		1.2		1.4		1.6		1.8		2	
	RPM	BHP	RPM	BHP	RPM	BHP	RPM	BHP	RPM	BHP	RPM	BHP	RPM	BHP	RPM	BHP	RPM	BHP	RPM	BHP
	Field Supplied Drive						Standard Drive Option										High Static Drive Option			
1200	733	0.39	817	0.47	896	0.56	973	0.64	1047	0.73	1118	0.82	1186	0.92	1252	1.01	1315	1.11	1376	1.21
1400	770	0.47	853	0.56	933	0.63	1010	0.73	1083	0.81	1154	0.91	1222	1.00	1288	1.10	1352	1.19	1413	1.30
1600	811	0.60	895	0.67	974	0.76	1051	0.84	1125	0.94	1196	1.02	1264	1.12	1330	1.22	1393	1.32	1454	1.43
1800	857	0.77	940	0.84	1020	0.93	1097	1.01	1171	1.10	1242	1.19	1310	1.29	1375	1.38	1439	1.49	1500	1.60
2000	907	0.98	990	1.05	1070	1.14	1146	1.22	1220	1.31	1291	1.40	1359	1.50	1425	1.60	1488	1.70	1550	1.80
2200	960	1.23	1043	1.31	1123	1.39	1199	1.48	1273	1.56	1344	1.66	1412	1.75	1478	1.85	1541	1.96	1602	2.05
2400	1015	1.52	1099	1.61	1178	1.68	1255	1.76	1329	1.86	1400	1.96	1468	2.05	1534	2.15	1597	2.24	1658	2.35
2600	1074	1.86	1157	1.93	1237	2.02	1314	2.10	1387	2.19	1458	2.28	-	-	-	-	-	-	-	-

1. Blower performance includes gas heat exchangers and 1” filters. See STATIC RESISTANCE table for additional applications.
2. See RPM SELECTION table to determine desired motor sheave setting and to determine the maximum continuous BHP.
3. kW = BHP x 0.932.
4. Field Supplied Drive.

KE072 (6 ton belt drive) side duct

Air Flow (CFM)	Available external static pressure - IWG[1]																			
	0.2		0.4		0.6		0.8		1		1.2		1.4		1.6		1.8		2	
	RPM	BHP	RPM	BHP	RPM	BHP	RPM	BHP	RPM	BHP	RPM	BHP	RPM	BHP	RPM	BHP	RPM	BHP	RPM	BHP
	FSD[4]		Standard Static Drive Option														High Static Drive Option			
1600	917	0.28	975	0.48	1027	0.63	1075	0.75	1120	0.84	1166	0.93	1213	1.02	1265	1.13	1323	1.26	1390	1.44
1800	945	0.44	1004	0.64	1056	0.79	1104	0.91	1149	1.00	1194	1.09	1242	1.18	1294	1.29	1352	1.43	1418	1.60
2000	981	0.65	1039	0.84	1091	0.99	1139	1.11	1184	1.21	1230	1.30	1277	1.39	1329	1.50	1387	1.63	1454	1.80
2200	1023	0.90	1081	1.09	1133	1.24	1181	1.36	1226	1.46	1272	1.55	1319	1.64	1371	1.75	1429	1.88	1496	2.06
2400	1072	1.19	1130	1.39	1182	1.54	1230	1.66	1276	1.75	1321	1.84	1369	1.93	1420	2.04	1478	2.17	1545	2.35
2600	1128	1.53	1186	1.73	1238	1.88	1286	1.99	1332	2.09	1377	2.18	1425	2.27	1476	2.38	1534	2.51	1601	2.69
2800	1191	1.91	1249	2.10	1301	2.25	1349	2.37	1394	2.47	1440	2.55	1487	2.65	1539	2.75	1597	2.89	1664	3.06
3000	1260	2.32	1318	2.52	1370	2.67	1418	2.79	1463	2.88	1509	2.97	1556	3.06	1608	3.17	1666	3.30	----	----

1. Blower performance includes gas heat exchangers and 1” filters. See STATIC RESISTANCE table for additional applications.
2. See RPM SELECTION table to determine desired motor sheave setting and to determine the maximum continuous BHP.
3. 1kW = BHP x 0.862.
4. Field Supplied Drive.

KE036 - 060 (3-5 ton direct drive) side duct

UNIT TONNAGE	MOTOR[1] SPEED	AVailable external static pressure - IWG[2]																	
		0.2		0.3		0.4		0.5		0.6		0.7		0.8		0.9		1.0	
		CFM	WATTS	CFM	WATTS	CFM	WATTS	CFM	WATTS	CFM	WATTS	CFM	WATTS	CFM	WATTS	CFM	WATTS	CFM	WATTS
3[3]	5 (HI)	1574	320	1530	335	1488	349	1451	363	1411	376	1374	390	1331	403	1292	417	1249	430
	4 (MED/HI)	1480	263	1433	276	1389	290	1347	303	1303	316	1257	329	1208	343	1153	358	1080	374
	3 (MED)	1332	208	1286	221	1241	234	1195	246	1146	258	1097	272	1031	288	962	303	919	313
	2 (MED/LOW)	1227	171	1178	183	1129	195	1076	207	1021	220	953	235	891	248	-	-	-	-
	1 (LOW)	1075	130	992	134	930	145	858	158	-	-	-	-	-	-	-	-	-	-
4[3]	5 (HI)	-	-	2067	696	2027	714	1991	734	1953	749	1910	764	1860	769	1770	743	1621	685
	4 (MED/HI)	1913	539	1877	557	1839	571	1798	585	1764	602	1721	619	1677	638	1621	653	1545	639
	3 (MED)	1722	408	1682	426	1634	438	1597	455	1554	472	1506	490	1450	505	1404	521	1370	536
	2 (MED/LOW)	1475	321	1435	335	1388	352	1359	362	1319	376	1271	393	1220	411	1186	422	1142	437
	1 (LOW)	1332	223	1290	237	1232	247	-	-	-	-	-	-	-	-	-	-	-	-
5[3]	5 (HI)	2245	883	2247	931	2236	950	2211	964	2171	979	2114	971	2034	940	1948	898	1855	854
	4 (MED/HI)	2135	771	2116	784	2108	808	2078	826	2041	844	2004	859	1955	861	1886	843	1792	806
	3 (MED)	2010	637	1989	656	1975	675	1938	696	1900	715	1867	730	1822	740	1784	756	1716	748
	2 (MED/LOW)	1672	408	1633	426	1586	438	1550	455	1509	472	1462	490	1408	505	1363	521	1330	536
	1 (LOW)	1562	327	1529	339	1491	356	-	-	-	-	-	-	-	-	-	-	-	-

1. Factory set on medium speed tap.
2. Includes allowances for a wet evaporator coil, 1” filters, and the heat exchangers. Refer to STATIC RESISTANCES Table for resistance values.
3. Side Duct application (230 Volts)

Table 16: KE blower performance bottom duct

KE036 (3 ton belt drive) bottom duct

Air Flow (CFM)	Available external static pressure - IWG[1]																			
	0.2		0.4		0.6		0.8		1		1.2		1.4		1.6		1.8		2	
	RPM	BHP	RPM	BHP	RPM	BHP	RPM	BHP	RPM	BHP	RPM	BHP	RPM	BHP	RPM	BHP	RPM	BHP	RPM	BHP
	Field Supplied Drive				Standard Drive Option								High Static Drive Option							
800	613	0.29	724	0.34	826	0.41	920	0.48	1007	0.56	1089	0.63	1165	0.71	1237	0.80	1306	0.88	1372	0.98
1000	640	0.34	751	0.41	853	0.47	947	0.53	1034	0.61	1116	0.69	1192	0.77	1264	0.86	1333	0.95	1399	1.03
1200	669	0.43	779	0.48	881	0.55	975	0.61	1063	0.69	1144	0.77	1220	0.85	1293	0.94	1361	1.02	1427	1.12
1400	702	0.52	812	0.59	914	0.65	1009	0.71	1096	0.79	1177	0.87	1254	0.96	1326	1.04	1394	1.13	1460	1.21
1600	741	0.66	852	0.71	954	0.78	1048	0.85	1135	0.93	1217	1.00	1293	1.08	1365	1.17	1434	1.25	1500	1.35
																			FS4	

1. Blower performance includes gas heat exchangers and 1” filters. See STATIC RESISTANCE table for additional applications.
2. See RPM SELECTION table to determine desired motor sheave setting and to determine the maximum continuous BHP.
3. kW = BHP x 0.932.

KE048 (4 ton belt drive) bottom duct

`Air Flow (CFM)	Available external static pressure - IWG[1]																			
	0.2		0.4		0.6		0.8		1		1.2		1.4		1.6		1.8		2	
	RPM	BHP	RPM	BHP	RPM	BHP	RPM	BHP	RPM	BHP	RPM	BHP	RPM	BHP	RPM	BHP	RPM	BHP	RPM	BHP
	Field Supplied Drive										Standard Drive Option						High Static Drive Option			
1000	688	0.34	779	0.42	866	0.50	949	0.59	1029	0.67	1107	0.77	1181	0.85	1253	0.95	1322	1.05	1388	1.15
1200	722	0.40	812	0.48	899	0.56	983	0.64	1063	0.73	1140	0.82	1215	0.90	1286	1.01	1355	1.11	1422	1.20
1400	761	0.48	852	0.56	939	0.64	1022	0.73	1103	0.81	1180	0.89	1254	0.99	1326	1.08	1395	1.19	1462	1.29
1600	807	0.61	897	0.68	984	0.76	1068	0.84	1148	0.93	1225	1.02	1300	1.12	1371	1.21	1440	1.31	1507	1.40
1800	856	0.77	947	0.84	1034	0.93	1118	1.00	1198	1.10	1275	1.18	1349	1.28	1421	1.37	1490	1.47	1557	1.57
2000	910	0.97	1001	1.04	1088	1.13	1172	1.21	1252	1.30	1329	1.39	1403	1.48	1475	1.57	1544	1.68	1611	1.77
																			FS4	

1. Blower performance includes gas heat exchangers and 1” filters. See STATIC RESISTANCE table for additional applications.
2. See RPM SELECTION table to determine desired motor sheave setting and to determine the maximum continuous BHP.
3. kW = BHP x 0.932.

KE060 (5 ton belt drive) bottom duct

Air Flow (CFM)	Available external static pressure - IWG[1]																			
	0.2		0.4		0.6		0.8		1		1.2		1.4		1.6		1.8		2	
	RPM	BHP	RPM	BHP	RPM	BHP	RPM	BHP	RPM	BHP	RPM	BHP	RPM	BHP	RPM	BHP	RPM	BHP	RPM	BHP
	Field Supplied Drive						Standard Drive Option								High Static Drive Option					
1200	722	0.40	812	0.48	899	0.56	983	0.64	1063	0.73	1140	0.82	1215	0.90	1286	1.01	1355	1.11	1422	1.20
1400	761	0.48	852	0.56	939	0.64	1022	0.73	1103	0.81	1180	0.89	1254	0.99	1326	1.08	1395	1.19	1462	1.29
1600	807	0.61	897	0.68	984	0.76	1068	0.84	1148	0.93	1225	1.02	1300	1.12	1371	1.21	1440	1.31	1507	1.40
1800	856	0.77	947	0.84	1034	0.93	1118	1.00	1198	1.10	1275	1.18	1349	1.28	1421	1.37	1490	1.47	1557	1.57
2000	910	0.97	1001	1.04	1088	1.13	1172	1.21	1252	1.30	1329	1.39	1403	1.48	1475	1.57	1544	1.68	1611	1.77
2200	968	1.22	1059	1.30	1146	1.37	1229	1.46	1309	1.54	1387	1.64	1461	1.73	1533	1.83	1602	1.92	1668	2.03
2400	1029	1.51	1119	1.58	1206	1.67	1290	1.74	1370	1.84	1448	1.92	1522	2.02	1593	2.11	1663	2.21	1729	2.31
2600	1093	1.84	1183	1.91	1270	1.98	1354	2.07	1434	2.15	1511	2.25	1586	2.34	-	-	-	-	-	-
																			FS4	

1. Blower performance includes gas heat exchangers and 1” filters. See STATIC RESISTANCE table for additional applications.
2. See RPM SELECTION table to determine desired motor sheave setting and to determine the maximum continuous BHP.
3. kW = BHP x 0.932.

KE072 (6 ton belt drive) bottom duct

Air Flow (CFM)	Available external static pressure - IWG[1]																			
	0.2		0.4		0.6		0.8		1		1.2		1.4		1.6		1.8		2	
	RPM	BHP	RPM	BHP	RPM	BHP	RPM	BHP	RPM	BHP	RPM	BHP	RPM	BHP	RPM	BHP	RPM	BHP	RPM	BHP
	Field Supplied Drive				Standard Static Drive Option										High Static Drive Option					
1600	829	0.46	914	0.52	988	0.61	1055	0.71	1115	0.83	1170	0.95	1222	1.09	1273	1.23	1324	1.36	1377	1.50
1800	858	0.63	943	0.70	1017	0.78	1084	0.89	1144	1.00	1199	1.13	1251	1.26	1302	1.40	1353	1.54	1406	1.67
2000	898	0.84	983	0.90	1057	0.99	1124	1.09	1184	1.21	1239	1.34	1291	1.47	1342	1.61	1393	1.75	1446	1.88
2200	945	1.08	1030	1.15	1104	1.23	1171	1.34	1231	1.45	1286	1.58	1338	1.72	1389	1.85	1440	1.99	1493	2.13
2400	997	1.37	1081	1.44	1156	1.52	1222	1.62	1282	1.74	1338	1.87	1390	2.00	1441	2.14	1491	2.28	1544	2.41
2600	1052	1.70	1136	1.77	1211	1.85	1277	1.96	1337	2.07	1392	2.20	1445	2.33	1495	2.47	1546	2.61	1599	2.74
2800	1108	2.08	1192	2.14	1267	2.23	1334	2.33	1394	2.45	1449	2.58	1501	2.71	1552	2.85	1603	2.99	1656	3.12
3000	1166	2.50	1250	2.57	1325	2.65	1391	2.75	1451	2.87	1506	3.00	1558	3.13	1609	3.27	----	----	----	----

1. Blower performance includes gas heat exchangers and 1” filters. See STATIC RESISTANCE table for additional applications.
2. See RPM SELECTION table to determine desired motor sheave setting and to determine the maximum continuous BHP.
3. 1kW = BHP x 0.862.

KE036 - 060 (3-5 ton direct drive) bottom duct

Unit tonnage	Motor[1] speed	Available external static pressure - IWG[2]																	
		0.2		0.3		0.4		0.5		0.6		0.7		0.8		0.9		1.0	
		CFM	WATTS	CFM	WATTS	CFM	WATTS	CFM	WATTS	CFM	WATTS	CFM	WATTS	CFM	WATTS	CFM	WATTS	CFM	WATTS
3[3]	5 (HI)	1520	320	1478	335	1438	349	1401	363	1363	376	1327	390	1286	403	1248	417	1207	430
	4 (MED/HI)	1430	263	1384	276	1342	290	1302	303	1259	316	1215	329	1168	343	1114	358	1044	374
	3 (MED)	1287	208	1242	221	1199	234	1155	246	1108	258	1060	272	997	288	930	303	889	313
	2 (MED/LOW)	1185	171	1138	183	1091	195	1041	207	987	220	921	235	862	248	-	-	-	-
	1 (LOW)	1040	130	959	134	900	145	-	-	-	-	-	-	-	-	-	-	-	-
4[3]	5 (HI)	-	-	1995	696	1957	714	1922	734	1885	749	1844	764	1795	769	1709	743	1566	685
	4 (MED/HI)	1846	539	1812	557	1776	571	1736	585	1704	602	1662	619	1619	638	1566	653	1492	639
	3 (MED)	1662	408	1624	426	1577	438	1542	455	1501	472	1454	490	1400	505	1356	521	1323	536
	2 (MED/LOW)	1566	362	1526	380	1480	391	1450	406	1411	423	1363	440	1312	455	1279	469	1235	485
	1 (LOW)	1287	223	1246	237	1190	247	-	-	-	-	-	-	-	-	-	-	-	-
5[3]	5 (HI)	2166	883	2169	931	2158	950	2134	964	2095	979	2040	971	1963	940	1881	898	1791	854
	4 (MED/HI)	2060	771	2042	784	2035	808	2006	826	1970	844	1934	859	1888	861	1821	843	1730	806
	3 (MED)	1940	637	1920	656	1907	675	1870	696	1834	715	1802	730	1759	740	1722	756	1657	748
	2 (MED/LOW)	1688	413	1645	432	1611	451	1575	468	1534	479	1498	497	1461	513	-	-	-	-
	1 (LOW)	1509	327	1477	339	-	-	-	-	-	-	-	-	-	-	-	-	-	-

1. Factory set on medium speed tap.
2. Includes allowances for a wet evaporator coil, 1” filters, and the heat exchangers. Refer to STATIC RESISTANCES Table for resistance values.
3. Bottom Duct application (230 Volts)

Table 17: Belt drive RPM selection

Size (ton)	Model	HP	Max BHP	Motor Sheave	Blower Sheave	5 Turns Open	4 Turns Open	3 Turns Open	2 Turns Open	1 Turn Open	Fully Closed
036	KE	1.5	1.73	1VL44	AK64	805	865	920	980	1035	1095
(3)		1.5	1.73	1VP56	AK66	1115	1170	1225	1280	1335	1390
048	KE	1.5	1.73	1VL44	AK56	930	995	1060	1130	1195	1260
(4)		1.5	1.73	1VP56	AK61	1210	1270	1330	1390	1455	1515
060	KE	1.5	1.73	1VL44	AK56	930	995	1060	1130	1195	1260
(5)		2	2.3	1VP56	AK56	1325	1395	1460	1525	1590	1660
072	KE	1.5	1.73	1VL44	AK56	930	995	1060	1130	1195	1260
(6)		3	3.45	1VP56	AK56	1325	1395	1460	1525	1590	1660

* Field Option Sheave.

Table 18: Indoor blower specifications (belt drive)

Size (ton)	Motor					Motor Sheave			Blower Sheave			Belt
	HP	RPM	Eff.	SF	Frame	Datum Dia. (in.)	Bore (in.)	Model	Datum Dia. (in.)	Bore (in.)	Model	
036	1-1/2	1725	0.8	1.15	56	2.8 - 3.8	7/8	1VL44	6.0	1	AK64	A37
(3.0)	1-1/2	1725	0.8	1.15	56	4.0 - 5.0	7/8	1VP56	6.2	1	AK66	A39
048	1-1/2	1725	0.8	1.15	56	2.8 - 3.8	7/8	1VL44	5.2	1	AK56	A36
(4.0)	1-1/2	1725	0.8	1.15	56	4.0 - 5.0	7/8	1VP56	5.7	1	AK61	A38
060	1-1/2	1725	0.8	1.15	56	2.8 - 3.8	7/8	1VL44	5.2	1	AK56	A36
(5.0)	2	1725	0.8	1.15	56	4.0 - 5.0	7/8	1VP56	5.2	1	AK56	A38
072	1-1/2	1725	0.8	1.15	56	2.8 - 3.8	7/8	1VL44	5.2	1	AK56	A36
(6.0)	3	1725	0.8	1.15	56	4.0 - 5.0	7/8	1VP56	5.2	1	AK56	A38

Table 19: Power exhaust specifications

Model	Voltage	Motor			Motor			Fuse Size	CFM @ 0.1 ESP
		HP	RPM	QTY	LRA	FLA	MCA		
2PE04703725	208/230-1-60	1/2	1725[1]	1	23.7	4.4	5.5	8	1350
2PE04703746	460-1-60	1/2	1725[1]	1	4.1	1.7	2.1	5	1350
2PE04703758	575-3-60	1/2	1725	1	4.5	0.9	1.1	2	1350

1. Motors are multi-tapped and factory wired for high speed.

Checking supply air CFM

The RPM of the supply air blower will depend on the required CFM, the unit accessories or options and the static resistances of both the supply and the return air duct systems. With this information, the motor speed tap (direct drive) or the motor pulley number of turns open (belt drive) can be determined from the Blower Performance Data Tables.

Note the following:

1. The supply air CFM must be within the limitations shown in the Unit Physical Data Table .
2. Pulleys can be adjusted in half turn increments.
3. The tension on the belt should be adjusted as shown in the Belt Adjustment Figure 20.
4. Tighten blower pulley and motor sheave set screws after any adjustments. Re-check set screws after 10-12 hrs run time is recommended.

Start the supply air blower motor. Adjust the resistances in both the supply and the return air duct systems to balance the air distribution throughout the conditioned space. The job specifications may require that this balancing be done by someone other than the equipment installer.

To check the supply air CFM after the initial balancing has been completed:

1. Remove the two 5/16 in. dot plugs from the blower motor and the filter access panels shown in Figure 8.
2. Insert at least 8 in. of 1/4 in. tubing into each of these holes for sufficient penetration into the air flow on both sides of the indoor coil.

Note: The tubes must be inserted and held in a position perpendicular to the air flow so that velocity pressure will not affect the static pressure readings.

3. Using an inclined manometer, determine the pressure drop across a dry evaporator coil. Since the moisture on an evaporator coil may vary greatly, measuring the pressure drop across a wet coil under field conditions would be inaccurate. To assure a dry coil, the compressors should be deactivated while the test is being run.
4. Knowing the pressure drop across a dry coil, the actual CFM through the unit can be determined from the curve in Pressure Drop vs. Supply Air CFM (Figure 22).

⚠WARNING

Failure to properly adjust the total system air quantity and static pressure can result in extensive system damage.

After readings have been obtained, remove the tubes and reinstall the two 5/16” dot plugs that were removed in Step 1.

Note: De-energize the compressors before taking any test measurements to assure a dry indoor coil.

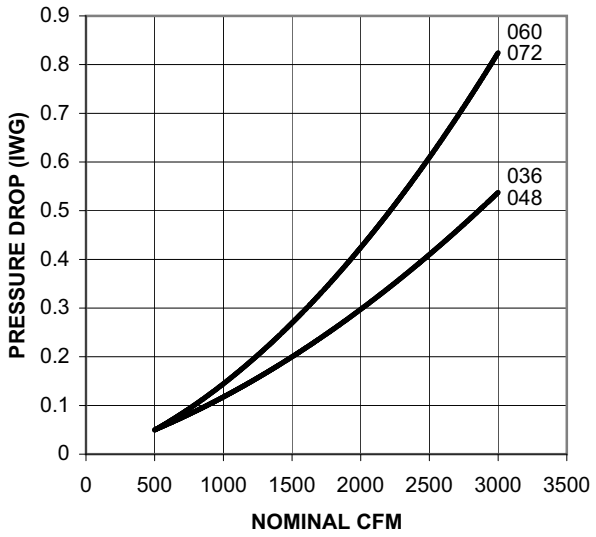

Figure 22: Pressure drop across coil

Table 20: Additional static resistance

Size (ton)	CFM	Cooling only[1]	Economizer[2 3]	Electric heat kW[2]	
				7 - 15	20 - 30
036 (3.0) 048 (4.0) 060 (5.0) 072 (6.0)	1000	0.08	0.07	0.04	0.06
	1200	0.10	0.08	0.05	0.07
	1400	0.12	0.09	0.06	0.08
	1600	0.14	0.11	0.07	0.09
	1800	0.16	0.13	0.08	0.11
	2000	0.18	0.15	0.10	0.13
	2200	0.20	0.17	0.12	0.15
	2400	0.23	0.20	0.14	0.17
	2600	0.26	0.23	0.16	0.20
	2800	0.29	0.26	0.19	0.23
	3000	0.32	0.30	0.22	0.26

1. Add these values to the available static resistance in the respective Blower Performance Tables.
2. Deduct these values from the available external static pressure shown in the respective Blower Performance Tables.
3. The pressure drop through the economizer is greater for 100% outdoor air than for 100% return air. If the resistance of the return air duct is less than 0.25 IWG, the unit will deliver less CFM during full economizer operation.

Operation

Cooling sequence of operation

KE units have either a Simplicity Lite (3-5 ton units only) or a Smart Equipment Control Board. Both control boards work in a similar fashion, as outlined below.

With a demand for first stage cooling either from a thermostat or space sensor, the low-voltage control circuit to "C1" and "G" is completed. For first stage cooling, the compressor is energized and the 1st stage operates (67% capacity). The UCB will energize the VFD equipped blower motor at low speed as set in the Smart Equipment control. When the thermostat calls for the second stage of cooling, the low-voltage control circuit to "C2" is completed. The control board energizes the 2nd stage of the compressor (100% capacity). If there is an initial call for both stages of cooling, the UCB will delay energizing the 2nd stage of the compressor by 30 seconds in order to avoid a power rush. Once the thermostat has been satisfied, it will de-energize C1 and C2. If the compressor has satisfied the minimum run time (3 min default), the compressors and condenser fans are de-energized. Otherwise, the unit operates until the minimum run has been completed. Upon the compressor de-energizing, the blower is stopped following the elapse of the fan off delay for cooling.

The call is passed to the **Unit Control Board (UCB),** which then determines whether the requested operation is available and, if so, which components to energize.

If at any time a call for both heating and cooling are present, the heating operation will be performed. If operating, the cooling system is halted as with a completion of a call for cooling. Heating always takes priority.

Continuous blower

By setting the room thermostat fan switch to "ON," the supply air blower will operate continuously.

Intermittent blower

With the room thermostat fan switch set to "AUTO" and the system switch set to either the "AUTO" or "HEAT" settings, the blower is energized whenever a cooling or heating operation is requested. The blower is energized after any specified delay associated with the operation.

When energized, the indoor blower has a minimum run time of 30 seconds. Additionally, the indoor blower has a minimum off delay of 10 seconds.

No outdoor air options

When the thermostat calls for cooling, the low-voltage control circuit from “R” to “Y1” and “G” is completed. The compressor and condenser fan motor are energized. After completing the specified fan on delay for cooling, the UCB will energize the blower motor.

Once the thermostat has been satisfied, it will de-energize Y1. If the compressor has satisfied its minimum run time, the compressor and condenser fan de-energize. Otherwise, the unit operates the cooling system until the minimum run time for the compressor has been completed. After the compressor de-energizes, the blower is stopped following the elapse of the fan off delay for cooling.

To be available, a compressor must not be locked-out due to a high or low-pressure switch or freezestat trip Simplicity Lite Control or Evaporator Low Limit sensor **(EC1)** detecting a temperature below 26° F Smart Equipment Control and the anti-short cycle delay (ASCD) must have elapsed.

Economizer with single enthalpy sensor (Simplicity Lite) or economizer with dry bulb sensor (Smart Equipment)

When the room thermostat calls for cooling, the low voltage control circuit from “R” to “G” and “Y1” is completed. The UCB energizes the blower motor (if the fan switch on the room thermostat is set in the AUTO position) and drives the economizer dampers from fully closed to their minimum position. If the enthalpy (Simplicity Lite) or Dry bulb temperature (Smart Equipment) of the outdoor air is below the setpoint of the enthalpy or dry bulb controller (previously determined), “Y1” energizes the economizer. The dampers will modulate to maintain a constant supply air temperature as monitored by the discharge air sensor. If the outdoor air enthalpy (Simplicity Lite) or dry bulb temperature (Smart Equipment) is above the setpoint, “Y1” energizes the compressor and condenser fan motor only.

Once the thermostat has been satisfied, it will de-energize “Y1”. If the compressor has satisfied its minimum run time, the compressor and condenser fan are de-energized. Otherwise, the unit operates the cooling system until the minimum run times for the compressor has been completed. After the compressor de-energizes, the blower is stopped following the elapse of the fan off delay for cooling, and the economizer damper goes to the closed position. If the unit is in continuous fan operation the economizer damper goes to the min. position.

Economizer with dual enthalpy sensors

The operation with the dual enthalpy sensors is identical to the single sensor except that a second enthalpy sensor is mounted in the return air. This return air sensor allows the economizer to choose between outdoor air and return air, whichever has the lowest enthalpy value, to provide maximum operating efficiency.

Economizer with power exhaust

A unit equipped with an economizer (dry bulb single or dual enthalpy) and a power exhaust operates as specified above with one addition. The power exhaust motor is energized 45 seconds after the actuator position exceeds the exhaust fan set point on the economizer control. When the power exhaust is operating, the second stage of mechanical cooling will not operate. As always, the "R" to "G" connection provides minimum position but does not provide power exhaust operation.

Field installed motorized outdoor air dampers

This system operation is the same as the units with no outdoor air options with one exception. When the R to G circuit is complete, the motorized damper drives open to a desired minimum damper position set by AUX selection dial (Mode selection dial shall be set to 4).**Actuator settings:**

1. Set the Mode dial to 4 for minimum position
2. Set the AUX selection dial to 10 for minimum damper position

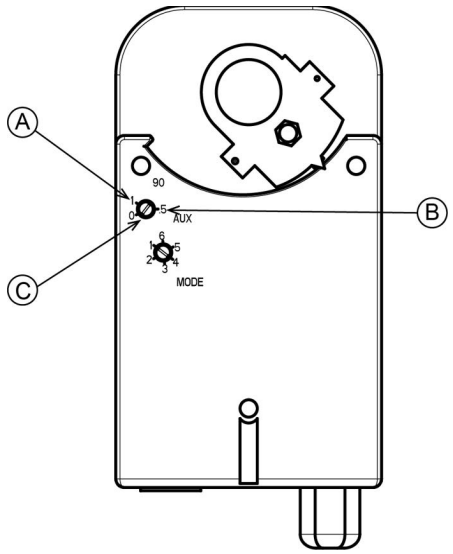

Figure 23: Actuator settings

Callout	Description
A	AUX dial set to 100%
B	AUX dial set to 50%
C	AUX dial set to 10%

Note: Secure the bolt to the damper shaft. Tighten to a torque of 240 lb-in.

Cooling operation errors

Each cooling system is monitored for operation outside of the intended parameters. Errors are handled as described below. All system errors override minimum run times for compressors.

High-pressure limit switch

During cooling operation, if a high-pressure limit switch opens, the UCB will de-energize the compressor, initiate the ASCD (Anti-short cycle delay), and stop the condenser fan. If the call for cooling is still present at the conclusion of the ASCD, the UCB will re-energize the compressor.

Should a high-pressure switch open three times within two hours of operation, the UCB will lock-out the associated compressor and flash a code on the Simplicity Lite Control (see Table 30) or sent error message to the LCD Smart Equipment Control.

Low-pressure limit switch

The low-pressure limit switch is not monitored during the initial 30 seconds of a cooling system's operation. For the following 30 seconds, the UCB will monitor the low-pressure switch to ensure it closes. If the low-pressure switch fails to close after the 30-second monitoring phase, the UCB will de-energize the compressor, initiate the ASCD, and stop the condenser fan.

Once the low-pressure switch has been proven (closed during the 30-second monitor period described above), the UCB will monitor the low-pressure limit switch for any openings. If the low-pressure switch opens for greater than 5 seconds, the UCB will de-energize the compressor, initiate the ASCD, and stop the condenser fan.

If the call for cooling is still present at the conclusion of the ASCD, the UCB will re-energize the compressor.

Should a low-pressure switch open three times within one hour of operation, the UCB will lock-out the compressor and flash a code on the Simplicity Lite Control (Table 30) or sent error message to the LCD Smart Equipment Control.

Freezestat (Simplicity Lite Control)

During cooling operation, if a freezestat opens, the UCB will de-energize the compressor, initiate the ASCD, and stop the condenser fan. If the call for cooling is still present at the conclusion of the ASCD, the UCB will re-energize the halted compressor.

Should a freezestat open three times within two hours of operation, the UCB will lock-out the associated compressor and flash a code on the Simplicity Lite Control (Table 30).

Evaporator low limit (Smart Equipment Control)

During cooling operation, if the **Evaporator Low Limit Sensor (EC1)** (Located on the Suction Line at the Evaporator Coil.) detects a temperature below 26 Deg. F (default), the UCB will de-energize the compressor, initiate the ASCD, and stop the condenser fan. If the call for cooling is still present at the conclusion of the ASCD, the UCB will re-energize the halted compressor.

Should the evaporator low limit sensor **(EC1)** detect a temperature below 26°F three times within two hours of operation, the UCB will lock-out the associated compressor and flash an error message.

Low ambient cooling (Smart Equipment Control)

To determine when to operate in low ambient mode, the UCB has an **Outdoor Air Temperature Sensor (OAT)** with a low ambient setpoint at 45ºF (default). When the **OAT Sensor** senses a temperature below the low ambient setpoint and the thermostat is calling for cooling, the UCB will operate in the low ambient mode.

Low ambient mode operates the compressors in this manner:

10 minutes on, 5 minutes off. The indoor blower is operated throughout the cycle. The 5-minute off period is necessary to defrost the indoor coil.

Low ambient mode always begins with compressor operation. Compressor minimum run time may extend the minutes of compressor operation. The off cycle will begin immediately following the elapse of the minimum run time.

When operating in low ambient mode, an **Evaporator Low Limit Sensor (EC1)** temperature below 26ºF will de-energize the compressor. If the call for cooling is still present at the end

of the ASCD and the evaporator temperature **(EC1)** is above 26ºF, the unit will resume operation.

Safety controls

The unit control board monitors the following inputs for each cooling system:

1. A suction line freezestat (Simplicity Lite Control) to protect against low evaporator temperatures due to a low airflow or a low return air temperature, (opens at 26 ± 5 °F and resets at 38 ± 5°F) or an evaporator low limit sensor **(EC1)** (Located on the Suction Line at the Evaporator Coil.) (Smart Equipment Control) to protect against low evaporator temperatures due to a low airflow or a low return air temperature, set at 26°F.
2. A high-pressure switch to protect against excessive discharge pressures due to a blocked condenser coil or a condenser motor failure, (opens at 625 ± 25 psig).
3. A low-pressure switch to protect against loss of refrigerant charge, (opens at 50 ± 5 psig).

The above pressure switches are hard-soldered to the unit. The refrigeration systems are independently monitored and controlled. On any fault, only the associated system will be affected by any safety/preventive action.

The unit control board monitors the temperature limit switch of electric heat units and the temperature limit switch and the gas valve of gas furnace units.

Compressor protection

In addition to the external pressure switches, the compressor also has inherent (internal) protection. If there is an abnormal temperature rise in a compressor, the protector will open to shut down the compressor. The UCB incorporates features to minimize compressor wear and damage. An **Anti-Short Cycle Delay (ASCD)** is utilized to prevent operation of a compressor too soon after its previous run. Additionally, a minimum run time is imposed any time a compressor is energized.

The ASCD is initiated on unit start-up and on any compressor reset or lock-out.

Flash codes or error messages

The UCB will initiate flash a code on the Simplicity Lite Control (see Table 30) or sent error message to the LCD Smart Equipment Control associated with errors within the system.

Reset

Remove the call for cooling, by raising thermostat setting higher than the conditioned space temperature. This resets any pressure or freezestat lockouts.

Field installed electric heating sequence of operations

The following sequence describes the operation of the electric heat section.

Single-stage heating (applies only to 5, 7 & 10 kW 230V heaters and to 7, 10, and 15 kW 460V and 575V heaters. All other heaters MUST use a two-stage thermostat):

a. Upon a call for heat by the thermostat, the heater sequencer (1S) will be energized. After completing the specified fan on delay for heating, the UCB will energize the blower motor.

b The thermostat will cycle the electric heat to satisfy the heating requirements of the conditioned space.

Two-stage heating (applies only to 15, 20 and 30 kW 230V heaters and 20 and 30 kW heater 460V and 575V heaters.):

a. Upon a call for first-stage heat by the thermostat, the heater sequencer (1S) (15, 20, 30 kW 230 volt) and contactor (2M) (20, 30 kW 460 and 575 volt) will be energized. After completing the specified fan on delay for heating, the UCB will energize the blower motor.

   If the second stage of heat is required, heater sequencer (2S) (12, 20, 30 kW 230 volt) or contactor (3M) (20, 30 kW 460 and 575 volt) will be energized. After completing the specified fan on delay for heating, the UCB will energize the blower motor.

b The thermostat will cycle the electric heat to satisfy the heating requirements of the conditioned space.

Electric heat operation errors

Temperature limit

If the UCB senses zero volts from the high temperature limit, the indoor blower motor is immediately energized.

This limit is monitored regardless of unit operation status, i.e. the limit is monitored at all times.

If the temperature limit opens three times within one hour, it will lock-on the indoor blower motor and a flash a code on the Simplicity Lite Control (See Table 30) or sent error message to the LCD Smart Equipment Control.

Safety controls

The UCB monitors the temperature limit switch of electric heat units.

The control circuit includes the following safety controls:

Temperature limit switch (TLS)

This control is located inside the heater compartment and is set to open at the temperature indicated in the Electric Heat Limit Setting Table 21. It resets automatically. The limit switch operates when a high temperature condition, caused by inadequate supply air flow occurs, thus shutting down the heater and energizing the blower.

Table 21: Electric heat limit setting

Voltage	kW	Temperature Limit Switch	Open Temperature °F
208-1-60	5	1	140
	7	1,3	140
	10	1,2,3	140
	15	2,4,6	140
	20	1,2,3,4,5	140
		6	150
	30	1,2,3,4,5,6	150
230-3-60	5	1,2,3	140
	7	1,2,3	140
	10	1,2,3	150
	15	2,4,6	140
	20	1,2,3,4,5,6	150
	30	1,3,5	160
		2,4,6	150
460-3-60	7	2,4,6	140
	10	2,4,6	140
	15	2,4,6	140
	20	3	160
	30	3	150
575-3-60	10	2,4,6	140
	15	2,4,6	140
	20	5	160
	30	5	150

Flash codes or error messages

The UCB will initiate a flash code associated with errors within the system. Refer to flash code on the Simplicity Lite Control (See Table 30) or sent error message to the LCD Smart Equipment Control.

Reset

Remove the call for heating by lowering the thermostat setting lower than the conditioned space temperature.This resets any flash codes.

Electric heat anticipator setpoints

It is important that the anticipator setpoint be correct. Too high of a setting will result in longer heat cycles and a greater temperature swing in the conditioned space. Reducing the value below the correct setpoint will give shorter “ON” cycles and may result in the lowering of the temperature within the conditioned space. Refer to Table 22 for the required electric heat anticipator setting.

Table 22: Electric heat anticipator setpoints

Heater Kw	Voltage	Setting, Amps	
		TH1	TH2
5	230-3-60	0.35	-
7		0.35	-
10		0.35	-
15		0.35	0.19
20		0.35	0.38
30		0.35	0.38

Table 22: Electric heat anticipator setpoints

Heater Kw	Voltage	Setting, Amps	
		TH1	TH2
7	460-3-60	0.35	-
10		0.35	-
15		0.35	-
20		0.37	0.29
30		0.37	0.29
10	575-3-60	0.35	-
15		0.35	-
20		0.37	0.29
30		0.37	0.29

Gas heating sequence of operations

When there is a W1 call for heat, the heat relay (RW1) is energized by the unit control board (UCB). The RW1-1 contacts immediately close energizing the ignition control board (ICB). The ICB checks the state of the flame sense circuit, the roll out switch, the centrifugal switch and the primary / auxiliary temperature limit switch circuit. If they are in the expected state, then the ICB energizes the draft motor and verifies that the centrifugal switch located on the end of the draft motor closes.

After the centrifugal switch closes, a 15 second heat exchanger purging period is completed. After this purging period, the ICB will simultaneously energize the pilot gas valve and the ignition coil. Once the flame sensor senses a pilot flame is present, the ignition coil is de-energized. The ICB checks for pilot flame stability and once the ICB is satisfied that the pilot flame is stable, the main gas valve is energized by the ICB. The UCB will energize the indoor blower after a 45 second delay from the call for heat. The ICB and UCB both monitor the furnace safety devices during the furnace operation.

When the call for heat is satisfied, the ICB closes the pilot and main gas valves and performs a 30 second purging of the heat exchanger by continuing the operation of the draft motor. The UCB continues the operation of the indoor blower for a configurable amount of time after the call for heat is satisfied.

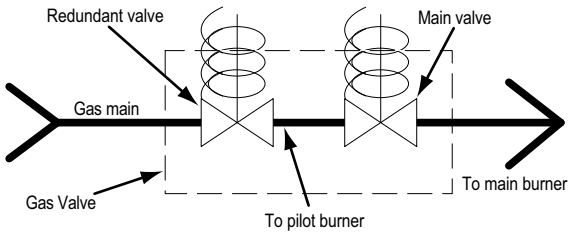

Figure 24: Gas valve piping

Gas heat operation errors

During furnace operation, the ICB monitors the flame sense circuit, the centrifugal switch, the primary limit switch and the roll out switch. If a signal from any of the inputs moves to a fault state, then the ICB immediately closes the pilot and main gas valves. The ICB will determine the device that is signaling a fault and flash a code for that device. A primary limit trip, centrifugal switch trip or flame sense fault triggers a temporary

lock out. An auxiliary limit or a roll out switch trip requires intervention to reset the ICB. The UCB also monitors the primary limit and gas valve.

Temperature limits

The primary limit is located such that the temperature sensitive switch can sense the temperature of the heat exchanger tubes. On single or two stage models the limit is mounted just above the inlet of the heat exchanger tubes on the right side. If a primary limit (LS) fault occurs (the primary limit opens due to excessive heat exchanger temperature), then the ICB will flash the appropriate code (Table 31) and monitor the primary limit. The UCB will energize the indoor blower and the ICB will energize the draft motor while the primary limit is open. When the primary limit closes and the call for heat still exists, the ICB will start the ignition sequence over and the UCB will de-energize the blower for 45 seconds. However, the auxiliary limit is in series with the primary limit and it takes first control. If the excessive heat has been high enough to cause the auxiliary limit (AUX) to open, then the ICB will flash the primary limit code but the furnace will not retry ignition during the same call for heat. The auxiliary limit is of the manual reset type and is mounted in the upper right hand corner of the panel between the burner manifold and the flue gas collector box just behind the draft motor. If the auxiliary switch has opened, then special attention should be paid to the primary limit as it may be faulty as well. However, the auxiliary switch is sized such that multiple trips of the primary limit due to complete blower failure will cause enough heat to build up and trip the auxiliary.

If the primary limit opens three times within one hour, then the UCB will lock on the indoor blower and flash a flash a code on the Simplicity Lite Control (Table 30) or sends error message to the LCD Smart Equipment Control.

Gas valve

The UCB monitors the gas valve (GV). Any time the UCB senses voltage at the GV without a call for heat for a continuous five-minute period, the UCB will lock on the indoor blower and flash a code on the Simplicity Lite Control (Table 30) or sends error message to the LCD Smart Equipment Control. When the UCB no longer senses voltage at the GV the UCB will de-energize the indoor blower after the expiration of the indoor blower heating off delay.

If the voltage has been sensed at the GV for at least 15 seconds during the fan on delay for heating and the UCB no longer senses voltage at the GV (W1 call for heat removed or an ICB fault exists), then the UCB forces the indoor blower on for the indoor blower heating off delay.

The gas valve is of the redundant type. If for any reason the main gas valve fails in the open position, then the redundant valve ahead of the main gas valve will shut off the flow of gas to both the pilot and main gas valves.

Centrifugal switch

The centrifugal switch is mounted on the end of the draft motor and it is an integral part of the motor assembly. On a call for heat, the ICB checks the centrifugal switch (CS) for open state before it energizes the draft motor. If it is closed, then the ICB will lock out the furnace and flash a code (Table 31). If open, then the ICB will energize the draft motor and verify that the switch closes before initiating the purging and ignition sequence. If at any time during furnace operation the centrifugal switch opens, then the ICB will de-energize the pilot and main gas valves and monitor the centrifugal switch. If the centrifugal switch closes and the call for heat still exists, then the ICB will retry the purging and ignition sequence.

Roll-out switch

This temperature sensitive switch is located in the burner vestibule just above the right hand side of the burner assembly. In the event of the flame spilling out into the burner manifold area the roll-out switch will open, the ICB will close both the main and pilot gas valves and flash a code (Table 31). The ICB will not retry the ignition sequence during the same call for heat.

Flame sense circuit

The flame sensor is mounted on the left hand side of the burner assembly and is positioned such that the pilot flame surrounds the tip of the sensor. On a call for heat the ICB checks for the flame sense circuit to be open. If open, then the ICB initiates the purging and ignition sequence. Once the pilot flame is present, the ICB monitors the flame sense circuit for pilot flame stability. If the pilot flame is unstable or lost completely, then the ICB will immediately close both the pilot and main gas valves. The ICB will retry the purging and ignition sequence. If the flame is unstable or lost more than 16 times during the same call for heat, then the ICB will lock out furnace operation for 5 minutes.

Table 23: Single stage gas heat limit control setting

Unit	Capacity, MBH		Limit control opens, °F	
(ton)	Input	Output	Direct drive	Belt drive
3	50	40	240	240
3	100	80	170	210
4	75	60	210	240
4	125	100	165	210
5	100	80	170	210
5	125	100	165	210
6	100	80	170	210
6	125	100	165	210

Flash codes or error messages

The UCB will initiate a flash code associated with errors within the system. Refer to flash a code on the Simplicity Lite Control (See Table 31) or sent error message to the LCD Smart Equipment Control.

Resets

Remove the call for heating by lowering the thermostat setting lower than the conditioned space temperature. This resets any lock outs.

Start-up (cooling)

Prestart check list

After installation has been completed:

1. Check the electrical supply voltage being supplied. Be sure that it is the same as listed on the unit nameplate.
2. Set the room thermostat to the off position.
3. Turn unit electrical power on.
4. Set the room thermostat fan switch to on.
5. Check indoor blower rotation.
   - If blower rotation is in the wrong direction. Refer to Phasing Section in general information section.
6. Check blower drive belt tension.
7. Check the unit supply air (CFM). See *Checking supply air CFM*.
8. Measure evaporator fan motor's amp draw.
9. Set the room thermostat fan switch to off.
10. Turn unit electrical power off.

Operating instructions

1. Turn unit electrical power on.
2. Set the room thermostat setting to lower than the room temperature.
3. Compressor will energize after the built-in time delay of 5 minutes.

Post start check list

1. Verify proper system pressures.
2. Measure the temperature drop across the evaporator coil.
3. Measure the system Amperage draw across all legs of 3 phase power wires.
4. Measure the condenser fan amp draw.

Shut down

1. Set the thermostat to highest temperature setting.
2. Turn off the electrical power to the unit.

Start-up (gas heat)

Pre-start check list

Complete the following checks before starting the unit.

1. Check the type of gas being supplied. Be sure that it is the same as listed on the unit nameplate.
2. Make sure that the vent and combustion air hoods have been properly installed.

Operating instructions

⚠ CAUTION

This furnace is equipped with an intermittent pilot and automatic re-ignition system. DO NOT attempt to manually light the pilot.

To light pilot and main burners:

1. Turn off electric power to unit.
2. Turn room thermostat to lowest setting.
3. Turn gas valve knob or switch to on position.
4. Turn on electric power to unit.
5. Set room thermostat to desired temperature. (If thermostat set temperature is above room temperature, pilot burner ignition will occur and, after an interval to prove pilot flame, main burners will ignite).

To shut down:

1. Turn off electric power to unit.
2. Depress knob of gas valve while turning to off position or position the switch to the off position.

Post-start check list (gas)

After the entire control circuit has been energized and the heating section is operating, make the following checks:

1. Check for gas leaks in the unit piping as well as the supply piping.

⚠ WARNING

FIRE OR EXPLOSION HAZARD

Failure to follow the safety warning exactly could result in serious injury, death or property damage.

Never test for gas leaks with an open flame. use a commercially available soap solution made specifically for the detection of leaks to check all connections. A fire or explosion may result causing property damage, personal injury or loss of life.

2. Check for correct manifold gas pressures. See *Checking gas input*.
3. Check the supply gas pressure. It must be within the limits shown on rating nameplate. Check supply pressure with all gas appliances in the building at full fire. At any time, the standby gas line pressure must not exceed 13 in. W.C. and the operating pressure must not drop below 5 in. W.C. for natural gas units. If the gas pressure is outside these limits, contact the local gas utility for corrective action.

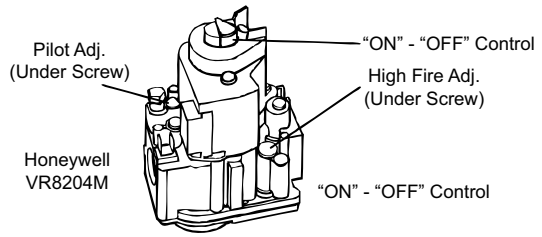

Figure 25: Honeywell VR8204M single stage gas valve

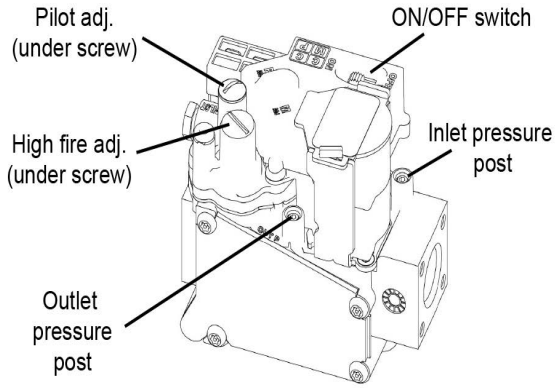

Figure 26: White Rodgers 36G32 single stage gas valve

Manifold gas pressure adjustment

Adjustments to the high-fire gas flow may be made by turning the pressure regulator adjusting screws on the automatic gas valve.

Note: This unit may include a White Rodgers gas valve. The inlet and outlet pressure posts on this valve do not require a special barbed fitting. To attach a manometer, loosen the screw inside the post 1 turn using a 3/32 in. hex wrench (the screw does not need to be removed), and insert a 5/16 in. I.D. hose directly over the post. Re-tighten the screw when complete.

Adjust as follows:

1. Remove the adjustment screw cap on the regulator.
2. To decrease the gas pressure, turn the adjusting screw counterclockwise.
3. To increase the gas pressure, turn the adjusting screw clockwise.
4. Replace adjustment screw cap.

Note: The factory set high-fire manifold pressure for these furnaces is 3.50 IWG. The actual manifold pressure depends on the local fuel heating value.

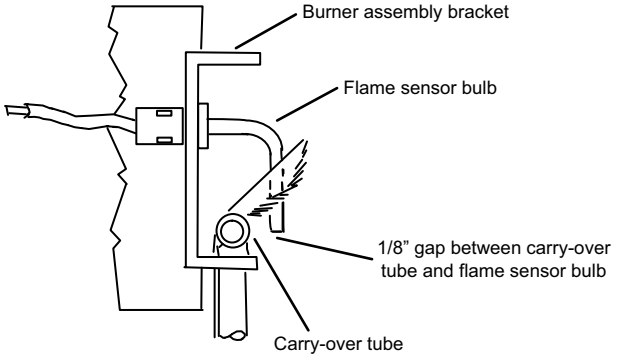

Figure 27: Proper flame adjustment

Pilot checkout

The pilot flame should envelope the end of the flame sensor. To adjust pilot flame, (1) remove pilot adjustment cover screw, (2) increase or decrease the clearance for air to the desired level, (3) be sure to replace cover screw after adjustment to prevent possible gas leakage.

Put the system into operation and observe through complete cycle to be sure all controls function properly.

Burner instructions

To check or change burners, pilot or orifices, **close the main manual shut-off valve and shut off all electric power to the unit.**

1. Remove the screws holding either end of the manifold to the burner supports.
2. Open the union fitting in the gas supply line just upstream of the unit gas valve and downstream from the main manual shut-off valve.
3. Remove the gas piping closure panel.
4. Disconnect wiring to the gas valves and spark ignitors. Remove the manifold-burner gas valve assembly by lifting up and pulling back.

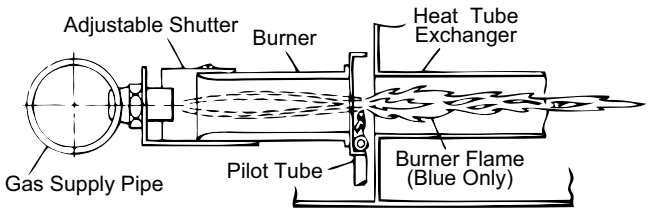

Figure 28: Typical flame appearance

Burners are now accessible for service.

Reverse the above procedure to replace the assemblies. Make sure that burners are level and seat at the rear of the heat exchanger.

Burner air shutter adjustment

Adjust burner shutters so no yellow flame is observed in the heat exchanger tubes.

Checking gas input

Natural gas

1. Turn off all other gas appliances connected to the gas meter.
2. With the furnace turned on, measure the time needed for one revolution of the hand on the smallest dial on the meter. A typical gas meter usually has a 1/2 or a 1 cubic foot test dial.
3. Using the number of seconds for each revolution and the size of the test dial increment, find the cubic feet of gas consumed per hour from the Gas Rate - Cubic Feet Per Hour. See Table 24.

If the actual input is not within 5% of the furnace rating (with allowance being made for the permissible range of the regulator setting), replace the orifice spuds with spuds of the proper size.

Note: To find the Btu input, multiply the number of cubic feet of gas consumed per hour by the Btu content of the gas in your particular locality (contact your gas company for this information - it varies widely from city to city.)

Table 24: Gas rate-cubit feet per hour[1]

Seconds for one rev.	Size of test dial	
	1/2 cu. ft	1 cu. ft
10	180	360
12	150	300
14	129	257
16	113	225
18	100	200
20	90	180
22	82	164
24	75	150
26	69	138
28	64	129
30	60	120
32	56	113
34	53	106
36	50	100
38	47	95
40	45	90
42	43	86
44	41	82
46	39	78
48	37	75
50	36	72
52	35	69
54	34	67
56	32	64
58	31	62
60	30	60

1. By actual measurement, it takes 38 seconds for the hand on the 1-cubic foot dial to make a revolution with a 100,000 Btuh furnace running. Using this information, located 38 seconds in the first column in the table above. Read across to the column headed “1 Cubic Foot”, where you will see that 95 cubic feet of gas per hour are consumed by the furnace at that rate. Multiply 95 X 1050 (the Btu rating of the gas obtained from the local gas company). The result is 99,750 Btuh, which is close to the 100,000 Btuh rating of the furnace.

Adjustment of temperature rise

The temperature rise (or temperature difference between the return air and the heated air from the furnace) must lie within the range shown on the rating plate and the data in the Gas Heat Application Table 11.

$$\text{CFM} = \frac{\text{Btuh Input x 0.8}}{108 \ x \ {}^{o}F \ Temp. Rise}$$

After the temperature rise has been determined, the cfm can be calculated as follows:

After about 20 minutes of operation, determine the furnace temperature rise. Take readings of both the return air and the heated air in the ducts (about six feet from the furnace) where they will not be affected by radiant heat. Increase the blower cfm to decrease the temperature rise; decrease the blower cfm to increase the rise. Refer to the In Door Blower Specification Table 18.

Start up for units equipped for FER

This section applies to single phase gas heat only.

Direct drive

Direct drive FER units come from the factory with the following three leads that lead to the indoor motor.

- A yellow cooling lead
- A red heating lead
- A white, fan only lead

Each lead is put on a different tap on the motor and provides different speeds. The leads are set on default taps from the factory. See the wiring diagrams for details on factory default speeds. During installation, you may need to move the leads to different taps depending on the airflow and static requirements of the application.

Note: During installation, the tap chosen for the heating speed must produce a temperature rise that lies within the rise range stated on the rating plate and the data in Table 11.

Belt drive

Belt drive FER units come with a VFD that provides heating, cooling, and fan only speeds. The units are controlled by a 2-10

vdc output from the Smart Equipment control to the supply fan VFD.

You may need to adjust the speeds for specific applications as factory defaults may not always be suitable. To make airflow changes, adjust the variable pitch sheave pulley. If pulley adjustments fail to achieve the required airflow, you may need to adjust the factory default speed settings for the Smart Equipment control, see *Adjusting the fan speed percentages*.

Note: During installation, the speed chosen for the heating speed must produce a temperature rise that lies within the rise range stated on the rating plate and the data in Table 11.

Adjusting the fan speed percentages

1. On the unit control board, use the joystick to select **Details**, **Fan**, **Setup** and press ENTER.

   or

   From the Mobile Access Portal (MAP) Gateway, select the indoor fan section.

2. Make the required changes to the fan speed commands. The following table shows available fan speed commands.

Table 25: Fan setup commands

Command	Adjustment	Setting
Fan Only-% Cmd	Adjust based on application	(CV IS Fan Only)
1ClgStg-% Cmd	Adjust based on application	(CV IS 1 Stg Cool)
1HtgStg-%Cmd	Adjust based on application	(Occupied: One Stage of Heat % Command)

Normal operating pressures

Table 26: KE036 (3.0 ton) operating pressures

Air Flow Indoor Db/Wb	Indoor DB/WB	Outdoor DB	Suction Pressure	Suction Temp.	Liquid Pressure	Liquid Temp.	Delta T Db	Entering Evap Db	Leaving Evap Db	Compressor Amps
300 Cfm/ton	80/62	75	123	53	259	80	-30	80	50	8
		85	128	48	305	92	-28	80	52	9
		95	133	48	351	103	-27	80	53	11
300 Cfm/ton	80/67	75	131	61	262	77	-25	80	55	8
		85	138	60	307	90	-24	80	56	9
		95	143	55	357	101	-22	80	58	11
300 Cfm/ton	80/72	75	140	67	270	75	-20	80	60	8
		85	147	66	316	87	-19	80	61	9
		95	154	67	361	99	-17	80	63	11
300 Cfm/ton	75/63	75	124	52	261	79	-24	75	51	8
		85	130	49	308	91	-23	75	52	9
		95	135	49	351	102	-21	75	54	10
400 Cfm/ton	80/62	75	128	61	258	78	-27	80	53	8
		85	134	57	301	90	-26	80	54	9
		95	139	52	352	102	-24	80	56	10
400 Cfm/ton	80/67	75	137	68	261	74	-22	80	58	8
		85	143	66	307	87	-21	80	59	9
		95	149	62	357	99	-20	80	60	11
400 Cfm/ton	80/72	75	145	73	272	74	-17	80	63	8
		85	153	72	314	85	-16	80	64	9
		95	159	70	364	97	-15	80	65	11
400 Cfm/ton	75/63	75	130	60	256	76	-21	75	54	8
		85	135	57	299	88	-20	75	55	9
		95	140	52	348	100	-19	75	56	10

Table 27: KE048 (4.0 Ton) operating pressures

Air Flow Indoor Db/Wb	Indoor DB/WB	Outdoor DB	Suction Pressure	Suction Temp.	Liquid Pressure	Liquid Temp.	Delta T Db	Entering Evap Db	Leaving Evap Db	Compressor Amps
300 Cfm/ton	80/62	75	123	62	276	79	-30	80	50	11
		85	127	55	324	91	-30	80	51	13
		95	133	47	379	103	-28	80	52	15
300 Cfm/ton	80/67	75	133	69	283	76	-26	80	54	11
		85	138	65	324	86	-25	80	55	13
		95	142	60	380	100	-23	80	57	15
300 Cfm/ton	80/72	75	141	73	296	76	-20	80	60	12
		85	148	72	343	88	-19	80	61	14
		95	154	69	395	99	-18	80	62	16
300 Cfm/ton	75/63	75	124	60	280	79	-25	75	50	11
		85	129	56	325	90	-24	75	51	13
		95	134	47	380	103	-22	75	53	16
400 Cfm/ton	80/62	75	127	67	277	77	-28	80	52	11
		85	134	63	328	90	-26	80	54	13
		95	140	58	381	102	-25	80	55	15
400 Cfm/ton	80/67	75	136	72	286	75	-23	80	57	12
		85	144	70	336	87	-21	80	59	13
		95	150	65	390	100	-20	80	60	16
400 Cfm/ton	80/72	75	146	75	298	75	-17	80	63	12
		85	153	75	348	87	-16	80	64	14
		95	160	73	402	99	-15	80	65	16
400 Cfm/ton	75/63	75	130	65	286	77	-21	75	54	12
		85	136	60	333	90	-20	75	55	13
		95	140	53	388	102	-19	75	56	16

Table 28: KE060 (5.0 ton) operating pressures

Air Flow Indoor Db/Wb	Indoor DB/WB	Outdoor DB	Suction Pressure	Suction Temp.	Liquid Pressure	Liquid Temp.	Delta T Db	Entering Evap Db	Leaving Evap Db	Compressor Amps
300 Cfm/ton	80/62	75	122	50	285	80	29	80	51	13
		85	125	51	334	88	28	80	52	15
		95	127	52	386	97	27	80	53	18
300 Cfm/ton	80/67	75	134	56	290	83	24	80	56	14
		85	136	56	338	91	23	80	57	16
		95	138	56	390	99	22	80	58	18
300 Cfm/ton	80/72	75	147	62	297	86	19	80	61	14
		85	149	62	344	93	18	80	62	16
		95	151	62	395	101	17	80	63	18
300 Cfm/ton	75/62	75	122	49	286	80	25	75	50	14
		85	124	50	334	88	24	75	51	16
		95	127	51	387	97	22	75	53	18
400 Cfm/ton	80/62	75	131	54	288	83	26	80	54	14
		85	133	54	336	91	25	80	55	15
		95	135	55	388	99	24	80	56	18
400 Cfm/ton	80/67	75	142	58	294	85	21	80	59	14
		85	144	58	341	92	20	80	60	16
		95	146	59	396	100	19	80	61	18
400 Cfm/ton	80/72	75	154	64	301	87	16	80	64	14
		85	156	64	347	94	15	80	65	16
		95	159	65	400	102	14	80	66	18
400 Cfm/ton	75/62	75	130	52	290	82	21	75	54	14
		85	131	53	337	89	20	75	55	16
		95	133	54	391	98	19	75	56	18

Table 29: KE072 (6.0 ton) operating pressures

Air Flow Indoor Db/Wb	Indoor DB/WB	Outdoor DB	Suction Pressure	Suction Temp.	Liquid Pressure	Liquid Temp.	Delta T Db	Entering Evap Db	Leaving Evap Db	Compressor Amps
300 Cfm/ton	80/62	75	129	58	304	137	-24	80	56	12.0
		85	128	54	352	148	-24	80	56	13.4
		95	128	50	399	159	-25	80	55	14.7
300 Cfm/ton	80/67	75	128	60	304	137	-24	80	56	12.0
		85	131	59	356	151	-23	80	57	13.5
		95	133	58	408	164	-22	80	58	15.0
300 Cfm/ton	80/72	75	127	62	305	137	-24	80	56	12.0
		85	132	64	361	153	-21	80	59	13.6
		95	138	66	416	169	-19	80	61	15.3
300 Cfm/ton	75/62	75	123	56	302	137	-21	75	54	11.9
		85	124	51	350	148	-21	75	54	13.3
		95	125	47	399	158	-21	75	54	14.8
400 Cfm/ton	80/62	75	134	58	304	133	-21	80	59	11.8
		85	135	57	353	146	-21	80	59	13.3
		95	136	55	402	158	-21	80	59	14.8
400 Cfm/ton	80/67	75	135	59	305	134	-21	80	59	11.9
		85	137	59	357	148	-20	80	60	13.4
		95	139	59	408	161	-19	80	61	14.9
400 Cfm/ton	80/72	75	135	60	307	134	-21	80	59	11.9
		85	138	62	360	149	-19	80	61	13.5
		95	141	64	413	164	-18	80	62	15.1
400 Cfm/ton	75/62	75	128	55	302	134	-19	75	56	11.8
		85	130	54	352	146	-18	75	57	13.3
		95	132	52	402	159	-18	75	57	14.8

Gas heat troubleshooting guide

⚠WARNING

Troubleshooting of components may require opening the electrical control box with the power connected to the unit. **Use extreme care when working with live circuits!** Check the unit nameplate for the correct line voltage and set the voltmeter to the correct range before making any connections with line terminals.

When not necessary, shut off all electric power to the unit prior to any of the following maintenance procedures so as to prevent personal injury.

⚠ CAUTION

Label all wires prior to disconnection when servicing controls. Wiring errors can cause improper and dangerous operation, which could cause injury to person and/or damage unit components. Verify proper operation after servicing.

⚠WARNING

The furnace may shut down on a high temperature condition during the procedure. If this occurs, the UCB energize the supply air blower motor until the high temperature limit has reset. Caution should be used at all times as the supply air blower may energize regardless of the room thermostat fan switch position.

Before beginning symptomatic troubleshooting activities read the flash code LEDs on the unit control board (UCB) and the ignition control board (ICB). Fault codes have a quick sequence of flashes indicating the flash code number followed by a pause with the LED off. The ICB flash codes are repeated until the fault is cleared. The ICB monitors itself, the centrifugal switch, lockout due to > 16 pilot flame losses, primary limit, roll-out and a flame present when the ICB expects no flame.

With power applied to the unit, if the LED on the ICB is flashing the heartbeat and the furnace will not operate, then proceed to the symptomatic troubleshooting section. If the ICB LED is not flashing, then perform the ICB troubleshooting procedures. If the ICB has a flash code other than the heartbeat, then determine the flash code and locate its troubleshooting procedures in the flash code troubleshooting section. Refer to Table 31 for flash code identification and component causing fault.

Flash code troubleshooting

Power to the unit should be interrupted during the troubleshooting of individual components unless otherwise indicated. All troubleshooting procedures assume the unit is wired per the wiring diagram. If there is any indication the unit has been previously repaired, then the first priority is to verify that the furnace is wired per the wiring diagram. Miss-wired units will give false flash codes.

Ignition control board

The ICB controls the ignition of the pilot, the opening and closing of the gas valves and the operation of the draft (inducer) motor. It also monitors all the furnace safety components.

If the ICB LED is on steady, then verify the wiring of the unit to the wiring diagram and if OK, then replace the ICB. If the unit has power and the ICB LED is not flashing, then remove the 3 pin connector (single stage gas heat) from the ICB. Measure the control voltage between terminals 1 and 2 of the wiring harness connector. The control voltage must be between 18 and 30 volts. If control voltage is not present, then check the 3.2A circuit breaker to verify that the circuit breaker has control voltage on both input and output terminals. If control voltage is present on the input and not the output of the circuit breaker, then reset or replace the circuit breaker as necessary. If control voltage is present on both sides of the circuit breaker, then check the power and common wires between the unit control box and the ICB and repair as necessary. I

f the control voltage is present, then verify the cleanliness of the harness and the ICB connector, clean if necessary and reconnect the wiring harness to the ICB and observe ICB LED. If it now flashes the heartbeat, then the fault was a bad connection between the harness connector and the ICB connector or a broken wire exists in the harness. With the harness connected to the ICB, gently move the wires in the harness while observing the ICB LED. If heartbeat is steady, then verify proper operation of the furnace. If the ICB does not flash the heartbeat, then gently move the wires in the harness connector while observing the ICB LED. If you get any flashes of the ICB LED, then there is still a bad connection or a broken wire. If no flashes are seen while gently moving the wires with the harness connected to the ICB, then replace the ICB and verify proper operation of the furnace.

Centrifugal switch

The centrifugal switch is an integral part of the draft motor. The centrifugal switch closes when the motor speed increases to ~2500 rpm and opens when the motor speed descends to ~2000 rpm.

If a flash code indicates the centrifugal switch is causing a fault, then

1. If the flash code indicates the switch is open with the draft (inducer) motor on (flash code 2), then
   a. Disconnect power to the unit. Using a screw driver, spin the draft motor blower wheel. If bound or dragging, then visually inspect the draft motor blower wheel area for debris. If debris is present, then clear debris and verify proper furnace operation. If clear, then replace the draft motor and verify proper furnace operation.
   b. Restore power to unit and induce a call for heat. Measure the voltage across the two draft motor leads (white and red on single stage models). If it is less than

177 volts, then check and repair the power circuit to the draft motor. If the voltage is greater than 176 volts and the draft motor is not turning, then disconnect power and draft motor power leads. Measure the resistance of the draft motor windings. If an open circuit exists in the motor, then replace the draft motor. If the voltage is greater than 176 volts and the motor is turning, then check the centrifugal switch wiring between the ICB and the draft motor. If OK, then disconnect power to the unit and place the gas valve in the off position. Prepare to temporarily jumper the wires connected to terminals 3 and 8 of the ICB 9 pin harness connector by disconnecting the draft motor leads from the 9 pin harness. Restore the power to the unit and induce a call for heat. Jumper wires 3 and 8. If the ignition sequence is started after 15 seconds (audible sparking of the igniter), then replace the draft motor reconnecting the centrifugal switch wiring per the wiring diagram. If not, then replace the ICB, remove the jumper and reconnect the centrifugal switch wiring per the wiring diagram. Place the gas valve in the on position and verify proper furnace operation.

2. If the flash code indicates the switch is closed with the draft (inducer) motor off (flash code 3), then disconnect the 9 pin connector from the ICB and measure the continuity of the centrifugal switch with a battery powered test light or an ohm meter between terminals 3 and 8 of the harness connector. If a closed circuit is indicated, then check the wiring between the ICB and the draft motor. If the wiring is not shorted together, then replace the draft motor. If an open circuit is indicated, then reconnect the 9 pin wiring harness to the ICB and remove power to the unit for at least 20 seconds. Restore power to the unit. If the ICB continues to flash a code 3, then replace the ICB.

Pilot flame lockout

The ICB counts the number of flame losses during the same call for heat. If more than 16 flame losses occur within the same call for heat, then the control temporarily locks out furnace operation for 5 minutes (flash code 5). If the call for heat remains after the 5 minutes, then the ICB will retry the ignition sequence. The flame losses can be due to low inlet pressure, debris around flame sensor, plugged pilot burner, soot on the surface of the flame sensor or misadjusted pilot pressure. Remove the power to the unit for 20 seconds and then restore power to the unit. Induce a call for heat and observe the pilot flame in the flame sensor area to determine the best course of action.

1. If the flame is strong and stable in the flame sensor area, then verify the position of the flame sensor per the start up procedures. If ok, then remove the flame sensor and check the cleanliness of the electrode. If clean, then replace the flame sensor and adjust pilot per the start up procedures. If not clean, then clean, reinstall and adjust pilot per the start up procedures.
2. If the flame is weak or unstable in the flame sensor area, then verify the gas inlet pressure. If gas inlet pressure is above the minimum inlet pressure stated on unit data label, then adjust the pilot pressure per the start up procedures. If the pilot cannot be adjusted to obtain a strong and stable flame in the flame sensor area, then remove the burner assembly and verify the pilot burner assembly is open internally and the holes in the burner are clean. Check the pilot orifice size to the unit data plate and the cleanliness of the pilot orifice. Verify that the flame sensor electrode is clean and is adjusted properly. After cleaning or replacement of the pilot assembly components, reinstall the burner assembly and adjust pilot per the start up procedure.

Primary or aux temperature limit

The temperature limits limit the temperature in the furnace to a safe level. If a temperature higher than the preset limit is achieved due to low or no air flow through the furnace, then the temperature limits opens and the ICB closes the gas valve and flashes code 6. The primary limit is automatic reset type while the auxiliary limit is manual reset type. If either one opens, then the ICB removes power to the gas valve and the UCB energizes the indoor blower until the primary limit automatically resets or the auxiliary limit is manually reset. Verify adequate air flow through the furnace. If air flow is nonexistent or weak, then troubleshoot and repair the conditioned space air circulation system as necessary. Reset the auxiliary limit and verify proper operation of the furnace. If airflow is normal, then verify the gas input rate to the furnace following the start up procedures (auxiliary limit must be reset before the furnace will operate). If after verifying the circulating air system, the input rate to the furnace and that the air temperature rise through the furnace is within the rise range on the unit data plate the flash code still exists, then set the gas valve to the off position and temporarily apply control voltage (~24 V) to pin 9 of the 9 pin ICB connector. With power applied to the unit, if the ICB LED continues to flash a code 6, then replace the ICB and return unit to operation (you must remove the temporary voltage to pin 9 before the gas valve is turned on). If the ICB LED flashes a heartbeat, then replace the limit that is opening, remove the temporary voltage applied to pin 9, turn on the gas valve, restart the furnace and verify proper operation of the furnace.

Roll-out switch

The roll-out switch is installed to protect the furnace from damage due to excessive heat in the burner area. There are 4 main reasons the roll-out switch will open (flash code 7) due to excessive heat in the burner area. You must remove power to the unit for 20 seconds to reset the ICB.

1. A blocked flue outlet is the most common cause for the roll-out switch to open. Check the flue outlet for debris and clear if necessary.
2. Loose blower wheel on draft motor. Verify that the blower wheel is securely fastened to the draft motor shaft
3. Unit operating outside the air temperature rise range stated on the unit data plate. Either the air flow through the furnace is not sufficient or the gas input rate to the furnace exceeds the recommended rate. Verify both conditions are within the published ranges.
4. Cracked heat exchanger tube(s). If a heat exchanger tube or tubes is cracked, then the flow through the heat exchanger is restricted and the flame will either roll out of the tube inlet or heat will build to an abnormal level in the burner area.

This can usually be determined by observing burner flame with and without indoor blower operation. If the flame changes when the blower is running compared to when it is not, then visually inspect the heat exchanger tubes.

If all of the above are found to be in good condition or within the operating ranges, then set the gas valve to the off position and temporarily apply control voltage (~24 V) to pin 6 of the 9 pin ICB connector. With power applied to the unit, if the ICB LED continues to flash a code 7, then replace the ICB and return unit to operation (you must remove the temporary voltage to pin 6 before the gas valve is turned on). If the ICB LED flashes a heartbeat, then replace the roll-out switch, remove the temporary voltage applied to pin 6, turn on the gas valve, restart the furnace and verify proper operation of the furnace.

Unexpected flame presence

If a flame is present without a call for heat (flash code 8), then the ICB will continue operation of the draft motor and the UCB will call for indoor operation when either of the temperature limit opens. If the unit is correctly wired and there is not a call for heat, then check for control voltage to the gas valve. If control voltage exists at the gas valve, then replace the ICB. If voltage is not present at the gas valve, then replace the gas valve.

Gas valve stuck off or on

If the pilot and/or the main valves are sensed to be off more than 1 second when commanded to be on, the control will shut off all outputs and enter a hard lockout (flash code 9). Likewise, if the pilot and/or the main valves are sensed to be on more than 1 second when commanded to be off, the control will shut off all outputs and enter a hard lockout (flash code 9). The control will not respond to thermostat demands during a hard lockout. The only way to recover from a hard lockout is to remove and reapply 24VAC power to the control.

Flame sense circuit failure

If the control detects an internal hardware failure in the flame sense circuit, it shuts off all outputs and enters a hard lockout (flash code 10). The control will not respond to thermostat demands during a hard lockout. The only way to recover from a hard lockout is to remove and reapply 24VAC power to the control. If problem persists after removal and reapplication of 24VAC power, the board may need to be replaced.

Symptomatic troubleshooting

On calls for heating, the draft motor operates and the furnace lights but the supply air blower motor does not energize after a short delay (the room thermostat fan switch is in AUTO position).

1. Place the thermostat fan switch in the “ON” position. If the supply air blower motor energizes, go to Step 10.
2. If the supply air blower motor does not energize when the fan switch is set to “ON,” check that line voltage is being supplied to the contacts of the M2 contactor, and that the contactor is pulled in. Check for loose wiring between the contactor and the supply air blower motor.
3. If M2 is pulled in and voltage is supplied at M2, lightly touch the supply air blower motor housing. If it is hot, the motor may be off on inherent protection. Cancel any thermostat calls and set the fan switch to AUTO, wait for the internal overload to reset. Test again when cool.
4. If M2 is not pulled in, check for 24 V at the M2 coil. If 24 V is present at M2 but M2 is not pulled in, replace the contactor.
5. Failing the above, if there is line voltage supplied at M2, M2 is pulled in, and the supply air blower motor still does not operate, replace the motor.
6. If 24 V is not present at M2, check that 24 V is present at the supply air blower motor terminal on the UCB. If 24 V is present at the UCB terminal, check for loose wiring between the UCB and M2.
7. If 24 V is not present at the UCB supply air blower motor terminal, check for 24 V from the room thermostat. If 24 V is not present from the room thermostat, check for the following:
   a. Proper operation of the room thermostat (contact between R and G with the fan switch in the “ON” position and in the AUTO position during operation calls).
   b. Proper wiring between the room thermostat and the UCB.
   c. Loose wiring from the room thermostat to the UCB.
8. If 24 V is present at the room thermostat but not at the UCB, check for proper wiring between the thermostat and the UCB, i.e. that the thermostat G terminal is connected to the G terminal of the UCB, and for loose wiring.
9. If the thermostat and UCB are properly wired, replace the UCB.
10. If the blower motor runs with the fan switch in the “ON” position but does not run shortly after the furnace has ignited when the fan switch is in the AUTO position, check the room thermostat for contact between R and G during W1 calls.

On calls for heating, the supply air blower operates but the draft motor does not (the room thermostat fan switch is in the AUTO position).

1. The draft motor has inherent protection. If the motor shell is hot to the touch, wait for the internal overload to reset.
2. If the motor shell is cold with the room thermostat calling for heat, check if 24 V is present at the room thermostat but not at the UCB, check for proper wiring between the thermostat and the UCB, i.e. that the thermostat “W1” terminal is connected to the “W1” terminal of the UCB, and for loose wiring.
3. The draft motor is a 230 Vdraft motor on all models regardless of unit supply voltage. If the ICB is flashing a code other than the heartbeat, then troubleshoot the device indicated by the fault code. If not, then remove power to the unit for more than 20 seconds. If upon restoring the power to the unit the draft motor does not start with a call for heat, then verify that terminal “L1” of the ICB has a minimum of

120 volts to ground on 230 and 460 volt models or a minimum of 18 volts to ground on 575 volt models. If terminal “L1” does not have the minimum voltage, then check the wiring between the unit control box and the ICB on all models and on 460 volt models, the transformer in the gas heat compartment and its wiring. If terminal “L1” does have the minimum voltage, then check for the minimum voltage on terminal “IND” of the ICB on single stage models and terminal “IND HIGH” of the ICB on two stage models. If voltage is not present at the terminal, then verify wiring between the control box and the ICB. If all wiring is intact, then ICB is at fault. If voltage is present at the terminal on 230 and 460 volt models, then the draft motor is at fault. On 575 volt models, if voltage is present at the terminal, then check the draft motor relay (DMR on single stage gas heat) mounted above the ICB. First verify that the relay is pulled in by visual inspection. If not, then verify the minimum voltage is present between terminals “A” and “B” of the relay. If the minimum voltage is not present, then check the wiring. If it is present, then verify that a minimum of 150 volts is present at terminals “6” and “8” of the draft motor relay. If not present at terminal “8” of the draft motor relay, then troubleshoot the transformer in blower section and its wiring. If present at terminal “8” and not at terminal “6” of the draft motor relay, then the relay is at fault. If the minimum voltage is present at terminal 6 of the draft motor relay, then the draft motor is at fault.

The igniter sparks at the pilot burner but the pilot does not ignite and a gas odor is detected at the draft motor outlet.

1. Adjust the pilot adjust screw on the gas valve as described in *Pilot checkout*.
2. Check the supply pressure as described in *Post start check list*. Make adjustments as necessary.
3. Check the pilot orifice and pilot burner for obstruction as described in paragraph above. Clean as needed but the problem should not be the gas valve.

The pilot burner ignites but the igniter continues to spark and the main burners do not ignite.

1. Make the same checks and adjustment as described in *Pilot checkout*.
2. Check the supply pressure as described in *Post start check list*. Make adjustments as necessary.
3. Make sure that the pilot burner is not bent or damaged.
4. Make sure that the ground connections at the pilot burner, gas valve and ignition control are intact. Check the igniter wire for good electrical connection. If all are intact, replace the ignition control.

The pilot burner lights and the spark stops but the main burners do not light.

1. Check electrical connections between the ignition control and the gas valve. If intact, check for 24 V across terminals MV and GROUND terminals. If no voltage detected, replace ignition control. If voltage is present, replace gas valve.

Main burners light but exhibit erratic flame characteristics.

1. Adjust air shutters as described in *Burner air shutter adjustment*.
2. Check the main burner orifices for obstruction and alignment. Removal procedure is described in *Burner instructions*. Clean or replace burner orifices and burners as needed.

Smart Equipment Control Board navigation components

You need the following components to access the control points in the Smart Equipment control.

Note: Installation and operation guides are available from your equipment dealer or distributor.

1. Local LCD on Unit Control Board.
2. Tools to interact with the UCB. Choose from the following options:

a.

- Connected Workflow app (CWa) (available for iOS or Android)

Note: You can connect the CWa to the controller via bluetooth through the Connected Workflow Converter (CWCVT) or directly to the UCB if the controller has a communication card.

- CWCVT Wireless MS/TP Converter User Guide, literature part no. 12014120
- Connected Workflow Applications User Guide, literature part no. 12014106

Figure 29: CWCVT (S1-TL-CWCVT-0)

b. Mobile Access Portal (MAP) Gateway (portable)

- Source 1 part no. S1-YK-MAP1810-0P (no longer available for purchase).

Note: Although the MAP is no longer available for purchase, it continues to work with the UCB. The MAP does not receive firmware updates, so as additional points are added to the UCB those points will not render properly. However, the MAP will continue to work for the majority of typical applications.

- MAP Gateway Quick Start Guide, part no. 24-10737-16
- MAP Gateway Instruction, part no. 24-10737-8

For more information on the Smart Equipment unit control board navigation and operation, refer to the *Smart Equipment Quick Start Guide* and the *Smart Equipment Controls Sequence of Operation Overview*, literature part no. 12011950.

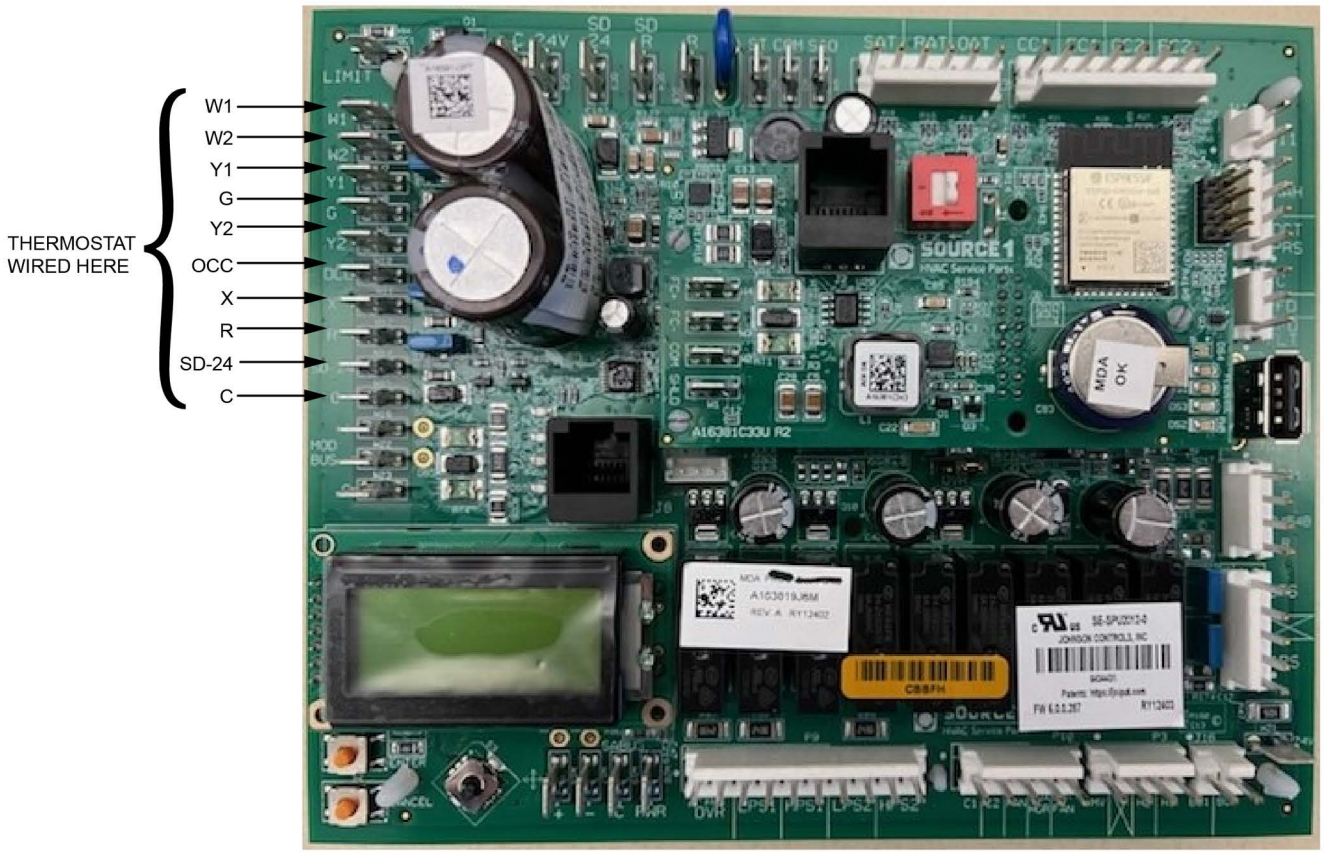

Figure 30: Smart Equipment Unit Control Board

Table 30: Smart Equipment UCB details

Description		Function and comments
Terminal Directional orientation: viewed with silkscreen labels upright		
Limit, 24 VAC power and shutdown connections from unit wiring harness at left on upper edge of UCB		
LIMIT	Monitored 24 VAC input through heat section limit switch(es)	If voltage is absent, indicating the heat section is over-temperature, the UCB will bring on the indoor blower
C	24 VAC, 75 VA transformer Common referenced to cabinet ground	Connects through circuit traces to thermostat connection strip C and indoor blower VFD pin C
24V	24 VAC, 75 VA transformer hot	Powers the UCB microprocessor, connects through circuit trace to the SD 24 terminal
SD 24	24 VAC hot out for factory accessory smoke detector, condensate overflow and/or user shutdown relay switching in series	Connects through circuit trace to thermostat connection strip SD-24. A wiring harness jumper plug connecting SD 24 to SD R is in place if factory accessories for unit shutdown are not used - this jumper plug must be removed if the switching of field-added external accessories for unit shutdown are wired between thermostat connection strip SD-24 and R
SD R	24 VAC hot return from factory accessory smoke detector, condensate overflow and user shutdown relay switching in series	Connects through circuit trace to the R terminal on the upper left of the board

Table 30: Smart Equipment UCB details (Continued)

Description		Function and comments
R	24 VAC hot for switched inputs to the UCB	Connects through circuit trace to the thermostat connection strip R terminal, right FAN OVR pin, right HPS1 pin, right HPS2 pin, lower DFS pin and lower APS pin
Terminal Thermostat connection strip on left edge of UCB		
W1	1st stage heating request, 24 VAC input switched from R	Not effective for cooling-only units
W2	2nd stage heating request, 24 VAC input switched from R	Not effective for cooling-only units or units with single-stage heat sections
Y1	1st stage cooling request, 24 VAC input switched from R	
Y2	2nd stage cooling request, 24 VAC input switched from R	Visible in the display menu when the #ClgStgs parameter is set for 2 or more, also effective for economizer free cooling supply air temperature reset when the #ClgStgs parameter is set for 1 or more
G	Continuous indoor blower request, 24 VAC input switched from R	
OCC	Occupancy request, 24 VAC input switched from R	Must have the OccMode parameter set for External to be effective
X	Hard lockout indicator, 24 volt output to a light thermostat LED	
R	24 VAC hot for thermostat switching and power	If field-added external accessories for unit shutdown are used, 24 VAC hot return from smoke detector, condensate overflow and/or user shutdown relay switching in series
SD-24	If field-added external accessories for unit shutdown are used, 24 VAC hot out for smoke detector, condensate over- flow and/or user shutdown relay switching in series	Unit wiring harness jumper plug for factory shutdown accessories must be removed if the switching of field-added external accessories for unit shutdown are wired between thermo- stat connection strip SD-24 and R
C	24 VAC common for thermostat power	
LEDs on left edge of UCB		
POWER	Green UCB power indicator	Lit indicates 24 VAC is present at C and 24V terminals
FAULT	Red hard lockout, networking error and firmware error indicator	1/2 second on/off flashing indicates one or more alarm is currently active, 1/10th second on/off flashing indicates a networking error (polarity, addressing, etc.) or a firmware error (likely correctable with re-loading from USB flash drive)
SA BUS	Green UCB SA bus communication transmission indicator	Lit/flickering indicates UCB SA bus communication is currently active, off indicates the UCB is awaiting SA bus communication
Terminal Space temperature sensor connections at center on upper edge of UCB		
ST	Space Temperature sensor input from 10KΩ @ 77°F, Type III negative temperature coefficient thermistor	Positive of VDC circuit (3.625 VDC reading to COM with open circuit), effective if “Thermo- stat-only Control” parameter is set OFF, space sensor override momentary shorts ST to COM to initiate/terminate temporary occupancy
COM	Common for ST and SSO inputs	Negative of VDC circuit for ST and SSO inputs
SSO	Space Sensor Offset input from 0 to 20KΩ potentiometer	Positive of VDC circuit (3.625 VDC reading to COM with open circuit), 10KΩ/2.5 VDC is 0°F offset, 0Ω/0 VDC is maximum above offset and 20KΩ/3.4 VDC is maximum below offset from active space temperature setpoint

Table 30: Smart Equipment UCB details (Continued)

Description		Function and comments
Pin Temperature sensor connections at right on upper edge of UCB		
SAT+	Supply Air Temperature sensor input from 10KΩ @ 77°F, Type III negative temperature coefficient thermistor	Input required for operation; 3.625 VDC reading SAT+ to SAT– with open circuit. Used in heat/cool staging cutouts, free cooling operation, demand ventilation operation, comfort ventilation operation, economizer loading operation, VAV cooling operation, hydronic heat operation.
RAT+	Return Air Temperature sensor input from 10KΩ @ 77°F, Type III negative temperature coefficient thermistor	Input required for operation; 3.625 VDC reading RAT+ to RAT– with open circuit. Used in return air enthalpy calculation. Substitutes for space temperature if no other space temperature input is present.
OAT+	Outside Air Temperature sensor input from 10KΩ @ 77°F, Type III negative temperature coefficient thermistor	Input required for operation but may be a communicated value; 3.625 VDC reading OAT+ to OAT– with open circuit. Used in heat/cool cutouts, low ambient cooling determination, dry bulb free cooling changeover, outside air enthalpy calculation, economizer loading operation, heat pump demand defrost calculation.
CC1+	#1 refrigerant circuit Condenser Coil temperature sensor input from 10KΩ @ 77°F, Type III negative temperature coefficient thermistor	Input required for heat pump units, not required for A/C units; 3.625 VDC reading CC1+ to CC1– with open circuit. Used in heat pump demand defrost calculation.
EC1+	#1 refrigerant circuit Evaporator Coil temperature sensor input from 10KΩ @ 77°F, Type III negative temperature coefficient thermistor	Input required for operation; 3.625 VDC reading EC1+ to EC1– with open circuit. Used in suction line temperature safety.
CC2+	#2 refrigerant circuit Condenser Coil temperature sensor input from 10KΩ @ 77°F, Type III negative temperature coefficient thermistor	Input required for 2-compressor heat pump units, not required for 2-compressor A/C units, not active for 1-compressor units; 3.625 VDC reading CC2+ to CC2– with open circuit. Used in heat pump demand defrost calculation.
EC2+	#2 refrigerant circuit Evaporator Coil temperature sensor input from 10KΩ @ 77°F, Type III negative temperature coefficient thermistor	Input required for operation of 2-compressor units, not active for 1-compressor units; 3.625 VDC reading EC2+ to EC2– with open circuit. Used in suction line temperature safety.
Pinned connections on right edge of UCB		
RAH+	Return Air Humidity input from 0-10 VDC @ 0-100% RH sensor	Input required for reheat units, optional in all other units, may be a communicated value. Used in return air enthalpy calculation, temperature/humidity setpoint reset, reheat operation.
DCT PRS+	Supply Duct Pressure input from 0-5 VDC @ 0-5" w.c. sensor	Input required for variable air volume units. Used in VAV indoor blower operation.
DFS (upper pin)	24 VAC hot return from Dirty Filter Switch	Optional input; switch closure for greater than 15 seconds during indoor blower operation initiates a notification alarm
DFS (lower pin)	24 VAC hot out for Dirty Filter Switch	Connects through circuit trace to the R terminal
APS (upper pin)	24 VAC hot return from Air Proving Switch	When this optional input is enabled: the air proving switch must close within 30 seconds of initiation of indoor blower operation and not open for greater than 10 seconds during in- door blower operation to allow heat/cool operation and prevent an "APS open" alarm; the air proving switch must open within 30 seconds of termination of indoor blower operation to prevent an "APS stuck closed" notification alarm
APS (lower pin)	24 VAC hot out for Air Proving Switch	Connects through circuit trace to the R terminal
C	Common for the VFD output	Negative of the VDC circuit for the VFD output

Table 30: Smart Equipment UCB details (Continued)

Description		Function and comments
VFD	2-10 VDC (0-100%) output for the indoor blower Variable Frequency Drive	Output is active with indoor blower operation. For CV units: this output provides stepped IntelliSpeed control of the indoor blower VFD based on fan-only, cooling stage and heating stage outputs. For VAV units: this output provides control of the indoor blower VFD based on supply duct static pressure input and setpoint.
VFDFLT	24 VAC hot input from the normally open VFD alarm contact	The VFD alarm contact switches from R within the unit wiring harness. 24 VAC input results in unit shutdown and a “VFD fault” alarm
Terminal at lower right corner of UCB		
24V FOR OUTPUTS	24 VAC hot for H1, H2, CN-FAN, AUX HGR, FAN C1 and C2 output relay contact switching	Output relay circuitry is isolated from other UCB components and the 24 VAC hot source may be from a second transformer in the unit
Pin Heat section connections at right on lower edge of UCB		
H1	24 VAC hot output for heat section stage 1	Not effective for cooling-only units. Output if demand is present and permissions allow one stage or two stages of heat section operation
H2	24 VAC hot output for heat section stage 2	Not effective for cooling-only units or units with single-stage heat sections. Output if demand is present and permissions allow two stages of heat section operation
MV	24 VAC hot input confirming heat section operation	Sourced from gas valve in gas heat units or first stage heat contactor in electric heat units. Input within 5 minutes from initiation of H1 output initiates the “Heat On Fan Delay” timer, loss of input following the termination of H1 output initiates the “Heat On Fan Delay” timer, no input within 5 minutes from initiation of H1 output initiates an “Ignition Failure” alarm, input for longer than 5 minutes without H1 output initiates a “Gas Valve Mis-wire” alarm
Pin Cooling and fan output connections at right on lower edge of UCB		
CN-FAN	24 VAC hot output for the condenser fan contactor coil	Output with either C1 or C2 output; interrupted during defrost cycle for heat pump units
AUX HGR	24 VAC hot output for hot gas reheat components	Effective only for reheat units, output with reheat operation
FAN	24 VAC hot output for indoor blower contactor coil/ indoor blower VFD enable relay coil	Output with heat/cool operation, G input or schedule demand
C1	24 VAC hot output for compressor 1	If demand is present and permissions allow compressor 1 operation; output with compressor cooling, comfort ventilation cooling, reheat or heat pump heating demands
C2	24 VAC hot output for compressor 2	Not effective for one stage compressor UCBs. If demand is present and permissions allow compressor 2 operation; output with compressor cooling, comfort ventilation cooling or heat pump heating demands
Pin Refrigerant circuit safety switch and indoor blower overload connections at center on lower edge of UCB		
HPS1 (right pin)	24 VAC hot out for refrigerant circuit 1 High Pressure Switch	Connects through circuit trace to the R terminal
HPS1 (left pin)	24 VAC hot return from refrigerant circuit 1 High Pressure Switch	Input is only considered if C1 output is needed; input must be present to allow C1 output. Three HPS1 trips in a two hour period cause a “High Pressure Switch 1 Lockout” and C1 output is then prevented until alarm reset. Connects through circuit trace to the right LPS1 pin.
LPS1 (right pin)	24 VAC hot out for refrigerant circuit 1 Low Pressure Switch	Connects through circuit trace to the left HSP1 pin

Table 30: Smart Equipment UCB details (Continued)

Description		Function and comments
LPS1 (left pin)	24 VAC hot return from refrigerant circuit 1 Low Pressure Switch	Input is only considered after 30 seconds of C1 output; afterwards, input must be present to allow C1 output. Three LPS1 trips in a one hour period cause a “Low Pressure Switch 1 Lockout” and C1 output is then prevented until alarm reset.
HPS2 (right pin)	24 VAC hot out for refrigerant circuit 2 High Pressure Switch	Not effective for one stage compressor UCBs. Connects through circuit trace to the R terminal
HPS2 (left pin)	24 VAC hot return from refrigerant circuit 2 High Pressure Switch	Not effective for one stage compressor UCBs. Input is only considered if C2 output is needed; input must be present to allow C1 output. Three HPS2 trips in a two hour period cause a “High Pressure Switch 1 Lockout” and C2 output is then prevented until alarm reset. Connects through circuit trace to the right LPS2 pin.
LPS2 (right pin)	24 VAC hot out for refrigerant circuit 2 Low Pressure Switch	Not effective for one stage compressor UCBs. Connects through circuit trace to the left HSP2 pin
LPS2 (left pin)	24 VAC hot return from refrigerant circuit 2 Low Pressure Switch	Not effective for one stage compressor UCBs. Input is only considered after 30 seconds of C2 output; afterwards, input must be present to allow C2 output. Three LPS2 trips in a one hour period cause a “Low Pressure Switch 2 Lockout” and C2 output is then prevented until alarm reset.
FAN OVR (right pin)	24 VAC hot out for indoor blower FAN Overload relay contact/motor protector switch	Connects through circuit trace to the R terminal
FAN OVR (left pin)	24 VAC hot return from indoor blower FAN Overload relay contact/motor protector switch	Input is only considered if FAN output is needed; input must be present to allow FAN output and unit operation. One FAN OVR trip lasting longer than 5 minutes or three FAN OVR trips in a two hour period cause a “Fan Overload Lockout” and unit operation is then prevented until alarm reset.
Terminal SA BUS[1] connections on at left on lower edge and center of UCB		
PWR	Power for SA (“Sensor-Actuator”) BUS devices	Also incorporated in the J8 6-pin phone jack connector at the left-center of the board. Positive of the 15 VDC (reading to C) circuit for powering an optional netstat and/or Multi Touch gateway
C	Common for SA BUS power and communication circuits	Also incorporated in the J8 6-pin phone jack connector at the left-center of the board. Negative of the SA BUS circuits
–	Communication for SA BUS devices	Also incorporated in the J8 6-pin phone jack connector at the left-center of the board. Positive of the VDC (typically, a fluctuating 1.5 to 3.5 volts reading to C; at least 0.25 volts lower than +) SA BUS communication circuit to optional economizer board, 4-stage board, fault detection & diagnostics board, netstat and/or Multi Touch gateway
+	Communication for SA BUS devices	Also incorporated in the J8 6-pin phone jack connector at the left-center of the board. Positive of the VDC (typically, a fluctuating 1.5 to 3.5 volts reading to C; at least 0.25 volts higher than –) SA BUS communication circuit to optional economizer board, 4-stage board, fault detection & diagnostics board, netstat and/or Multi Touch gateway
J8	6-pin phone jack connector	Incorporates the SA BUS terminals for convenience/alternate connection of SA BUS devices, primarily used for temporary service connection of the Multi Touch gateway

Table 30: Smart Equipment UCB details (Continued)

Description		Function and comments
Item Integrated user interface at lower left corner of UCB		
Display	On-board, 2-line x 8-character back-lit display	On-board display, buttons and joystick allow access to UCB, economizer, 4-stage and FDD board parameters
ENTER	Button for display menu acknowledgment and navigation	
CANCEL	Button for display menu navigation and zeroing of active compressor ASCD timer	
JOY	4-way Joystick for display menu navigation	
Item USB connector at right of UCB		
J10	Type A female Universal Serial Bus connector	Used for backup, restoration, & copying of board parameters as well as board software updating through a flash drive
J15	Factory wired SA Bus connector	
Optional communication sub-board at center of UCB		
Terminal FC BUS[1] connections on left edge of the communication board		
FC+	FC (“Field Connected”) BUS BACnet MSTP communication	Positive of the VDC (typically, a fluctuating 1.5 to 3.5 volts reading to COM; at least 0.25 volts higher than –) FC bus BACnet MSTP communication circuit
FC–	FC (“Field Connected”) BUS BACnet MSTP communication	Positive of the VDC (typically, a fluctuating 1.5 to 3.5 volts reading to COM; at least 0.25 volts lower than +) FC bus BACnet MSTP communication circuit
COM	Common for the FC (“Field Connected”) BUS BACnet MSTP communication circuit	Negative of the VDC FC bus BACnet MSTP communication circuit
SHLD	Shield for the FC (“Field Connected”) BUS BACnet MSTP communication circuit	Earth ground reference of the cable to prevent interference on the FC bus BACnet MSTP communication circuit
Item Selector in red housing at left on top edge of the communication board		
EOL switch	End Of Line selector switch for the FC BUS BACnet MSTP communication circuit	ON selected only for the UCB that is the terminus of the FC bus BACnet MSTP communication cable to prevent signal “bounce-back”
LEDs on the communication board		
EOL	Green End Of Line indicator	Lit indicates the EOL switch is selected ON
FC BUS	Green FC bus communication transmission indicator	Lit/flickering indicates outgoing UCB FC bus communication is currently active, off indicates the UCB is awaiting incoming FC bus communication
ISO PWR	Green communication board Isolated Power indicator	Lit indicates the UCB is supplying power to the communication sub-board

1. When wiring unit and other devices using the SA Bus and FC Bus, see Table 31.

Table 31: Cable for FC buses and SA buses in order of preference

Bus and Cable Type	Non-Plenum Applications		Plenum Applications	
	Part Number	O.D.	Part Number	O.D.
FC Bus: 22 AWG Stranded, 3-Wire Twisted Shielded Cable[1]	Anixter: CBL-22/3-FC-PVC Belden®: B5501FE	0.138 in.	Anixter: CBL-22/3-FC-PLN Belden: B6501FE	0.140 in.
SA Bus (Terminal Block): 22 AWG Stranded, 4-Wire, 2 Twisted-Pair Shielded Cable	Anixter: CBL-22/2P-SA-PVC Belden: B5541FE	0.209 in.	Anixter: CBL-22/2P-SA-PLN Belden: B6541FE	0.206 in.
SA Bus (Modular Jack): 26 AWG Solid 6-Wire, 3 Twisted-Pair Cable[2]	—	—	Anixter preassembled: CBL-NETWORK25 CBL-NETWORK50 CBL-NETWORK75 CBL-NETWORK100	0.15 in.
FC Bus: 22 AWG Stranded, 3-Wire Twisted Non-Shielded Cable	Belden: B5501UE	0.135 in.	Belden: B6501UE	0.131 in.
SA Bus (Terminal Block): 22 AWG Stranded, 4-Wire, 2 Twisted-Pair Non-Shielded Cable	Belden: B5541UE	0.206 in.	Belden: B6541UE	0.199 in.

1. We strongly recommend 3-wire (for FC bus) and 4-wire, 2 twisted-pair (for SA bus), 22 AWG stranded, shielded cable. A 22 gauge cable offers the best performance for various baud rates, cable distances, and number of trunk devices primarily due to lower conductor-to-conductor capacitance. Shielded cable offers better overall electrical noise immunity than non-shielded cable. Observe the shield grounding requirements.
2. We recommend 26 AWG solid, 6-wire (3 twisted pairs) cable as the best fit for fabricating modular cables with the modular jack housing assembly. Be sure the cable you use fits the modular jack housing. The preassembled cables that are available from Anixter (Part No. CBL-NETWORKxxx) use 24 gauge wire.

Start-Up Sheet

Start-up & Service Data Instruction

Commercial Package Units

3.0 To 50.0 tons

Start-up Checklist

Date: _____

Job Name: _____

Customer Name: _____

Address: _____

City: _____ State: _____ Zip: _____

Model Number: _____ Serial Number: _____

Qualified Start-up Technician: _____ Signature: _____

HVAC Contractor: _____ Phone: _____

Address: _____

Contractor's E-mail Address: _____

Electrical Contractor: _____ Phone: _____

Distributor Name: _____ Phone: _____

Warranty Statement

BHC Residential & Light Commercial LLC is confident that this equipment will operate to the owner's satisfaction if the proper procedures are followed and checks are made at initial start-up. This confidence is supported by the 30 day dealer protection coverage portion of our standard warranty policy which states that BHC Residential & Light Commercial LLC will cover parts and labor on new equipment start-up failures that are caused by a defect in factory workmanship or material, for a period of 30 days from installation. Refer to the current standard warranty policy and warranty manual for details.

In the event that communication with BHC Residential & Light Commercial LLC is required regarding technical and/or warranty concerns, all parties to the discussion should have a copy of the equipment start-up sheet for reference. A copy of the original start-up sheet should be filed with the Technical Services Department.

The packaged unit is available in constant or variable air volume versions with a large variety of custom options and accessories available. Therefore, some variation in the startup procedure will exist depending upon the products capacity, control system, options and accessories installed.

This start-up sheet covers all startup check points common to all package equipment. In addition it covers essential startup check points for a number of common installation options. Depending upon the particular unit being started not all sections of this startup sheet will apply. Complete those sections applicable and use the notes section to record any additional information pertinent to your particular installation.

Warranty claims are to be made through the distributor from whom the equipment was purchased.

Equipment Startup

Use the local LCD or GoTemp Pro mobile application to complete the start-up.

A copy of the completed start-up sheet should be kept on file by the distributor providing the equipment and a copy sent to:

BHC Residential & Light Commercial LLC
Technical Services Department
5005 York Drive
Norman, OK 73069

1034349-UCL-L-0426

Safety Warnings

The inspections and recording of data outlined in this procedure are required for start-up of BHC Residential & Light Commercial LLC' packaged products. Industry recognized safety standards and practices must be observed at all times. General industry knowledge and experience are required to assure technician safety. It is the responsibility of the technician to assess all potential dangers and take all steps warranted to perform the work in a safe manner. By addressing those potential dangers, prior to beginning any work, the technician can perform the work in a safe manner with minimal risk of injury.

⚠WARNING

Lethal voltages are present during some start-up checks. Extreme caution must be used at all times.

⚠WARNING

Moving parts may be exposed during some startup checks. Extreme caution must be used at all times.

NOTE: Read and review this entire document before beginning any of the startup procedures.

Design Application Information

This information will be available from the specifying engineer who selected the equipment. If the system is a VAV system the CFM will be the airflow when the remote VAV boxes are in the full open position and the frequency drive is operating at 60 HZ. **Do not proceed with the equipment start-up without the design CFM information.**

Design Supply Air CFM: _____ Design Return Air CFM:_____

Design Outdoor Air CFM At Minimum Position: _____

Total External Static Pressure: _____

Supply Static Pressure: _____

Return Static Pressure: _____

Design Building Static Pressure: _____

Outside Air Dilution: Economizer Position Percentage: _____ CFM: _____

Supply Gas Pressure After Regulator W/o Heat Active _____ Inches_____

ADDITIONAL APPLICATION NOTES FROM SPECIFYING ENGINEER:

Reference

General Inspection	Completed	See Notes
Unit inspected for shipping, storage, or rigging damage	☐	☐
Unit installed with proper clearances	☐	☐
Unit installed within slope limitations	☐	☐
Refrigeration system checked for gross leaks (presence of oil)	☐	☐
Terminal screws and wiring connections checked for tightness	☐	☐
Filters installed correctly and clean	☐	☐
Economizer hoods installed in operating position	☐	☐
Condensate drain trapped properly, refer to Installation Manual	☐	☐
Economizer damper linkage tight	☐	☐
Gas Heat vent hood installed	☐	☐
All field wiring (power and control) complete	☐	☐

Air Moving Inspection	Completed	See Notes
Alignment of drive components	☐	☐
Belt tension adjusted properly	☐	☐
Blower pulleys tight on shaft, bearing set screws tight, wheel tight to shaft	☐	☐
Pressure switch or transducer tubing installed properly	☐	☐

Exhaust Inspection Powered ☐ Barometric Relief ☐	Completed	See Notes
Check hub for tightness	☐	☐
Check fan blade for clearance	☐	☐
Check for proper rotation	☐	☐
Check for proper mounting (screen faces towards unit)	☐	☐
Prove operation by increasing minimum setting on economizer	☐	☐

Economizer Inspection Standard ☐ BAS ☐	Completed	See Notes
CO_2 sensor installed Yes ☐ No ☐	☐	☐
Check economizer setting (Reference Smart Equipment Control Board LCD menu location)	☐	☐
Prove economizer open/close through Smart Equipment Board Setting	☐	☐

Reheat Mode Normal ☐ or Alternate ☐ Not Applicable ☐
Humidity Sensor (2SH0401) _____

Operating Measurements - Air Flow

Fan operates with proper rotation (All VFD equipped units with the optional Manual Bypass must be phased for correct blower rotation with the Bypass switch set in the LINE position) ID Fans ☐ Exh. Fans ☐ Cond. Fans ☐	
Pressure drop across dry evaporator coil (At maximum design CFM) [1]	IWC
External Static Pressure	IWC
Return Static Pressure	IWC
Supply Static Pressure	IWC
Supply Air CFM Using Dry Coil Chart	CFM
Final Adjusted Supply Air CFM[2]	CFM

1. Consult the proper airflow to pressure drop table to obtain the actual airflow at the measured pressure differential.
2. Was a motor pulley adjustment or change required to obtain the correct airflow?
   Was it necessary to increase of decrease the airflow to meet the design conditions?
   If the motor pulley size was changed, measure the outside diameters of the motor and blower pulleys and record those diameters here;

Blower Motor HP _____ FLA_____ RPM_____

Pulley Pitch Diameter _____ Turns Out_____ Final Turns Out_____

Blower Pulley Pitch Diameter _____ Fixed Sheave_____

Electrical Data

T1 - T2 _____ Volts T2 - T3 _____ Volts

Control Voltage _____ Volts T1 - T3 _____ Volts

Device	Nameplate	Measured List All Three Amperages
Supply Fan Motor[1, 2]	AMPS	AMPS
Exhaust Motor (Dampers 100%)	AMPS	AMPS
Condenser Fan #1	AMPS	AMPS
Condenser Fan #2 (if equipped)	AMPS	AMPS
Condenser Fan #3 (if equipped)	AMPS	AMPS
Condenser Fan #4 (if equipped)	AMPS	AMPS
Compressor #1	AMPS	AMPS
Compressor #2 (if equipped)	AMPS	AMPS
Compressor #3 (if equipped)	AMPS	AMPS
Compressor #4 (if equipped)	AMPS	AMPS

1. VAV units with heat section - simulate heat call to drive VAV boxes and VFD/IGV to maximum design airflow position.
2. VAV units without heat section - VAV boxes must be set to maximum design airflow position.

Refrigerant Safeties

Action	Completed	See Notes
Prove Compressor Rotation (3 phase only) by gauge pressure	☐	☐
Prove High Pressure Safety, All Systems	☐	☐
Prove Low Pressure Safety, All Systems	☐	☐

Refrigerant Detection System (RDS) Safety Test

Action	Completed	See Notes
Does the System have a Refrigerant Detection System (RDS) installed for R-454B?	☐	☐
Does Control Board Show any RDS alarms?	☐	☐
Are all available RDS Sensors pulsing with a green light?	☐	☐
Caution do not continue until any RDS alarms are resolved		
Prove Refrigerant Detection System Alarm Mitigation (Heating Units) – Shuts Down Active Heat Call[1]	☐	☐
Prove Refrigerant Detection System Alarm Mitigation (Cooling Mode) – Shuts Down Active Cooling Call[1]	☐	☐

1. Complete the above steps by pulling the J1 harness off the UCB during an active call for heat/cooling

Operating Measurements - Cooling

Stage	Discharge Pressure	Discharge Temp.	Liquid Line Temp.[1]	Subcooling[2]	Suction Pressure	Suction Temp.	Superheat
First	#	°	°	°	#	°	°
Second (if equipped)	#	°	°	°	#	°	°
Third (if equipped)	#	°	°	°	#	°	°
Fourth (if equipped)	#	°	°	°	#	°	°
Reheat 1st Stage	#	°	°	°	#	°	°

1. Liquid temperature should be taken before filter/drier.
2. Subtract 10 psi from discharge pressure for estimated liquid line pressure

Outside air temperature	_____	°F db	_____	°F wb	_____	%RH
Return Air Temperature	_____	°F db	_____	°F wb	_____	%RH
Mixed Air Temperature	_____	°F db	_____	°F wb	_____	%RH
Supply Air Temperature	_____	°F db	_____	°F wb	_____	%RH

Operating Measurements - Gas Heating

Fuel Type: ☐ Natural Gas ☐ LP Gas

Action		Completed	See Notes
Check for gas leaks		☐	☐
Prove Ventor Motor Operation		☐	☐
Prove Primary Safety Operation		☐	☐
Prove Auxiliary Safety Operation		☐	☐
Prove Rollout Switch Operation		☐	☐
Prove Smoke Detector Operation		☐	☐
Manifold Pressure	Stage 1	IWC	☐
	Stage 2 (If Equipped)	IWC	☐
	Stage 3 (If Equipped)	IWC	☐
Supply gas pressure at full fire		IWC	☐
Check temperature rise[1]	☐ measured at full fire	°F	☐

1. Input X Eff. (BTU output)
   1.08 X Temp. Rise

Operating Measurements Electric Heating

Heater kW _____kW Heater Voltage, Nameplate _____ Volts

Heater Model Number: _____

Serial Number: _____

Heater	Nameplate	Measured List All Three Amperages		
Stage 1	_____AMPS	_____AMPS	_____AMPS	_____AMPS
Stage 2	_____AMPS	_____AMPS	_____AMPS	_____AMPS
Stage 3	_____AMPS	_____AMPS	_____AMPS	_____AMPS
Stage 4	_____AMPS	_____AMPS	_____AMPS	_____AMPS
Checked Heater Limit		Yes ☐	No ☐	
Air Moving Switch Installed?		Yes ☐	No ☐	

Operating Measurements - Staging Controls

Verify Proper Operation of Heating/Cooling Staging Controls	
Create a cooling demand at the Thermostat, BAS System or Smart Equipment Verify that cooling/economizer stages are energized.	☐
Create a heating demand at the Thermostat, BAS System or Smart Equipment Verify that heating stages are energized.	☐
Verify Proper Operation of the Variable Frequency Drive (If Required)	
Verify that motor speed modulates with duct pressure change.	☐

Final - Inspection

Verify that all operational control set points have been set to desired value Scroll through all setpoints and change as may be necessary to suit the occupant requirements.	☐
Verify that all option parameters are correct Scroll through all option parameters and ensure that all installed options are enabled in the software and all others are disabled in the software. (Factory software settings should match the installed options)	☐
Verify that all access panels have been closed and secured	☐
Save a backup file from the unit control board onto a USB flash drive.	☐

Observed Product Deficiencies & Concerns:

_____

_____

_____

_____

_____

_____

_____

_____

_____

_____

_____

_____

_____

_____

_____

Subject to change without notice. Printed in U.S.A.
Copyright © 2026 by BHC Residential & Light Commercial LLC. All rights reserved.

1034349-UCL-L-0426
Supersedes: 1034349-UCL-K-0126

BHC Residential & Light Commercial LLC
5005 York Drive
Norman, OK 73069

NOTES:

Subject to change without notice. Printed in U.S.A.
Copyright © 2026 by BHC Residential & Light Commercial LLC. All rights reserved.

6528554-UIM-E-0826
Supersedes: 6528554-UIM-D-0526

BHC Residential & Light Commercial LLC
5005 York Drive
Norman, OK 73069