SERVICE MANUAL

INVERTER-DRIVEN MULTI-SPLIT SYSTEM
HEAT PUMP AIR CONDITIONERS

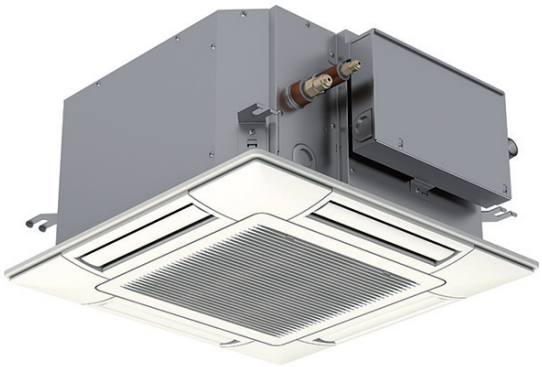

Service Manual

< Indoor Units >

- Mini Cassette
  - (H,Y,C)ICM008B21S
  - (H,Y,C)ICM012B21S
  - (H,Y,C)ICM015B21S
  - (H,Y,C)ICM018B21S

SM-18003

Important Notice

- Johnson Controls Inc. pursues a policy of continuing improvement in design and performance in its products. As such, Johnson Controls Inc. reserves the right to make changes at any time without prior notice.
- Johnson Controls Inc. cannot anticipate every possible circumstance that might involve a potential hazard.
- This heat pump air conditioning unit is designed for standard air conditioning applications only. Do not use this unit for anything other than the purposes for which it was intended for.
- The installer and system specialist shall safeguard against leakage in accordance with local pipefitter and electrical codes. The following standards may be applicable, if local regulations are not available. International Organization for Standardization: (ISO 5149 or European Standard, EN 378). No part of this manual may be reproduced in any way without the expressed written consent of Johnson Controls Inc.
- This heat pump air conditioning unit will be operated and serviced in the United States of America and comes with a full complement of the appropriate Safety, Danger, and Caution, warnings.
- If you have questions, please contact your distributor or dealer.
- This manual provides common descriptions, basic and advanced information to maintain and service this heat pump air conditioning unit which you operate as well for other models.
- This heat pump air conditioning unit has been designed for a specific temperature range. For optimum performance and long life, operate this unit within the range limits.
- This manual should be considered as a permanent part of the air conditioning equipment and should remain with the air conditioning equipment.

Product Inspection upon Arrival

1. Upon receiving this product, inspect it for any damages incurred in transit. Claims for damage, either apparent or concealed, should be filed immediately with the shipping company.
2. Check the model number, electrical characteristics (power supply, voltage, and frequency rating), and any accessories to determine if they agree with the purchase order.
3. The standard utilization for this unit is explained in these instructions. Use of this equipment for purposes other than what it designed for is not recommended.
4. Please contact your local agent or contractor as any issues involving installation, performance, or maintenance arise. Liability does not cover defects originating from unauthorized modifications performed by a customer without the written consent of Johnson Controls, Inc. Performing any mechanical alterations on this product without the consent of the manufacturer will render your warranty null and void.

1. Introduction

This Service Manual concentrates on the heat pump air conditioning units. Read this manual carefully before performing service.

This manual should be considered as a permanent part of the air conditioning equipment and should remain with the air conditioning equipment.

(Transportation/Installation Work) > (Refrigerant Piping Work) > (Electrical Wiring Work) > (Ref. Charge Work) > (Test Run) > (User)

2. Important Safety Instructions

Signal Words	
⚠ WARNING	Indicates a hazardous situation that, if not avoided, could result in death or serious injury.
⚠ CAUTION	Indicates a hazardous situation that, if not avoided, could result in minor or moderate injury.
NOTICE	Indicates information considered important, but not hazard-related (for example, messages relating to property damage).

General Precautions

⚠ WARNING	To reduce the risk of serious injury or death, read these instructions thoroughly and follow all warnings or cautions included in all manuals that accompanied the product and are attached to the unit. Refer back to these instructions as needed.

- This system should be installed by personnel certified by Johnson Controls, Inc. Personnel must be qualified according to local, state and national building and safety codes and regulations. Incorrect installation could cause leaks, electric shock, fire or explosion. In areas where Seismic ‘’Performance requirements are specified, the appropriate measures should be taken during installation to guard against possible damage or injury that might occur in an earthquake if the unit is not installed correctly, injuries may occur due to a falling unit.
- Use appropriate Personal Protective Equipment (PPE), such as gloves and protective goggles and, where appropriate, have a gas mask nearby. Also use electrical protection equipment and tools suited for electrical operation purposes. Keep a wet cloth and a fire extinguisher nearby during brazing. Use care in handling, rigging, and setting of bulky equipment.
- When transporting, be careful when picking up, moving and mounting these units. Although the unit may be packed using plastic straps, do not use them for transporting the unit from one location to another. Do not stand on or put any material on the unit. Get a partner to help, and bend with your knees when lifting to reduce strain on your back. Sharp edges or thin aluminum fins on the air conditioner can cut fingers, so wear protective gloves.
- Do not touch or adjust any safety devices inside the indoor or outdoor units. All safety features, disengagement, and interlocks must be in place and functioning correctly before the equipment is put into operation. If these devices are improperly adjusted or tampered with in any way, a serious accident can occur. Never bypass or jump-out any safety device or switch.
- Johnson Controls will not assume any liability for injuries or damage caused by not following steps outlined or described in this manual. Unauthorized modifications to Johnson Controls products are prohibited as they…
  - May create hazards which could result in death, serious injury or equipment damage.
  - Will void product warranties.
  - May invalidate product regulatory certifications.
  - May violate OSHA standards.

NOTICE	Take the following precautions to reduce the risk of property damage.

- Be careful that moisture, dust, or variant refrigerant compounds not enter the refrigerant cycle during installation work. Foreign matter could damage internal components or cause blockages.
- If air filters are required on this unit, do not operate the unit without the air filter set in place. If the air filter is not installed, dust may accumulate and breakdown may result.
- Do not install this unit in any place where silicon gases can coalesce. If the silicon gas molecules attach themselves to the surface of the heat exchanger, the finned surfaces will repel water. As a result, any amount of drainage moisture condensate can overflow from the condensate pan and could run inside of the electrical box, possibly causing electrical failures.
- When installing the unit in a hospital or other facility where electromagnetic waves are generated from nearby medical and/or electronic devices, be prepared for noise and electronic interference Electromagnetic Interference (EMI). Do not install where the waves can directly radiate into the electrical box, controller cable, or controller. Inverters, appliances, high-frequency medical equipment, and radio communications equipment may cause the unit to malfunction. The operation of the unit may also adversely affect these same devices. Install the unit at least 10 ft. (approximately 3m) away from such devices.
- When a wireless controller is used, locate at a distance of at least 3.3 ft. (approximately 1m) between the indoor unit and electric lighting. If not, the receiver part of the unit may have difficulty receiving operation commands.
- Do not install the unit in any location where animals and plants can come into direct contact with the outlet air stream. Exposure could adversely affect the animals and plants.
- Do not install the unit with any downward slope to the side of the condensate pipe. If you do, you may have drain water flowing back which may cause leaks.
- Be sure the condensate hose discharges water properly. If connected incorrectly, it may cause leaks.
- Do not install the unit in any place where oil can seep onto the units, such as table or seating areas in restaurants, and so forth. For these locations or social venues, use specialized units with oil-resistant features built into them. In addition, use a specialized ceiling fan designed for restaurant use. These specialized oil-resistant units can be ordered for such applications. However, in places where large quantities of oil can splash onto the unit, such as a factory, even the specialized units cannot be used. These products should not be installed in such locations.
- If the wired controller is installed in a location where electromagnetic radiation is generated, make sure that the wired controller is shielded and cables are sleeved inside conduit tubing.
- If there is a source of electrical interference near the power supply, install noise suppression equipment (filter).
- During the test run, check the unit's operation temperature. If the unit is used in an environment where the temperature exceeds the operation boundary, it may cause severe damage. Check the operational temperature boundary in the manual. If there is no specified temperature, use the unit within the operational temperature boundary of 32 to 104°F (0 to 40°C).
- Read installation and appropriate user manuals for connection with PC or peripheral devices. If a warning window appears on the PC, the product stops, does not work properly or works intermittently, immediately stop using the equipment.

Installation Precautions

⚠ WARNING	To reduce the risk of serious injury or death, the following installation precautions must be followed.

- When installing the unit into…
  - A wall: Make sure the wall is strong enough to hold the unit's weight. It may be necessary to construct a strong wood or metal frame to provide added support.
  - A room: Properly insulate any refrigerant tubing run inside a room to prevent "sweating" that can cause dripping and water damage to wall and floors.
  - Damp or uneven areas: Use a raised concrete pad or concrete blocks to provide a solid, level foundation for the unit to prevent water damage and abnormal vibration.
  - An area with high winds: Securely anchor the outdoor unit down with bolts and a metal frame. Provide a suitable wind baffle.
  - A snowy area: Install the outdoor unit on a raised platform that is higher than drifting snow. Provide snow protection hood.
- If the remote sensors are not used with this controller, then do not install this controller…
  - in a room where there is no thermostat.
  - where the unit is exposed to direct sunshine or direct light.
  - where the unit will be in close proximity to a heat source.
  - where hot/cold air from the outdoors, or a draft from elsewhere (such as air vents, diffusers or grilles) can affect air circulation.
  - in areas with poor air circulation and ventilation.
- Do not install the unit in the following places. Doing so can result in an explosion, fire, deformation, corrosion, or product failure.
  - Explosive or flammable atmosphere.
  - Where fire, oil, steam, or powder can directly enter the unit, such as in close proximity or directly above a kitchen stove.
  - Where oil (including machinery oil) may be present.
  - Where corrosive gases such as chlorine, bromine, or sulfide can accumulate, such as near a hot tub or hot spring.
  - Where dense, salt-laden airflow is heavy, such as in coastal regions.
  - Where the air quality is of high acidity.
  - Where harmful gases can be generated from decomposition.
- Do not position the condensate pipe for the indoor unit near any sanitary sewers where corrosive gases may be present. If you do, toxic gases can seep into breathable air spaces and can cause respiratory injuries. If the condensate pipe is installed incorrectly, water leakage and damage to the ceiling, floor, furniture, or other possessions may result. If condensate piping becomes clogged, moisture can back up and can drip from the indoor unit. Do not install the indoor unit where such dripping can cause moisture damage or uneven locations: Use a raised concrete pad or concrete blocks to provide a solid, level foundation for the unit to prevent water damage and abnormal vibration.
- Before performing any brazing work, be sure that there are no flammable materials or open flames nearby.
- Perform a test run to ensure normal operation. Safety guards, shields, barriers, covers, and protective devices must be in place while the compressor/unit is operating. During the test run, keep fingers and clothing away from any moving parts.
- Clean up the site when finished, remembering to check that no metal scraps or bits of wiring have been left inside the unit being installed.
- During transportation, do not allow the backrest of the forklift make contact with the unit, otherwise, it may cause damage to the heat exchanger and also may cause injury when stopped or started suddenly.
- Remove gas inside the closing pipe when the brazing work is performed. If the brazing filler metal is melted with remaining gas inside, the pipes will be blown off and it may cause injury.
- Be sure to use nitrogen gas for an airtight test. If other gases such as oxygen gas, acetylene gas or fluorocarbon gas are accidentally used, it may cause explosion or gas intoxication.

After installation work for the system has been completed, explain the "Safety Precautions," the proper use and maintenance of the unit to the customer according to the information in all manuals that came with the system. All manuals and warranty information must be given to the user or left near the Indoor Unit.

Refrigerant Precautions

⚠ WARNING	To reduce the risk of serious injury or death, the following refrigerant precautions must be followed.

- As originally manufactured, this unit contains refrigerant installed by Johnson Controls. Johnson Controls uses only refrigerants that have been approved for use in the unit's intended home country or market. Johnson Controls distributors similarly are only authorized to provide refrigerants that have been approved for use in the countries or markets they serve. The refrigerant used in this unit is identified on the unit's faceplate and/or in the associated manuals. Any additions of refrigerant into this unit must comply with the country's requirements with regard to refrigerant use and should be obtained from Johnson Controls distributors. Use of any non-approved refrigerant substitutes will void the warranty and will increase the potential risk of injury or death.
- If installed in a small room, take measures to prevent the refrigerant from exceeding the maximum allowable concentration in the event that refrigerant gases should escape. The installation should meet the requirements in ASHRAE Standards 15 and 34. If refrigerant gas has leaked during the installation work, ventilate the room immediately.
- Check the design pressure for this product is 601 psi (4.15MPa). The pressure of the refrigerant R410A is 1.4 times higher than that of the refrigerant R22. Therefore, the refrigerant piping for R410A shall be thicker than that for R22. Make sure to use the specified refrigerant piping. If not, the refrigerant piping may rapture due to an excessive refrigerant pressure. Besides, pay attention to the piping thickness when using copper refrigerant piping. The thickness of copper refrigerant piping differs depending on its material.
- The refrigerant R410A is adopted. The refrigerant oil tends to be affected by foreign matters such as moisture, oxide film, (or fat). Perform the installation work with care to prevent moisture, dust, or different refrigerant from entering the refrigerant cycle. Foreign matter can be introduced into the cycle from such parts as expansion valve and the operation may be unavailable.
- To avoid the possibility of different refrigerant or refrigerant oil being introduced into the cycle, the sizes of the charging connections have been changed from R407C type and R22 type. It is necessary to prepare the appropriate tools before performing installation work.
- Use refrigerant pipes and joints which are approved for use with R410A.
- A compressor/unit comprises a pressurized system. Never loosen threaded joints while the system is under pressure and never open pressurized system parts.
- Before installation is complete, make sure that the refrigerant leak test has been performed. If refrigerant gases escape into the air, turn OFF the main switch, extinguish any open flames and contact your service contractor. Refrigerant (Fluorocarbon) for this unit is odorless. If the refrigerant should leak and come into contact with open flames, toxic gas could be generated. Also, because the fluorocarbons are heavier than air, they settle to the floor, which could cause asphyxiation.
- When installing the unit, and connecting refrigerant piping, keep all piping runs as short as possible, and make sure to securely connect the refrigerant piping before the compressor starts operating. If the refrigerant piping is not connected and the compressor activates with the stop valve opened, the refrigerant cycle will become subjected to extremely high pressure, which can cause an explosion or fire.
- Tighten the flare nut with a torque wrench in the specified manner. Do not apply excessive force to the flare nut when tightening. If you do, the flare nut can crack and refrigerant leakage may occur.
- When maintaining, relocating, and disposing of the unit, dismantle the refrigerant piping after the compressor stops.
- When pipes are removed out from under the piping cover, after the insulation work is completed, cover the gap between the piping cover and pipes by a packing (field-supplied). If the gap is not covered, the unit may be damaged if snow, rain water or small animals enter the unit.
- Do not apply an excessive force to the spindle valve at the end of opening. Otherwise, the spindle valve flies out due to refrigerant pressure. At the test run, fully open the gas and liquid valves, otherwise, these devices will be damaged. (It is closed before shipment.)
- If the arrangement for outdoor units is incorrect, it may cause flowback of the refrigerant and result in failure of the outdoor unit.
- The refrigerant system may be damaged if the slope of the piping connection kit exceeds $\pm 15^{\circ}$.

Electrical Precautions

⚠ WARNING	Take the following precautions to reduce the risk of electric shock, fire or explosion resulting in serious injury or death.

- Highly dangerous electrical voltages are used in this system. Carefully refer to the wiring diagram and these instructions when wiring. Improper connections and inadequate grounding can cause serious injury or death.
- Perform all electrical work in strict accordance with this manual and all the relevant regulatory standards.
- Before servicing, open and tag all disconnect switches. Never assume electrical power is disconnected. Check with meter and equipment.
- Only use electrical protection equipment and tools suited for this installation.
- Insulate a wired controller against moisture and temperature extremes.
- Use specified cables between units.
- The new air conditioner may not function normally in the following instances:
  - If electrical power for the new air conditioner is supplied from the same transformer as the external equipment* referred to below.
  - If the power supply cables for this external equipment* and the new air conditioner unit are located in close proximity to each other.

    external equipment*: (Example): A lift, container crane, rectifier for electric railway, inverter power device, arc furnace, electric furnace, large-sized induction motor and large-sized switch.

  Regarding the cases mentioned above, surge voltage may be inducted into the power supply cables for the packaged air conditioner due to a rapid change in power consumption of the device and an activation of a switch.
  Check field regulations and standards before performing electrical work in order to protect the power supply for the new air conditioner unit.
- Communication cabling shall be a minimum of AWG18 (0.82mm^2), 2-Conductor, Stranded Copper. Shielded cable must be considered for applications and routing in areas of high EMI and other sources of potentially excessive electrical noise to reduce the potential for communication errors. When shielded cabling is applied, proper bonding and termination of the cable shield is required as per Johnson Controls guidelines. Plenum and riser ratings for communication cables must be considered per application and local code requirements.
- The polarity of the input terminals is important, so be sure to match the polarity when using contacts that have polarity.
- Use an exclusive power supply for the air conditioner at the unit's rated voltage.
- Highly dangerous electrical voltages may be used in this system. Carefully refer to the wiring diagram and these instructions when wiring. Improper connections and inadequate grounding can cause serious injury or death.
- Before installing the controller or remote devices, ensure that the indoor and outdoor unit operation has been stopped. Further, be sure to wait at least five minutes before turning off the main power switch to the indoor or outdoor units. Otherwise, water leakage or electrical breakdown may result.
- Do not open the service cover or access panel to the indoor or outdoor units without turning OFF the main power supply. Before connecting or servicing the controller or cables to indoor or outdoor units, open and tag all disconnect switches. Never assume electrical power is disconnected. Check with a meter and equipment.
- This equipment can be installed with a Ground Fault Circuit Breaker (GFCI), which is a recognized measure for added protection to a properly grounded unit. Install appropriate sized breakers / fuses / overcurrent protection switches, and wiring in accordance with local, state and NEC codes and requirements. The equipment installer is responsible for understanding and abiding by applicable codes and requirements.

- Table of Contents -

1. Installation 1-1
1.1 Outdoor Unit 1-2
1.2 Change-Over Box 1-2
1.3 Indoor Unit 1-2
1.4 Control Device 1-3
1.4.1 Wired Controller: CIW01 1-3
1.4.2 Simplified Wired Controller: CIS01 1-3
1.4.3 Wireless Controller: CIR01 1-3
1.4.4 Mini Central Controller: CCM01 1-3
1.4.5 Large Central Controller: CCL01 1-3
1.4.6 Computerized Central Controller Management Software: CCCS01 1-3
1.4.7 Computerized Central Controller Software / Operation Ratio for CCCS01 1-3
1.4.8 Computerized Central Controller Adapter: CCCA01 1-3
1.4.9 Infrared (IR) Receiver Kit: CMIRK01 1-3
1.4.10 Motion Sensor Kit: SOR-NEC 1-3
1.5 Optional Parts 1-4
1.5.1 Duct Adapter: PD-75C 1-4
1.5.2 Relay and 3 Pin Connector Kit: PSC-5RA 1-4
1.5.3 Remote Sensor: THM-R2A 1-4
1.5.4 3P Connector Cable: PCC-1A 1-4

2. Operation 2-1
2.1 Indoor Unit 2-2
2.2 Control Device 2-3
2.2.1 Wired Controller: CIW01 2-3
2.2.2 Simplified Wired Controller: CIS01 2-3
2.2.3 Mini Central Controller: CCM01 2-3
2.2.4 Large Central Controller: CCL01 2-3
2.2.5 Computerized Central Controller Management Software: CCCS01 2-3
2.2.6 Computerized Central Controller Software / Operation Ratio for CCCS01 2-3
2.2.7 Infrared (IR) Receiver Kit: CMIRK01 2-3

- Table of Contents -

3. Troubleshooting 3-1
3.1 Initial Troubleshooting 3-2
3.1.1 Checking Electrical Wiring and Power Supply 3-2
3.1.2 Location of Printed Circuit Boards (PCBs) 3-6
3.1.3 Checking Rotary Switch and DIP Switch Settings 3-7
3.1.4 Checking Wired Controller 3-9
3.1.5 Checking Using 7-Segment Display 3-15
3.1.6 Checking Alarm Code History 3-15
3.1.7 Emergency Operation 3-15
3.2 Troubleshooting Procedures 3-16
3.2.1 Alarm Code Table 3-17
3.2.2 Troubleshooting Using Alarm Codes 3-18
3.2.3 Abnormalities of Devices 3-33
3.3 Procedures for Checking 3-45
3.3.1 Self-Checking of PCBs using Wired Controller 3-45
3.3.2 Self-Checking of Wired Controller 3-45
3.4 Test Run 3-46
3.4.1 Test Run Using Wired Controller 3-47
3.4.2 Test Run from Outdoor Unit Side 3-49
3.4.3 Checking the Test Run 3-49
3.4.4 Check List for Refrigerant System 3-50
3.4.5 Reset for Accumulated Operation Time of Compressor 1-2 (cUJ1- cUJ2) 3-50

- Table of Contents -

4. Maintenance 4-1
4.1 Maintenance of Outdoor Unit 4-2
4.2 Maintenance of Indoor Unit 4-3
4.2.1 Removing Air Filter and Air Inlet Grille 4-3
4.2.2 Removing Electrical Box Cover 4-4
4.2.3 Removing Optional Decorative Panel 4-5
4.2.4 Removing Turbo Fan and Fan Motor 4-7
4.2.5 Removing Printed Circuit Board 4-8
4.2.6 Removing Condensate Pan 4-9
4.2.7 Removing Drain-up Mechanism 4-10
4.2.8 Removing Float Switch 4-11
4.2.9 Removing Outlet Air Thermistor 4-12
4.2.10 Removing Liquid Pipe Thermistor, Gas Pipe Thermistor and Expansion Valve Coil 4-13
4.2.11 Removing Inlet Air Thermistor 4-15
4.2.12 Removing Auto Louver Motors and Louver 4-16
4.3 Cleaning Indoor Unit Heat Exchanger 4-17
4.3.1 Required Tools for Cleaning (Field Supplied) 4-17
4.3.2 Cleaning Procedure 4-18
4.4 Main Parts 4-22
4.4.1 for Outdoor Unit 4-22
4.4.2 for Change-Over Box 4-22
4.4.3 for Indoor Units 4-23
4.4.3.1 Printed Circuit Board 4-23
4.4.3.2 Fan Motor 4-23
4.4.3.3 Thermistor 4-24
4.4.3.4 Electronic Expansion Valve 4-25

- Table of Contents -

5. External Input/Output and Function Setting 5-1

5.1 DIP Switch Settings of Outdoor Unit 5-2

5.2 High Static Pressure Setting (DSW5-No.5: ON) 5-2

5.3 External Input/Output and Function Setting Mode for Outdoor Unit 5-2

5.4 External Input/Output and Function Setting Mode for Indoor Unit 5-3

5.4.1 External Input and Output Settings 5-5

5.4.1.1 Remote Control ON/OFF Function 5-6

5.4.1.2 Power Supply ON/OFF 1 (Automatic Operation When Power Supply Is ON) 5-11

5.4.1.3 Power Supply ON/OFF 2 (Restarting Function After Power Failure) 5-11

5.4.1.4 Control by Field-Supplied Room Thermostat [Input Setting: Code (01) (for Cooling), Code (02) (for Heating)] 5-12

5.4.1.5 Remote Cooling/Heating Change [Input Setting: Code (07)] 5-13

5.4.1.6 Picking Up Operation Signal 5-14

5.4.2 Function Setting 5-17

5.4.2.1 Function Selection Item 5-17

5.4.2.2 Description of Function Selection Item 5-23

5.5 Functions from Wired Controller 5-36

5.5.1 Power Saving Function 5-36

5.5.2 Schedule Function 5-38

5.5.3 Indication Function 5-38

5.5.4 Comfort Function 5-39

6. Field Work Instructions 6-1

6.1 Caution for Refrigerant Leakage 6-2

6.2 Modifications of Charging Refrigerants Other than Those Specified by Johnson Controls 6-3

6.3 Maintenance Work 6-4

6.4 Service and Maintenance Record by 7-Segment Display 6-5

6.5 Service and Maintenance Record by Wired Controller 6-6

6.6 Service and Maintenance Record 6-8

6.7 Saturation Curve for Refrigerant 6-9

6.8 Mollier Chart for R410A 6-10

7. Service Parts List 7-1

● Annex Annex-1

1. Installation

1.1 Outdoor Unit

Refer to the Installation Manual for Outdoor Unit.

1.2 Change-Over Box

Refer to the Installation Manual for Change-Over Box.

1.3 Indoor Unit

Refer to the Installation Manual for Mini Cassette and Decorative Panel.

1.4 Control Device

1.4.1 Wired Controller: CIW01
1.4.2 Simplified Wired Controller: CIS01
1.4.3 Wireless Controller: CIR01
1.4.4 Mini Central Controller: CCM01
1.4.5 Large Central Controller: CCL01
1.4.6 Computerized Central Controller Management Software: CCCS01
1.4.7 Computerized Central Controller Software / Operation Ratio for CCCS01
1.4.8 Computerized Central Controller Adapter: CCCA01
1.4.9 Infrared (IR) Receiver Kit: CMIRK01
1.4.10 Motion Sensor Kit: SOR-NEC

For more information of the above Control Devices, please refer to the Installation Manuals for each product.

1.5 Optional Parts

1.5.1 Duct Adapter: PD-75C
1.5.2 Relay and 3 Pin Connector Kit: PSC-5RA
1.5.3 Remote Sensor: THM-R2A
1.5.4 3P Connector Cable: PCC-1A

For more information of the above Optional Parts, please refer to the Installation Manuals for each product.

2. Operation

2.1 Indoor Unit

Refer to the Operation Manual for Mini Cassette.

2.2 Control Device

2.2.1 Wired Controller: CIW01
2.2.2 Simplified Wired Controller: CIS01
2.2.3 Mini Central Controller: CCM01
2.2.4 Large Central Controller: CCL01
2.2.5 Computerized Central Controller Management Software: CCCS01
2.2.6 Computerized Central Controller Software / Operation Ratio for CCCS01
2.2.7 Infrared (IR) Receiver Kit: CMIRK01

For more information of the above Control Devices, please refer to the Operation Manuals for each product.

3. Troubleshooting

3.1 Initial Troubleshooting

3.1.1 Checking Electrical Wiring and Power Supply

Check the following items if there is any abnormality in the activation of the system.

No.	Check Situation	Check Method
1	Is any power supply breaker or fuse open?	Check the voltage (secondary side) of the breaker and also check the continuity of the fuse with a tester.
2	Is voltage at the secondary side of the transformer correct?	Disconnect at the secondary side of the transformer and measure voltage with a tester.
3	Is wiring firmly secured and correctly connected?	Check that the following wiring connection on O.U./I.U. printed circuit boards (PCBs) is not loose. • The connection for thermistors • The connection for the wired controller cable • The connection for communication cabling • Each connection for power supply line Check that the wiring connection on O.U./I.U. PCBs is not loose or misconnected on the site according to the “Electrical Wiring Diagram” of the Engineering Manual.

NOTE:
If the fuse(s) on an I.U. PCB is blown, diagnose the cause of overcurrent and replace the fuse(s).
In addition, check the power supply of optional equipment because the fuse(s) may blow due to an external power supply failure. Turn off the power for safety.

● For Outdoor Unit

Refer to the Service Manual for Outdoor Unit.

● For Indoor Units

The electrical wiring capacity of the outdoor unit is according to the “Installation and Maintenance Manual” of the outdoor unit. Setting DIP switches may be required depending on the combinations with the outdoor unit.

Select wiring capacity according to Table 3.1 below. This equipment can be installed with a Ground Fault Circuit Interrupter (GFCI), which is a recognized measure for added protection to a properly grounded unit. Install appropriate sized breakers / fuses / overcurrent protection switches, and wiring in accordance with local, state and NEC codes and requirements. The equipment installer is responsible for understanding and abiding by applicable codes and requirements.

Heat Pump System

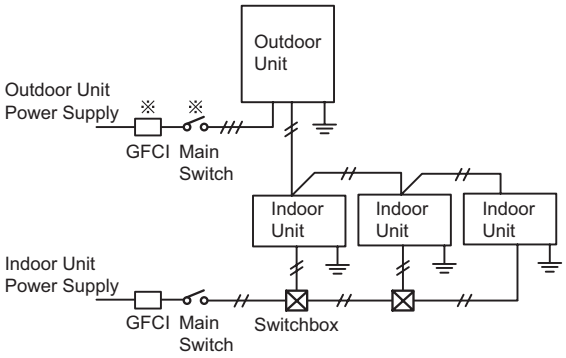

※ Refer to the “Installation and Maintenance Manual” for the connected outdoor unit for details of wire, GFCI and main switch for outdoor unit.

Heat Recovery System

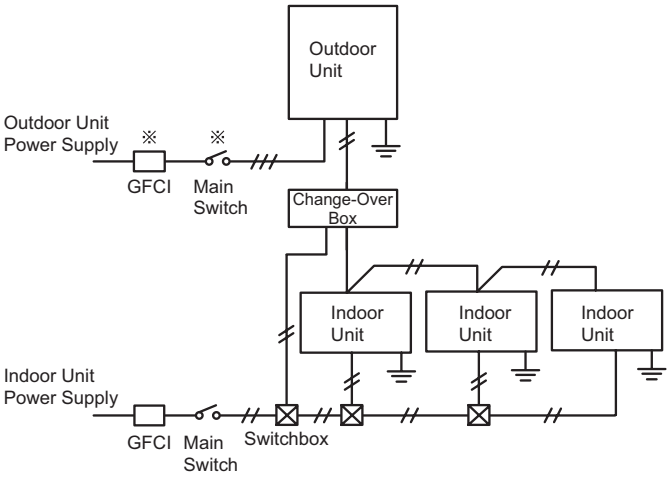

※ Refer to the “Installation and Maintenance Manual” for the connected outdoor unit for details of wire, GFCI and main switch for outdoor unit.

NOTICE

- This equipment can be installed with a Ground Fault Circuit Interrupter (GFCI), which is a recognized measure for added protection to a properly grounded unit. Install appropriate sized breakers/ fuses/ overcurrent protection switches, and wiring in accordance with local, state and NEC codes and requirements. The equipment installer is responsible for understanding and abiding by applicable codes and requirements. Check the recommended size of ELB shown in Table 3.1.
  Select high-sensitive high speed ELB or GFCI when the rated sensitive current is less than 30mA. (The motion time should be within 0.1 second.)
- Between indoor and outdoor units, use dual-conductor, AWG18 (0.82mm^2) stranded copper cable for communication cable. Do not use any cable with more than two conductors. Twisted pair or shielded cable can be used in environments with excessive electrical noise to reduce the possibility of communication errors between system components. Total cable length should not exceed 3281 ft (1000m).
- Select the wiring size, GFCI (Ground Fault Circuit Interrupter) in accordance with the regulations for each region, the “Installation and Maintenance Manual”, and the dedicated electrical circuit that must be used.
- Outside of the indoor unit, installation of the power supply wiring, communication cable, and wired controller cable should be spaced as far apart as possible.

- Mini Cassette

Table 3.1 Recommended Wiring Capacity and Sizes

Follow local electrical codes when selecting a GFCI device.

Model	Power Supply	Minimum Wire Thickness [AWG (mm^2)]			GFCI <Ground Fault Circuit Interrupter>		Main Switch		MCA <Minimum Circuit Ampacity>
		Power Supply Wiring Size < Main >	Ground Wiring Size	Comm. Cable Size	Nominal Current [A]	Nominal Sensitive Current [mA]	Nominal Current [A]	Fuse [A]	[A]
(H,Y,C)ICM008B21S	1~, 208/230V 60Hz	18 (0.82)	18 (0.82)	18 (0.82)	15	30	15	15	0.7
(H,Y,C)ICM012B21S									0.8
(H,Y,C)ICM015B21S									1.0
(H,Y,C)ICM018B21S									1.0

NOTES:
1) Follow local codes and regulations when selecting field wires.
2) This equipment can be installed with a Ground Fault Circuit Interrupter (GFCI), which is a recognized measure for added protection to a properly grounded unit. Install appropriate sized breakers / fuses / overcurrent protection switches, and wiring in accordance with local, state and NEC codes and requirements. The equipment installer is responsible for understanding and abiding by applicable codes and requirements.
3) Total operating current should be less than 12A.
4) Fuse should be slow blowing capability.

● Wired Controller Connecting Diagram

(a) Wired Controllers to each Unit for Individual Operation Setting

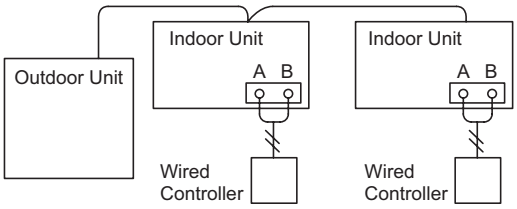

(b) One Wired Controller for Individual Operation Setting

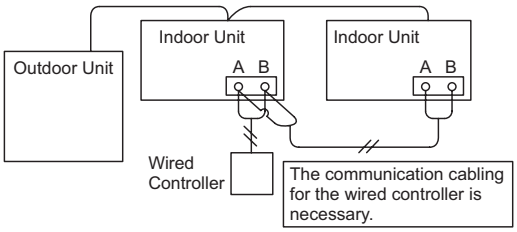

(c) Connecting Wired Controller if Connecting between Individual Systems

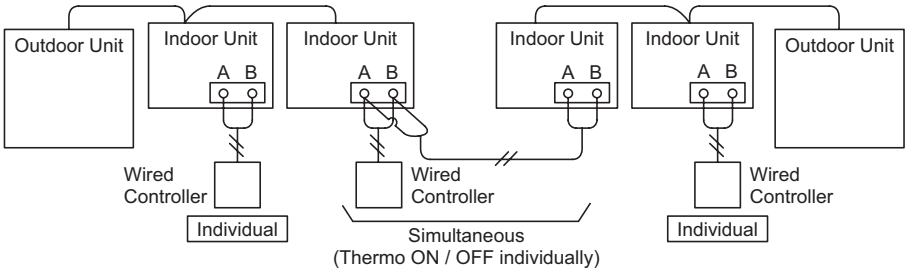

NOTE:
Thermo-ON: The outdoor unit and some indoor units are running.
Thermo-OFF: The outdoor unit and some indoor units stay on, but don't run.

3.1.2 Location of Printed Circuit Boards (PCBs)

(1) Outdoor Unit

Refer to the Service Manual for Outdoor Unit.

(2) Indoor Unit

● Mini Cassette

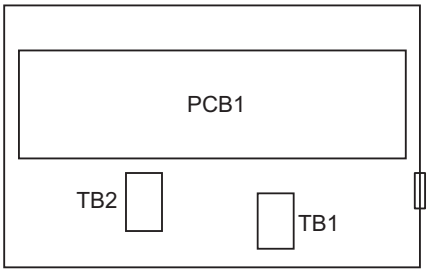

3.1.3 Checking Rotary Switch and DIP Switch Settings

The following diagram indicates the factory settings of DSWs on PCBs in the indoor and outdoor units. When simultaneous operation control of multiple units or room thermo control is operated, the DSW setting will be different as shown below.

(1) Outdoor Unit (Factory Setting)

Refer to the Service Manual for Outdoor Unit.

(2) Indoor Unit (Factory Setting)

The positions of the DIP switches on the PCB are shown in the figure below. Turn OFF all power supplies before setting.
Without turning OFF all power supplies, the switches do not work and the settings are invalid.
The "■" mark indicates the position of DIP switches.

● Mini Cassette

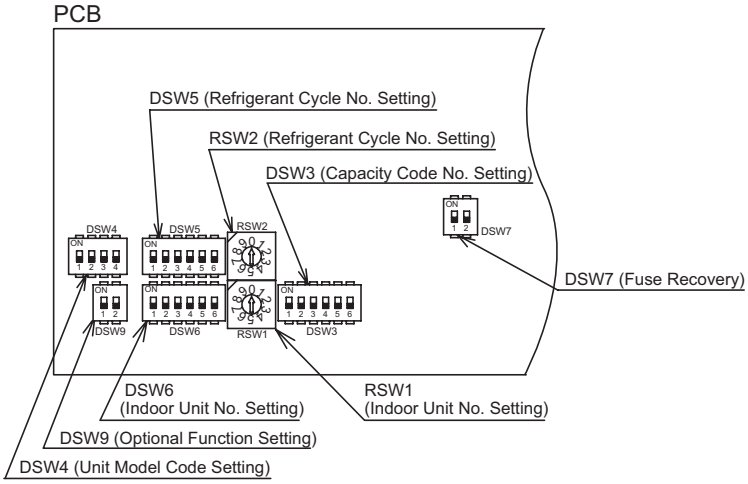

DIP Switch Settings

(1) Turn OFF the power supply of the indoor unit and the outdoor unit before DIP switch setting. Not doing so makes the setting invalid.

(2) Factory settings for DSW6 and RSW1 are set to "0". If connecting the indoor unit to H-LINK II supporting the outdoor unit without setting any DIP switches, auto-address setting will be performed by the wired controller.

(3) Auto-Address Setting by Wired Controller
The address numbering is started from "0" by the auto-address function when the wired controller is connected to H-LINK II.

(4) Unit No. Setting (RSW1 and DSW6)
The indoor unit numbers of all indoor units are not required. The indoor unit numbers are set by the auto-address function. If the indoor unit number setting is required, set the unit numbers of all indoor units respectively and serially by following setting positions. It is recommended to assign a number to each indoor unit beginning with "1." Though a maximum of 64 indoor units per refrigerant system can be connected to the H-LINK II System, available numbers range from 0 to 63. Therefore, the applicable number for the 64th indoor unit will be "0."
For centralized control, this setting is required.

Unit No. Setting

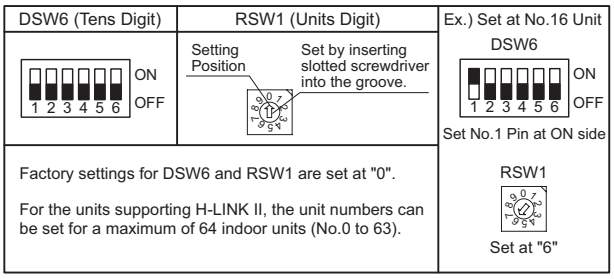

(5) Capacity Code Setting (DSW3)
No setting is required because of the factory setting. This switch is utilized for setting the capacity code which corresponds to the capacity of the indoor unit.

Indoor Unit Capacity (MBH)	8	12	15	18
Setting Position	ON 1 2 3 4 5 6 OFF	ON 1 2 3 4 5 6 OFF	ON 1 2 3 4 5 6 OFF	ON 1 2 3 4 5 6 OFF

(6) Refrigerant Cycle Number Settings (RSW2 and DSW5)
This setting is required. The unit arrives with all settings in the OFF position.

Refrigerant Cycle Number Setting

DSW5 (Tens Digit)	RSW2 (Units Digit)	Ex.) Set at No.5 Cycle
1 2 3 4 5 6 ON OFF	Setting Position Set by inserting slotted screwdriver into the groove.	DSW5 1 2 3 4 5 6 ON OFF Set All Pins OFF
Factory settings for DSW5 and RSW2 are set at "0". For the units supporting H-LINK II, the refrigerant cycle numbers can be set for a maximum of 64 cycles. (No. 0 to 63)		RSW2 Set at "5"

(7) Unit Model Code Setting (DSW4)
No setting is required.
This switch is utilized to set the model code of the indoor unit.

(8) Fuse Recover (DSW7)

* Factory Setting

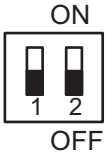

* When applying high voltage to terminals 1 and 2 of TB2, the fuse (0.5A) on the PCB is blown. If this happens, first connect the wiring to TB2, and then turn on the No.1 pin.

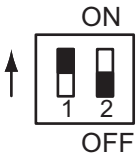

(9) Optional Function Setting (DSW9)
No setting is required. Factory settings are all OFF.

3.1.4 Checking Wired Controller

Wired Controller Model: CIW01

Each “Check Menu” item and its function are explained in the following table.

Check Menu Item	Function
Check 1	Sensor condition of air conditioner will be monitored and indicated.
Check 2	Sensor data of air conditioner prior to alarm occurrence will be indicated.
Alarm History Display	Previous alarm record (date, time, alarm code) will be indicated.
Model Display	Model name and manufacturing number will be indicated.
I.U./O.U. PCB Check	The result of PCB check will be indicated.
Self Checking	Checking of wired controller will be carried out.

● Setting Method

< Normal Mode Display >

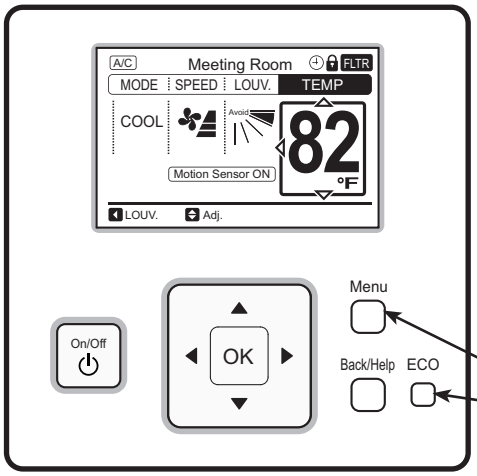

< Check Menu Display >

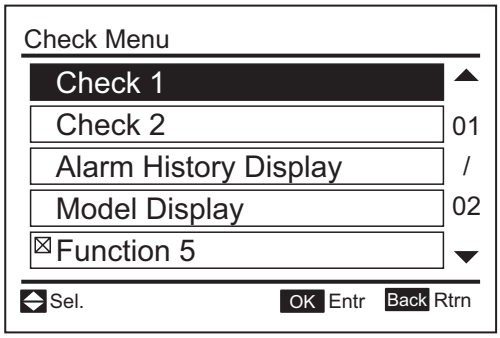

Press and hold “Menu” and “ECO” simultaneously for three seconds during the normal mode.

(1) Check 1 and Check 2

(1) Press and hold “Menu” and “ECO” simultaneously for three seconds during the normal mode. The Check Menu is displayed.	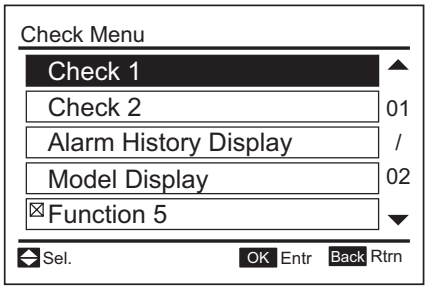
(2) Select “Check 1” (or “Check 2”) from the Check Menu and press “OK”.	
(3) Select the Set Indoor Unit by pressing “△ ▽ ◁ ▷” and press “OK”. This screen is NOT displayed when there is only one indoor unit connected with the wired controller. In this case, (4) below will be displayed.	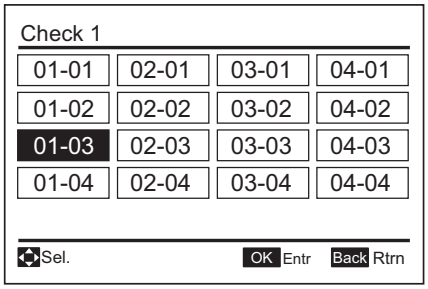
(4) Press “△“ or “▽“ to change the screen.	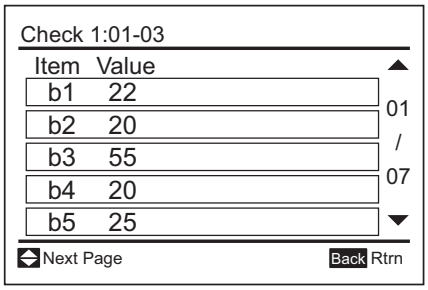

Features of Check Mode 1

No.	Item	Data Name
1	b1	Set Temp.
2	b2	Inlet Air Temp.
3	b3	Discharge Air Temp.
4	b4	Liquid Pipe Temp.
5	b5	Remote Thermistor Temp.
6	b6	Outdoor Air Temp.
7	b7	Gas Pipe Temp.
8	b8	Evaporating Temp. at Heating
9	b9	Condensing Temp. at Cooling
10	bA	Comp. Top Temp.
11	bb	Thermo Temp. of Wired Controller
12	bC	Not Prepared
13	C1	I.U. Micro-Computer *2
14	C2	O.U. Micro-Computer *2
15	d1	Stopping Cause State Indication
16	E1	Times of Abnormality
17	E2	Times of Power Failure
18	E3	Times of Abnormal Transmitting
19	E4	Times of Inverter Tripping
20	F1	Louver Sensor State
21	H1	Discharge Pressure

No.	Item	Data Name
22	H2	Suction Pressure
23	H3	Control Information
24	H4	Operating Frequency
25	J1	I.U. Capacity
26	J2	O.U. Code
27	J3	System Number (1)
28	J4	System Number (2)
29	L1	I.U. Electronic Expansion Valve
30	L2	O.U. Electronic Expansion Valve 1
31	L3	O.U. Electronic Expansion Valve 2
32	L4	O.U. Electronic Expansion Valve B
33	P1	Comp. Current
34	P2	Comp. Operating Accumulated Time
35	q1	Motion Sensor Reaction Rate *1
36	q2	Radiation Sensor Temp. *1
37	q3	Motion Sensor 1 Reaction Rate *1
38	q4	Motion Sensor 2 Reaction Rate *1
39	q5	Motion Sensor 3 Reaction Rate *1
40	q6	Motion Sensor 4 Reaction Rate *1
41	q7	Setting Temp. Collected Value

*1 The average value for 30 seconds (update cycle time of Check Mode) is displayed on the LCD.

*2 “C1” and “C2” are indicated by digital number like a 7-segment display.
Each signal means state of following item. (When ON, signal is displayed)

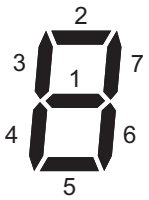

	"C1" I.U. Micro-Computer State	"C2" O.U. Micro-Computer State
1	Operation	CMC1
2	Alarm	RVR1
3	Heating Thermo ON	CMC2
4	Cooling Thermo ON	RVR2
5	-	Outdoor Fan
6	-	SVA
7	Drain-Up Mechanism	SVB

NOTE:
Items for O.U. are different by O.U. model.
For detail, refer to the Service Manual for Outdoor Unit.

Features of Check Mode 2

No.	Item	Data Name
1	q1	Inlet Air Temp.
2	q2	Discharge Air Temp.
3	q3	Liquid Pipe Temp.
4	q4	Outdoor Air Temp.
5	q5	Gas Pipe Temp.
6	q6	Evaporating Temp. at Heating
7	q7	Condensing Temp. at Cooling
8	q8	Comp. Top Temp.

No.	Item	Data Name
9	q9	Discharge Pressure
10	qA	Suction Pressure
11	qb	Control Information
12	qC	Operating Frequency
13	qd	I.U. Expansion Valve
14	qE	O.U. Expansion Valve 1
15	qF	Comp. Current

(2) Alarm History Display

The Alarm History Display is accessed from the Check Menu.

(1) Press and hold “Menu” and “ECO” simultaneously for 3 seconds during the normal mode. The Check Menu is displayed.	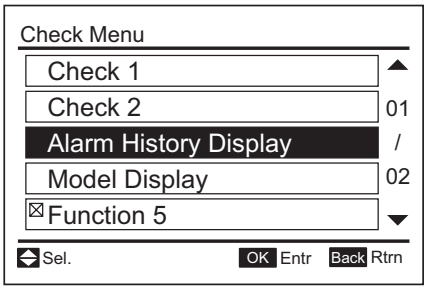
(2) Select “Alarm History Display” from Check Menu and press “OK”.	
(3) The Alarm History Display changes by pressing “△“ or “▽“.	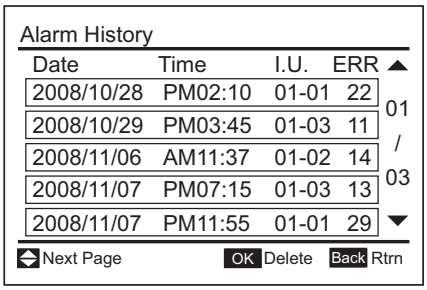
(4) To delete the alarm history, press “OK”. The confirmation screen will be displayed. Select “Yes” and press “OK”. The alarm history is deleted and the screen will return to (3) above. If “No” is pressed, the screen will return to (3) above.	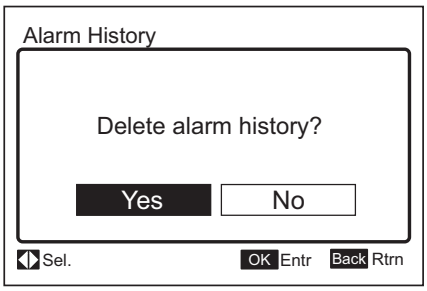

(3) I.U./O.U. PCB Check

(1) Press and hold “Menu” and “ECO” simultaneously for three seconds during the normal mode.
Check Menu is displayed.

(2) Select “I.U./O.U. PCB Check” from the Check Menu and press “OK”.

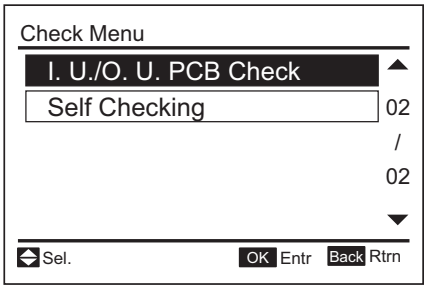

(3) Select the indoor unit to be set by pressing “△ ▽ ◁ ▷” and press “OK”. This screen is NOT displayed when there is only one indoor unit connected with the wired controller. In this case, (4) below will be displayed.

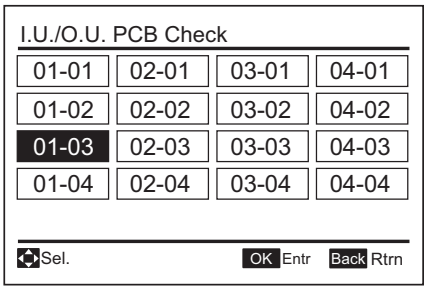

(4) The indoor unit PCB and the outdoor unit PCB checks are started.
* If “Menu“ is pressed during the check, the check is canceled and the screen will return to (2).
* If “Back/Help” is pressed during the check, the check is canceled and the screen will return to (3) above.

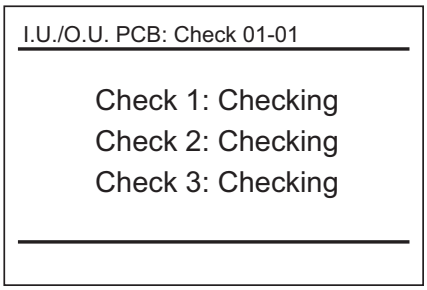

(5) After completing the check, the results of the PCB check will be indicated. Press “Back/Help” and return to (3) above.

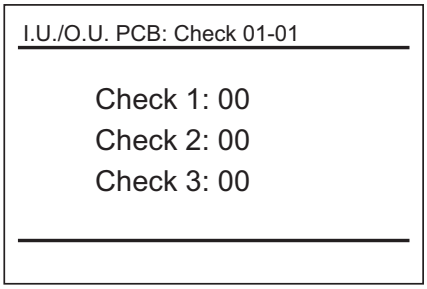

< Results of Check Table >

Indoor Unit PCB	
00	Normal
01	Abnormality of Inlet Air Temp. Thermistor
02	Abnormality of Outlet Air Temp. Thermistor
03	Abnormality of Liquid Pipe Temp. Thermistor
04	Abnormality of Remote Thermistor
05	Abnormality of Gas Pipe Temp. Thermistor
08	Abnormality of Transmission of Central Station
0A	Abnormality of EEPROM
0b	Zero Cross Input Failure
EE	Abnormality of Transmission of I.U. during Check

Outdoor Unit PCB	
00	Normal
07	Abnormality of Transmission of Outdoor Unit
F4	ITO Input Failure
F5	PSH Input Failure
F6	Abnormality of Protection Signal Detection Circuit
F7	Abnormality of Phase Detection
F8	Abnormality of Transmission of Inverter
FA	Abnormality of High Pressure Sensor
Fb	Abnormality of Comp. Discharge Gas Temp. Thermistor
FC	Abnormality of Low Pressure Sensor
Fd	Abnormality of Evaporating Temp. Thermistor at Heating
FF	Abnormality of Ambient Air Temp. Thermistor

(4) Self-Checking

Self-Checking checks the wired controller and clears EEPROM (storage cell inside of the wired controller).

(1) Press and hold “Menu” and “ECO” simultaneously for three seconds during the normal mode (when unit is not operating).
The Check Menu is displayed.

(2) Select “Self Checking” from the Check Menu and press “OK”.

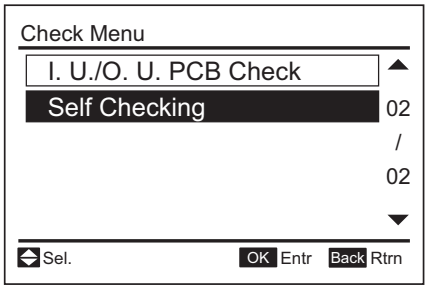

(3) Select the process for “Self Checking”.

* To start self check, press “ECO”.
* To clear EEPROM, press “▽” and “ECO” simultaneously.
  → See EEPROM clear process (15) below.

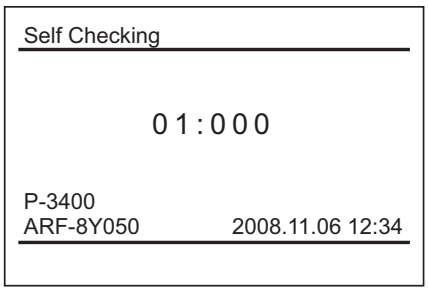

(4) LCD Test
Press “OK” and the screen will change as shown at the right.

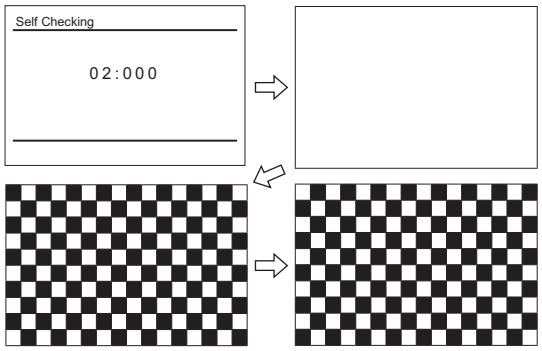

(5) Backlight Test
LCD brightness is changed gradually by pressing “OK”.

(6) Contrast Test
Contrast of the LCD gradually changes by pressing “OK”.

(7) Run Indicator Test
Press “OK” and the run indicator will flash in red and green twice for each.

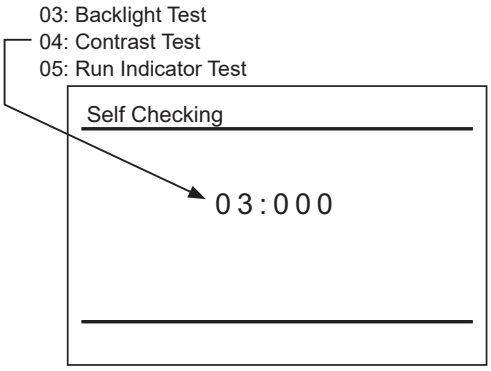

(8) Button Input Test
Press the nine buttons one-by-one. The number indicated with “Ⓐ” will count up as buttons are being pressed.

* The order of pressing buttons is random.
  Do not press more than one button at a time. It will not be counted.

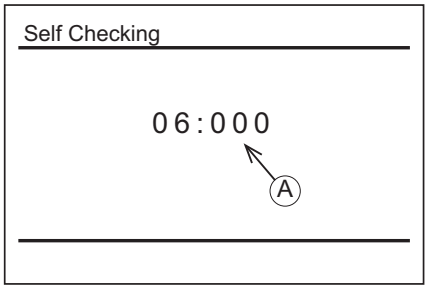

(9) No Function This function is not used. Press “OK” to proceed.	07: No Function 08: Transmission Test Self Checking 07:000
(10) Communication (Transmission) Circuit Test The wired controller automatically starts to check the communication circuit.	
(11) Wired Controller Thermistor Test The detected temperature by the wired controller thermistor is displayed at “Ⓐ” in the figure at the right.	Self Checking 09:025 Ⓐ
(12) Date/Time Test The date and time is changed from “2012.03.04 12:34” to “2008. 01. 01 00:00”.	Self Checking 10:000 2008.01.01 00:00
(13) EEPROM Test < EEPROM Clearing Cancel > Press “?“ (help). < EEPROM Clear > Press “OK” or wait 15 seconds. EEPROM data will be cleared. During the process, the numbers will indicate the location with “Ⓐ”. If Ⓐ has a value of “999”, EEPROM is in a faulty condition. *If “Ⓐ” has “999”, the process does not proceed to the next step.	Self Checking 11:000 Ⓐ

EEPROM Process

(14) Clear EEPROM The wired controller will automatically start the EEPROM clearing process.	Self Checking 13:000
(15) After several seconds pass, the self checking is completed and the wired controller is automatically restarted.	

(5) Contact Information Registration

Contact information can be registered from “Contact Information”.

(1) Press and hold “Menu” and “Back/Help” simultaneously for at least three seconds during the normal mode (when unit is not operating). The Test Run Menu will be displayed.

(2) Select “Contact Information” from the Test Run Menu and press “OK”.
Contact Information 1 will be displayed.

(3) Press “Back/Help” to change font types.

(4) Press “△ ▽ ◁ ▷” to select letters.

(5) Press “OK” to confirm the letters. (Max.: 28 letters)

(6) Select “Fin.” and press “OK” (or simply press “Menu”), (7) will be displayed.

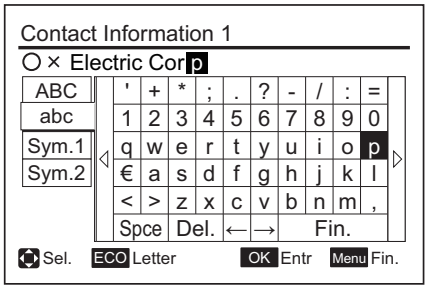

(7) Repeat (3) through (5) to register contact information and continue.
Select “Fin.” and press “OK”, the confirmation screen will be displayed.
(Also, press “Menu” and the confirmation screen will be displayed.)

(8) Select “Yes” and press “OK”. The Test Run Menu will be displayed after the setting is confirmed.
If “No” is pressed, the screen will return to (3) above.

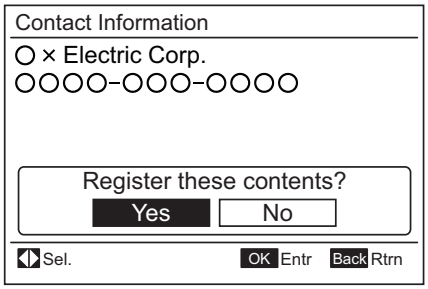

3.1.5 Checking Using 7-Segment Display

Refer to the Service Manual for Outdoor Unit.

3.1.6 Checking Alarm Code History

Refer to the Service Manual for Outdoor Unit.

3.1.7 Emergency Operation

Refer to the Service Manual for Outdoor Unit.

3.2 Troubleshooting Procedures

● Alarm Code Indication of Wired Controller

< CIW01 >

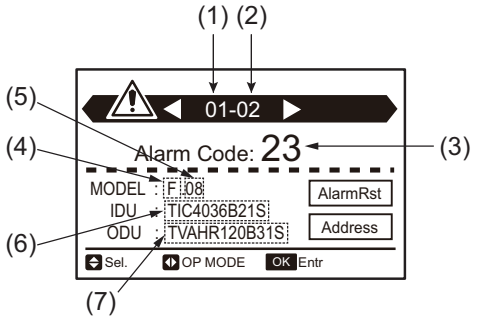

(1) Refrigerant Cycle No. (*1)
(2) Indoor Unit No. (*1)
(3) Alarm Code
(4) Unit Model Code
(5) Total Number of Indoor Units in the Same System as the Indoor Unit Having Trouble
(6) Indoor Unit Model (*2) (*3)
(7) Outdoor Unit Model (*2) (*3)

(*1): If two or more indoor units having trouble are connected to the wired controller, the indicated indoor unit is selectable.

(*2): The initial of model names are indicated as “T”. These “T” shall be replaced with “H” or “Y”. (Except for the wall mount model.)
When there is a combination of outdoor units, ODU indication is the model of the main outdoor unit (Unit A).

(*3): The model names are not indicated depending on the unit type.

● The alarm code is indicated by the LED on the change-over box PCB.

< PCB of Change-Over Box >

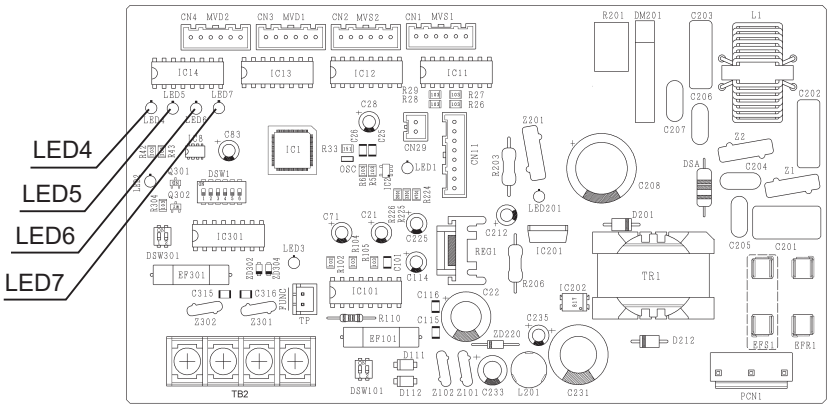

LED				Alarm Code	Contents
4	5	6	7		
○	○	X	X	03	Abnormal communication between change-over box and outdoor unit.
X	X	○	○	03	Abnormal communication between change-over box and indoor unit.
○	○	○	○	C1	Two or more change-over boxes are connected between outdoor unit and indoor unit.
○	○	○	X	C2	Nine or more indoor units are connected to change-over box.
X	○	○	X	C3	The indoor units of different systems are connected to change-over box.

○ : Flashing (Turn ON; 0.5 sec./Turn OFF; 0.5 sec.), X: Turn OFF.

3.2.1 Alarm Code Table

Code	Category	Content of Abnormality	Leading Cause
01	Indoor Unit	Activation of Protection Device (Float Switch)	Activation of Float Switch (High Water Level in Condensate Pan, Problem with Condensate Piping, Float Switch, or Condensate Pan)
03	Communication	Operational Irregularities between Indoor and Outdoor	Incorrect Wiring, Loose Terminals, Disconnect Wire, Blowout of Fuse, Outdoor Unit Power OFF
11	Sensor on Indoor Unit	Inlet Air Thermistor	Incorrect Wiring, Disconnecting Wiring Breaking Wire, Short Circuit
12		Outlet Air Thermistor	
13		Freeze Protection Thermistor	
14		Gas Piping Thermistor	
19	Fan Motor	Activation of Protection Device for Indoor Fan	Fan Motor Overheat, Lockup
31	System	Incorrect Capacity Setting of Outdoor Unit and Indoor Unit	Incorrect Capacity Code Setting of Combination Excessive or Insufficient Indoor Unit Total Capacity Code
35		Incorrect Setting of Indoor Unit No.	Duplication of Indoor Unit No. in same Refrigerant Group
b0		Incorrect Setting of Unit Model Code	Unit model code setting is not set or is set for the incorrect indoor unit type.
b1		Incorrect Setting of Unit and Refrigerant Cycle Number	There are 64 or More Number is Set for Address or Refrigerant Cycle.

3.2.2 Troubleshooting Using Alarm Codes

Alarm Code 01	Activation of Protection Device (Float Switch) in Indoor Unit

- The RUN indicator (red) flashes.
- The indoor unit number (refrigerant cycle number - address number), the alarm code, the model code[1], the model name[1] and the number of connected indoor units are displayed on the LCD. The indoor unit number and the alarm code are displayed on the 7-segment display of the outdoor unit PCB.
  Note 1: Except for some models.

This alarm code is displayed when the contact between #1 and #2 of CN14 on the I.U. PCB is opened for over 120 seconds during the cooling, dry, fan, or heating operation.

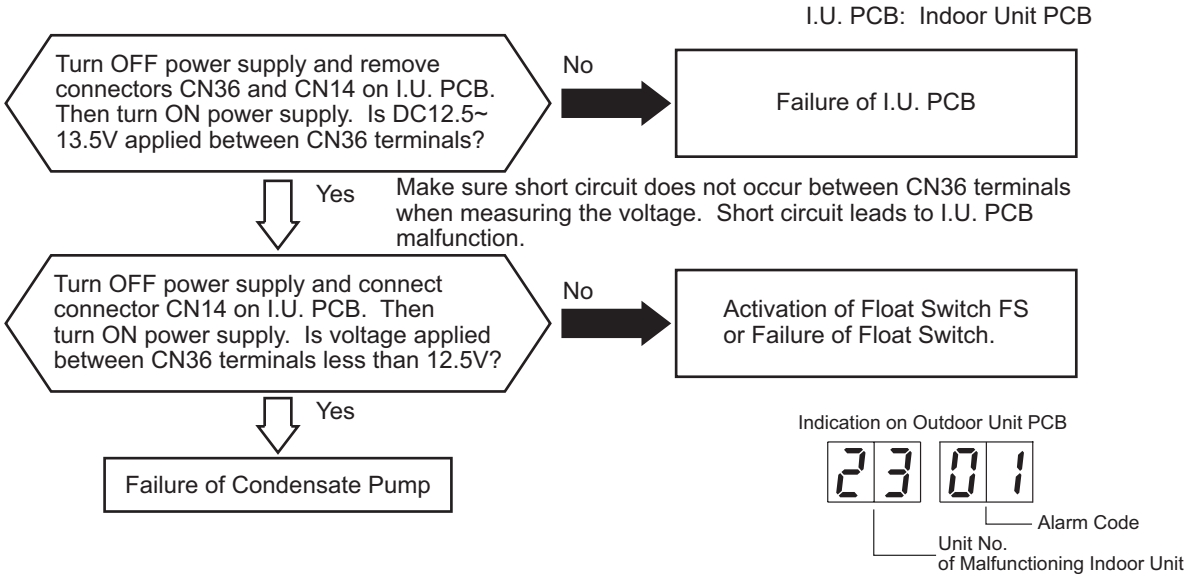

Event	Cause		Check Item	Action (Turn OFF Main Switch)
Activation of Float Switch	High Condensate Level	Clogging of Drainage Up-Slope Condensate Piping	Check condensate pan. Check drainage by pouring water.	Remove foreign particles clogging condensate pipe.
Failure of Float Switch	Failure		Check continuity when condensate level is low.	Replace float switch if faulty.
	Contact Failure		Measure resistance with a tester.	Replace and tighten connector.
	Incorrect Connection		Check connection.	Repair connection.
Failure of Condensate Pump	Failure		Measure voltage between CN36 terminals with a tester.	Replace condensate pump if faulty.
	Contact Failure		Measure resistance with a tester.	Replace and tighten connector.
	Incorrect Connection		Check connection.	Repair connection.
Failure of Indoor Unit PCB			Check PCB in Self-Checking Mode.[1]	Replace it if faulty.

1: Refer to Section 3.1.4 (3) above for details.

Alarm Code 03	Abnormal Communication between Indoor Units and Outdoor Units

- The RUN indicator (red) flashes.
- The indoor unit number (refrigerant cycle number - address number), the alarm code, the model code[1], the model name[1] and the number of connected indoor units are displayed on the LCD, and the indoor unit number and the alarm code are displayed on the 7-segment display of the outdoor unit PCB.
  Note 1: Except for some models.

This alarm code is displayed when an abnormal condition continues for three minutes after normal communication between indoor units and outdoor units. The abnormal condition continues for 30 seconds even after the micro-computer is automatically reset. If communication failure occurs from the beginning, the alarm code is displayed after 30 seconds from start up.
When fuses are blown, or the circuit breakers are activated, check the cause of overcurrent and take necessary action.

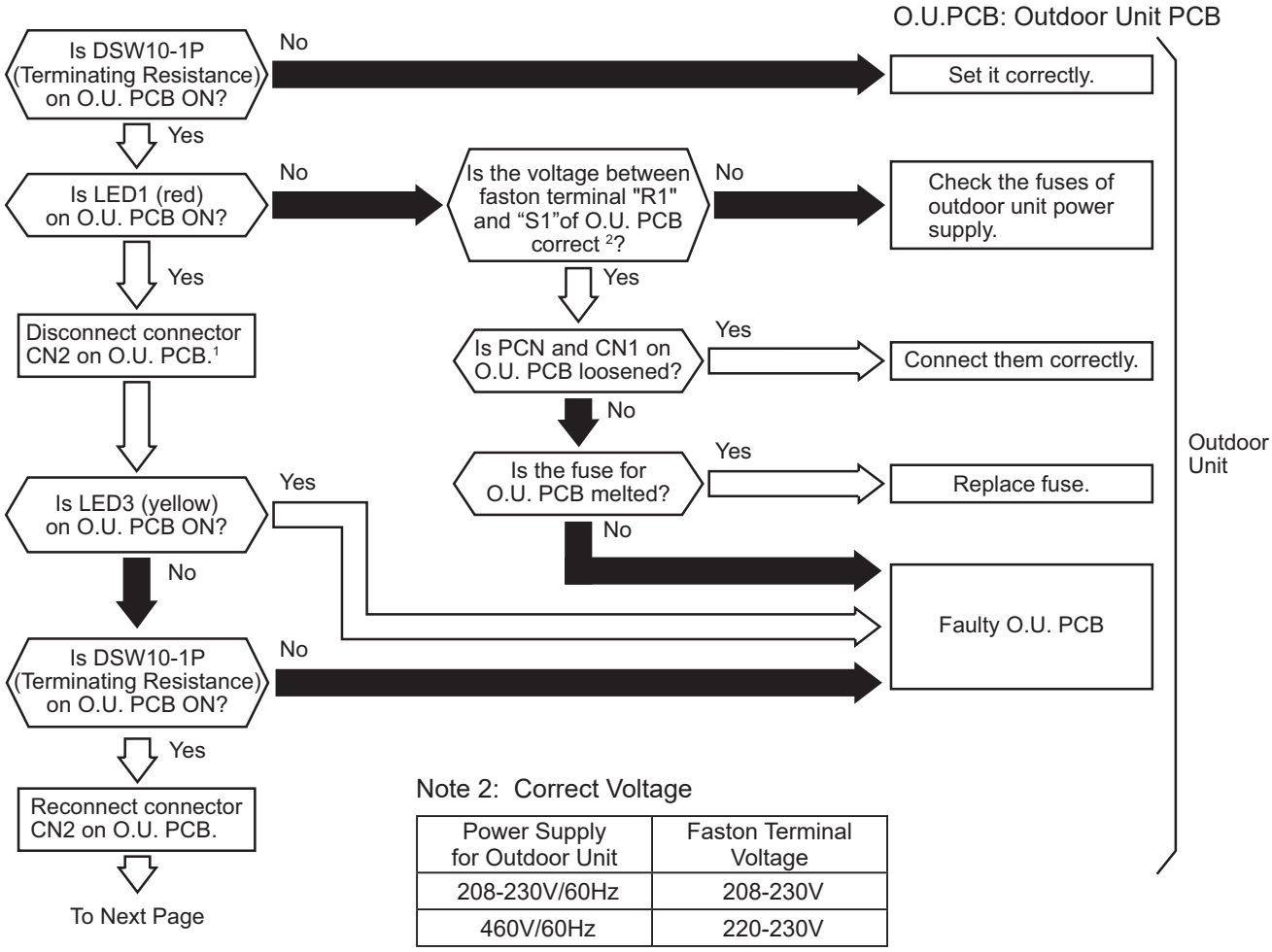

Note 2: Correct Voltage

Power Supply for Outdoor Unit	Faston Terminal Voltage
208-230V/60Hz	208-230V
460V/60Hz	220-230V

O.U. PCB: Outdoor Unit PCB
I.U. PCB: Indoor Unit PCB

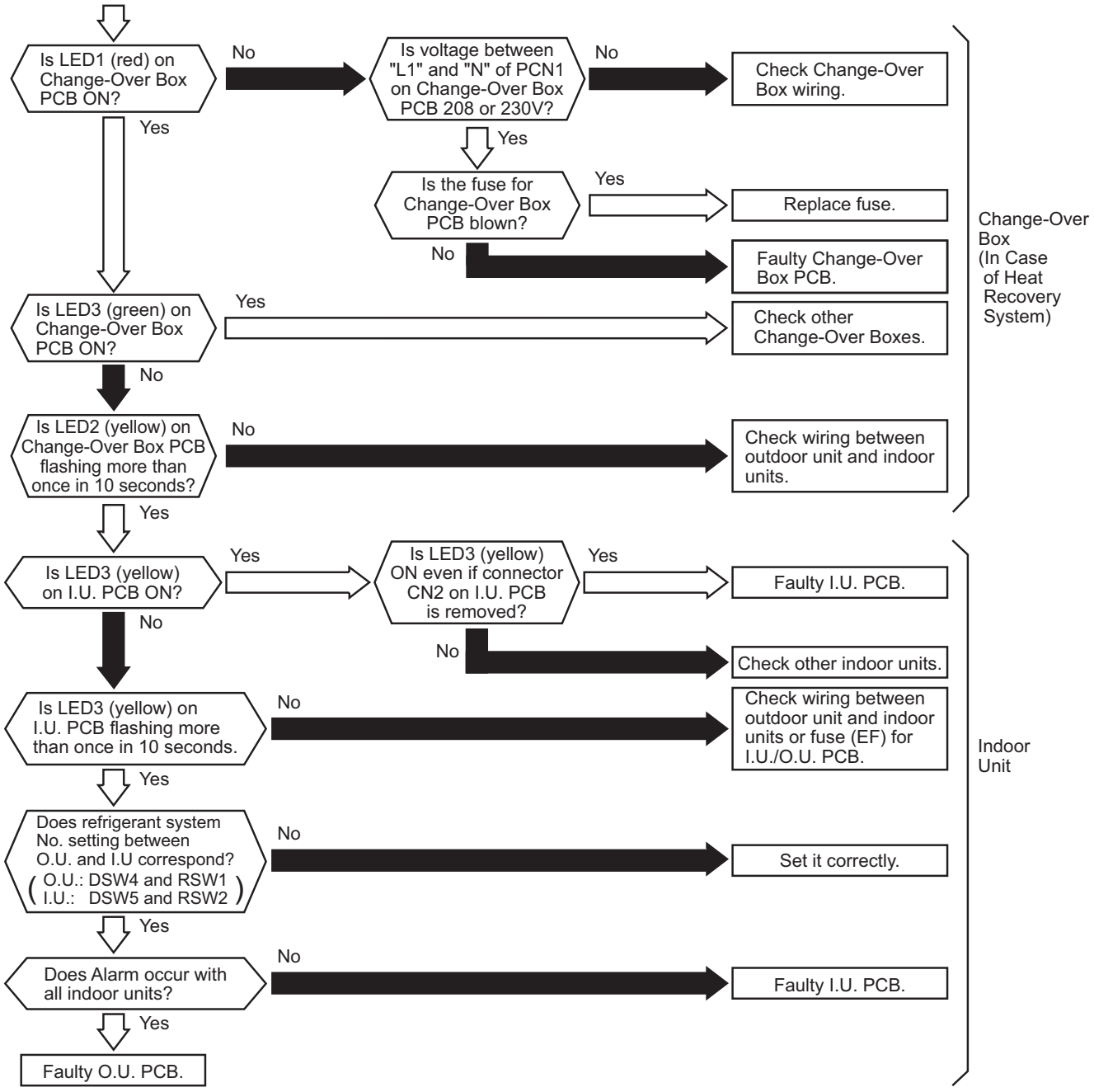

Event	Cause	Check Item	Action (Turn OFF Main Switch)
Power Failure or No Power Supply		Measure voltage with tester.	Supply power.
Blown Fuse for Power Supply or Activation of Breaker (Outdoor Unit and Change-Over Box)	Short Circuit between Wires	Check for breakage of insulation.	Remove cause of short circuit. Replace fuse and/or I.U./O.U. PCB if faulty.
	Short Circuit to Ground	Measure insulation resistance.	Remove cause of short circuit to ground. Replace fuse and/or I.U./O.U. PCB if faulty.
	Faulty Comp. Motor	Measure resistance between wires and insulation resistance.	Replace comp. and fuse. (O.U.) Replace inverter PCB and/or PCB if faulty. (O.U.)
	Faulty Outdoor Unit Fan Motor	Measure resistance between wires and insulation resistance.	Replace outdoor unit fan motor and fuse. Replace O.U. PCB if faulty.
Blown Fuse on PCB (Outdoor Unit)	Short Circuit between Wires	Check for breakage of wire insulation.	Remove cause of short circuit and replace fuse.
	Short Circuit to Ground	Measure insulation resistance.	Remove cause of short circuit and replace fuse.
	Faulty Solenoid Coil for Magnetic Switch (CMC) for Comp. Motor	Measure resistance of coil.	Replace magnetic switch (CMC) and fuse.
	Faulty Outdoor Unit Fan Motor	Measure resistance between wires and insulation resistance.	Replace fan motor and fuse.
Incorrect Power Supply Circuit of O.U. PCB		Measure O.U. PCB output. [2]	Replace O.U. PCB.
Disconnected Wires, Contact Failure or Incorrect Connection	Between Outdoor Unit and Indoor Unit	Check continuity of wires. Check for looseness of connection screws. Check terminal Nos.	Replace and repair wires, tighten screws or correct wires.
	Power Supply Wiring for Outdoor Unit		Correctly connect wires.
PCB Failure (Outdoor Unit, Indoor Unit)	Disconnected Wires to I.U./O.U. PCB	Check connection.	Correctly connect wires.
	Faulty I.U./O.U.PCB		Replace it if faulty.
Incorrect Wiring	Disconnected Wire Contact Failure	Check continuity and looseness of connection screws.	Replace or repair wires, or tighten screws.
	Incorrect Wiring	Check terminal Nos.	Correctly connect wires.

O.U. PCB: Outdoor Unit PCB
I.U. PCB: Indoor Unit PCB

1: If the end terminal resistance (DSW10) is set to OFF for H-LINK connection, set the end terminal resistance to ON when CN2 is disconnected. Set the end terminal resistance to OFF when CN2 is reconnected.

2: 12VDC between VCC12 and GND2
5VDC between VCC05 and GND1
12VDC between VCC12 and GND1
15VDC between VCC15 and GND1
24VDC between VCC24 and GND1
12VDC between VCC12T and GND1

Refer to the Service Manual of connected outdoor unit.

Alarm Code 11	Abnormality of Thermistor for Indoor Unit Inlet Air Temperature (Inlet Air Thermistor)

- The RUN indicator (red) flashes.
- The indoor unit number (refrigerant cycle number - address number), the alarm code, the model code[1], the model name[1] and the number of connected indoor units are displayed on the LCD. The indoor unit number and the alarm code are displayed on the 7-segment display of the outdoor unit PCB.
  Note 1: Except for some models.

This alarm code is displayed when a short (0.24kΩ or less) or open sensor (840kΩ or more) is detected during a heating or cooling operation. The operation automatically restarts when the malfunction is removed.

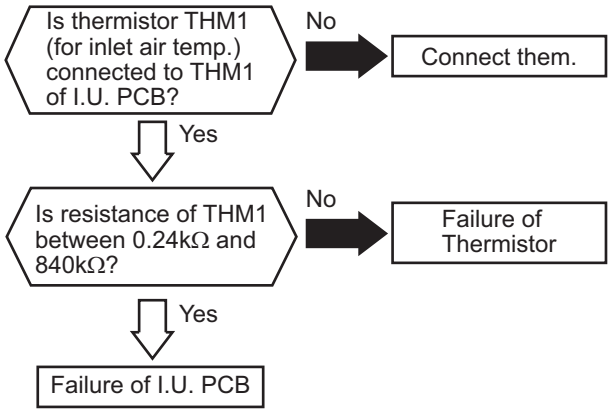

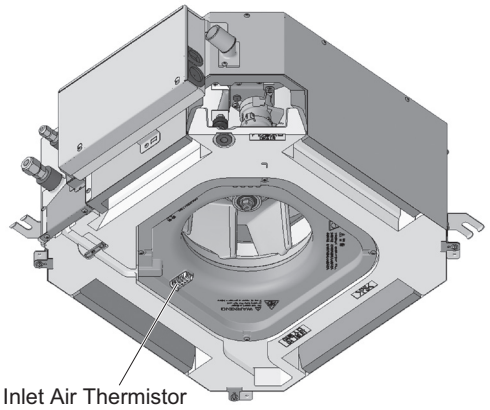

Event	Cause	Check Item	Action (Turn OFF Main Switch)
Failure of Inlet Air Thermistor	Failure	Check resistance.	Replace thermistor if faulty.
	Incorrect Connection	Check connection.	Correctly connect wires.
Failure of I.U. PCB		Replace I.U. PCB and check operation.	Replace I.U. PCB if faulty.

NOTICE:
This figure is applicable to the following thermistors.
1. Inlet Air Thermistor (THM1), 2. Liquid Pipe Thermistor (Freeze Protection) (THM3), 3. Gas Pipe Thermistor (THM5), 4. Outlet Air Thermistor (THM2), 5. Outside Air Thermistor or Remote Thermistor (THM4)

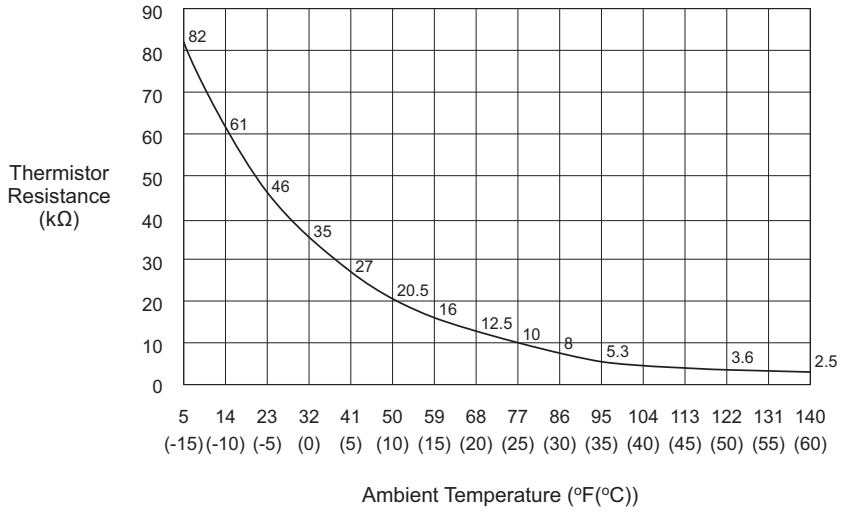

Thermistor Characteristics

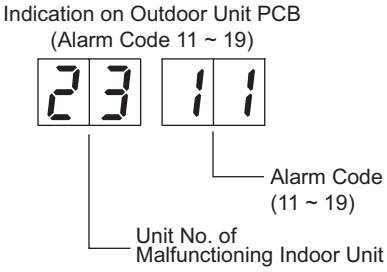

Alarm Code 12	Abnormality of Thermistor for Indoor Unit Outlet Air Temperature (Outlet Air Thermistor)

- The RUN indicator (red) flashes.
- The indoor unit number (refrigerant cycle number - address number), the alarm code, the model code[1], the model name[1] and the number of connected indoor units are displayed on the LCD. The indoor unit number and the alarm code are displayed on the 7-segment display of the outdoor unit PCB.
  Note 1: Except for some models.

This alarm code is displayed when a short (0.24kΩ or less) or open sensor (840kΩ or more) is detected during a heating or cooling operation. The operation automatically restarts when the malfunction is removed.

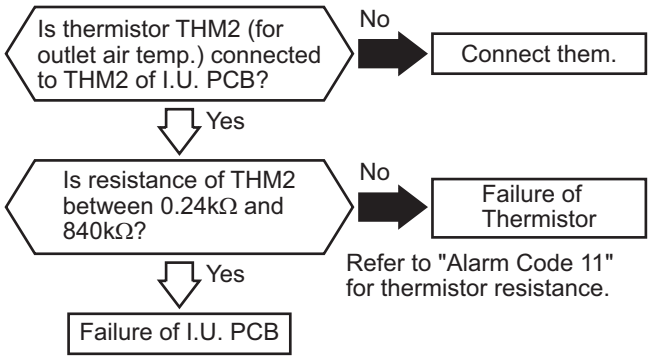

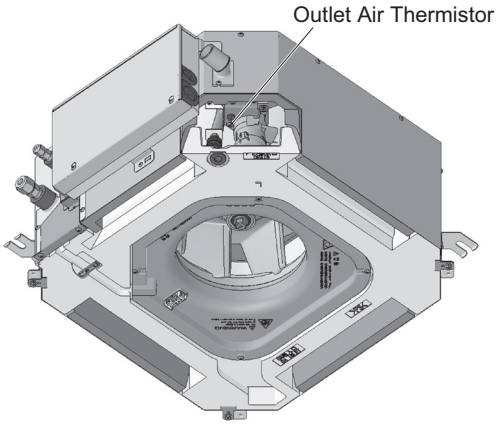

Event	Cause	Check Item	Action (Turn OFF Main Switch)
Failure of Outlet Air Thermistor	Failure	Check resistance.	Replace thermistor if faulty.
	Incorrect Connection	Check wiring to I.U. PCB.	Correctly connect wires.
Failure of I.U. PCB		Replace I.U. PCB and check operation.	Replace I.U. PCB if faulty.

Alarm Code 13	Abnormality of Thermistor for Liquid Refrigerant Pipe Temperature at Indoor Unit Heat Exchanger (Freeze Protection Thermistor)

- The RUN indicator (red) flashes.
- The indoor unit number (refrigerant cycle number - address number), the alarm code, the model code[1], the model name[1] and the number of connected indoor units are displayed on the LCD. The indoor unit number and the alarm code are displayed on the 7-segment display of the outdoor unit PCB.
  Note 1: Except for some models.

This alarm code is displayed when a short (0.24kΩ or less) or open sensor (840kΩ or more) is detected during a heating or cooling operation. The operation automatically restarts when the malfunction is removed.

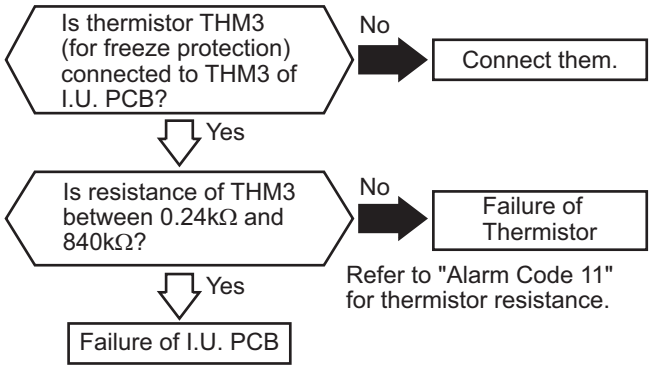

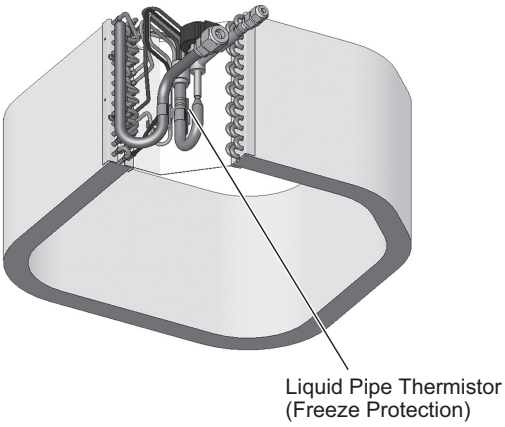

Event	Cause	Check Item	Action (Turn OFF Main Switch)
Failure of Freeze Protection Thermistor	Failure	Check resistance.	Replace thermistor if faulty.
	Incorrect Connection	Check wiring to I.U. PCB.	Correctly connect wires.
Failure of I.U. PCB		Replace I.U. PCB and check operation.	Replace I.U. PCB if faulty.

Alarm Code 14	Abnormality of Thermistor for Gas Refrigerant Pipe Temperature at Indoor Unit Heat Exchanger (Gas Pipe Thermistor)

- The RUN indicator (red) flashes.
- The indoor unit number (refrigerant cycle number - address number), the alarm code, the model code[1], the model name[1] and the number of connected indoor units are displayed on the LCD. The indoor unit number and the alarm code are displayed on the 7-segment display of the outdoor unit PCB.
  Note 1: Except for some models.

This alarm code is displayed when a short (0.24kΩ or less) or open sensor (840kΩ or more) is detected during a heating or cooling operation. The operation automatically restarts when the malfunction is removed.

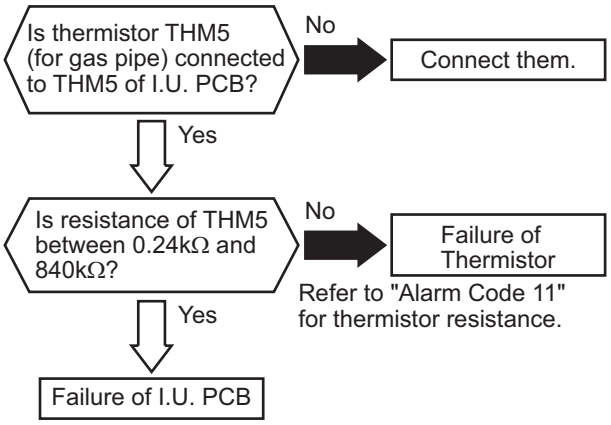

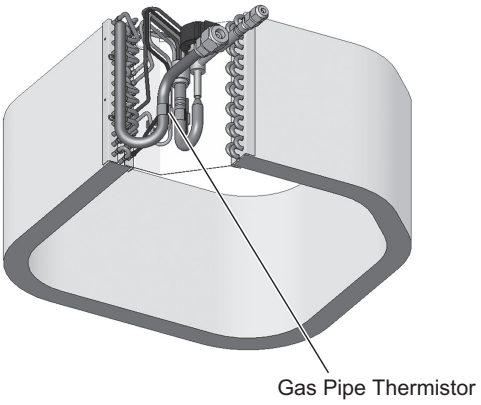

Event	Cause	Check Item	Action (Turn OFF Main Switch)
Failure of Thermistor for Indoor Unit Heat Exchanger Gas Pipe Temp.	Failure	Check resistance.	Replace thermistor if faulty.
	Incorrect Connection	Check wiring to I.U. PCB.	Correctly connect wires.
Failure of I.U. PCB		Replace I.U. PCB and check operation.	Replace I.U. PCB if faulty.

1: The heating operation is available only during the test run.

Alarm Code 19	Activation of Protection Device for Indoor Fan Motor (Indoor Unit with DC Motor)

- The RUN indicator (red) flashes.
- The indoor unit number (refrigerant cycle number - address number), the alarm code, the model code[1], the model name[1] and the number of connected indoor units are displayed on the LCD. The indoor unit number and the alarm code are displayed on the 7-segment display of the outdoor unit PCB.
  Note 1: Except for some models.

This alarm code is displayed when the indoor fan motor rotates at less than 70rpm for five seconds three times in 30 minutes during the operation. (Ⓐ)

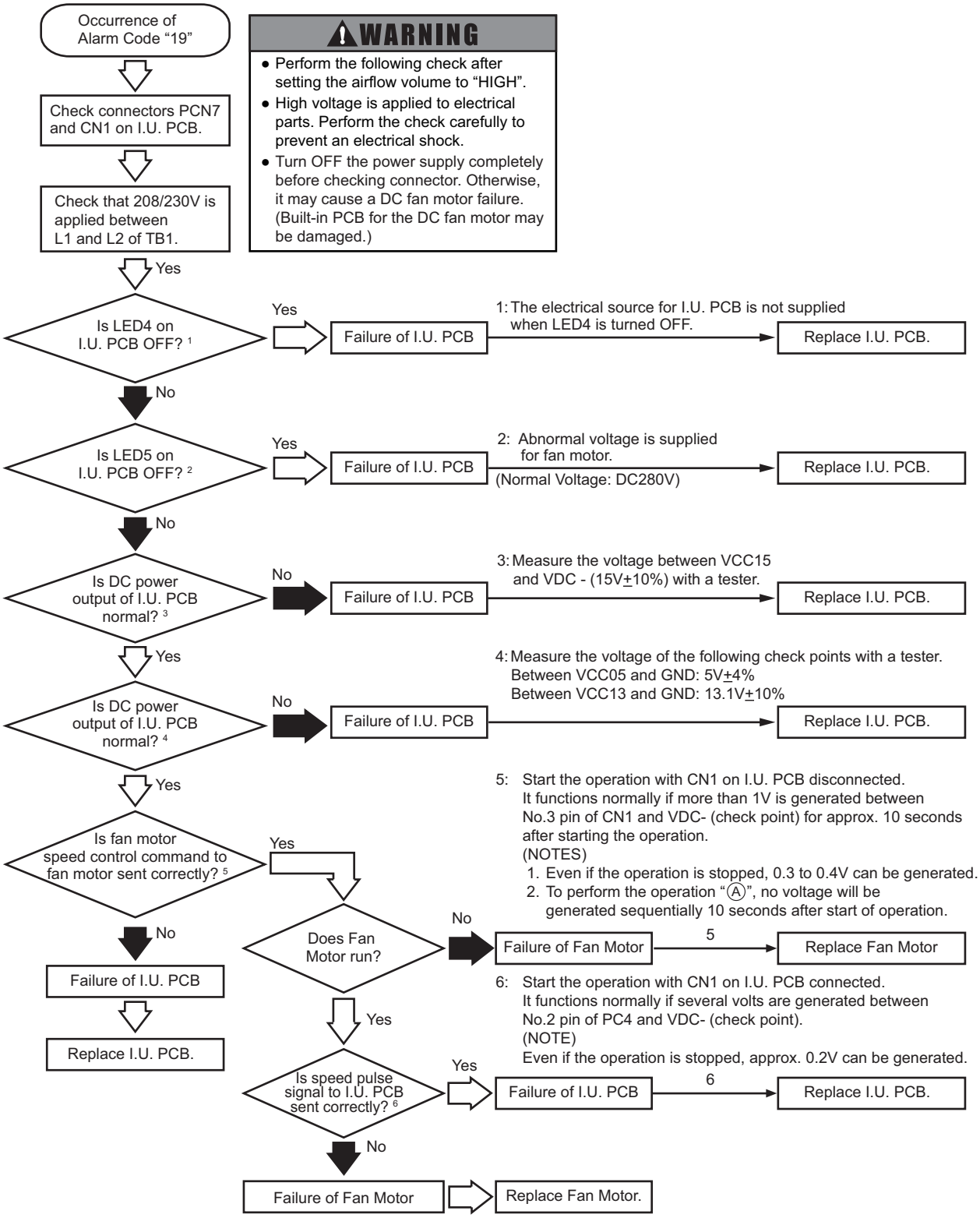

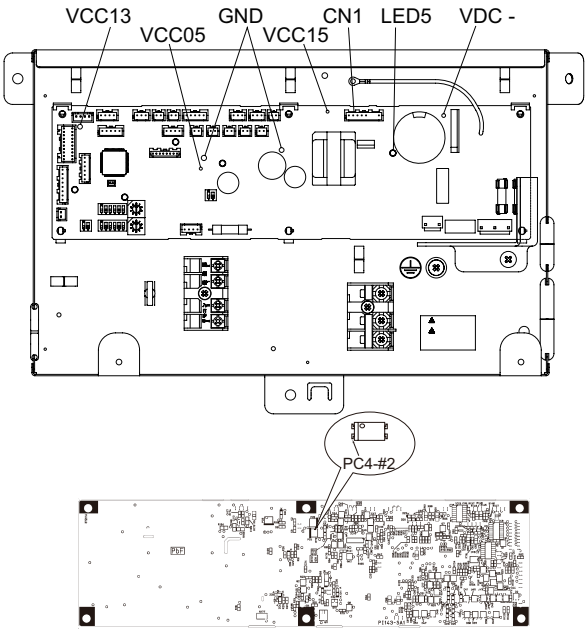

View from Backside of PCB

Checking for Fan Motor

Remove fan motor connector and measure the resistance value between each of the pins (twice, one measurement with +/- leads and the other with -/+ leads). Check whether the resistance value is over or not according to the table shown below. When performing the second measuring, make sure to switch leads (Red/ Black).

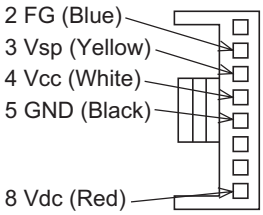

1st		
Tester		Resistance Value
Red	Black	Ω
FG	GND	
Vsp	GND	
Vcc	GND	
Vdc	GND	

2nd		
Tester		Resistance Value
Red	Black	Ω
GND	FG	
GND	Vsp	
GND	Vcc	
GND	Vdc	

Decision Basis
Resistance values of both 1st and 2nd measurings are over 10

Alarm Code 31	Incorrect Capacity Setting of Outdoor Unit and Indoor Unit

- The RUN indicator (red) flashes.
- The indoor unit number (refrigerant cycle number - address number), the alarm code, the model code[1], the model name[1] and the number of connected indoor units are displayed on the LCD. The alarm code is displayed on the 7-segment display of the outdoor unit PCB.
  Note 1: Except for some models.

1. This alarm code is indicated when the capacity setting DIP switch, DSW2, on the outdoor unit PCB, is not set (all the settings from #1 to #6 are OFF) or set incorrectly.
2. This alarm code is displayed when the total indoor unit capacity exceed the connectable indoor unit capacity ratio of outdoor unit.

O.U. PCB: Outdoor Unit PCB (PCB1)
I.U. PCB: Indoor Unit PCB

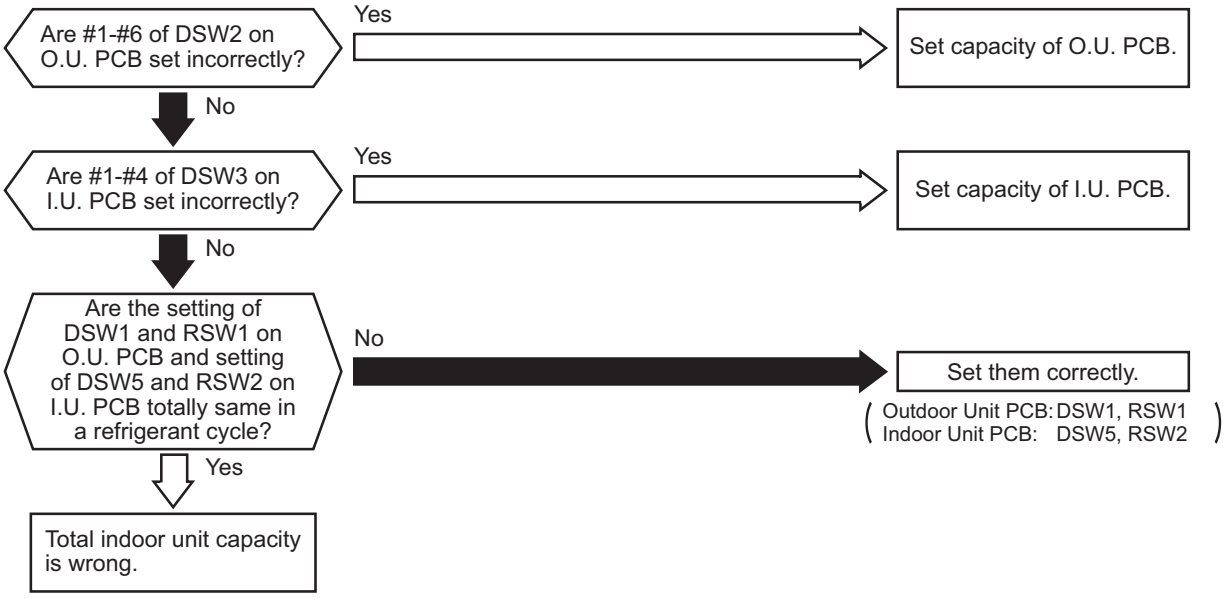

Event	Cause	Check Item	Action (Turn OFF Main Switch)
	Incorrect Capacity Setting of Indoor Unit	Check combination of indoor units and capacity setting of I.U. PCB.	Correctly set DIP switch, DSW3.
	Incorrect Capacity Setting of Outdoor Unit	Check capacity setting of O.U. PCB.	Correctly set DIP switch, DSW2.
	Total Indoor Unit Capacity Connected to Outdoor Unit is Beyond Permissible Range	Check outdoor unit model by calculating total indoor units capacity.	Ensure that total indoor unit capacity is within permissible range. [1]
	Refrigerant Cycle Setting of Outdoor Unit and Indoor Unit is Different	Check refrigerant cycle setting of O.U. PCB and I.U. PCB.	Set them correctly.

Refrigerant Cycle No. Setting

	Setting Switch	
	10 digit	1 digit
Outdoor Unit	DSW1	RSW1
Indoor Unit	DSW5	RSW2

Example of Setting Refrigerant Cycle No.25

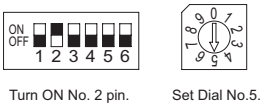

DSW and RSW factory setting is 0.
Maximum in setting refrigerant cycle No. is 63.

1: Refer to “Installation and Maintenance Manual” of outdoor unit for details.

Alarm Code 35	Incorrect Indoor Unit No. Setting

- The RUN indicator (red) flashes.
- The indoor unit number (refrigerant cycle number - address number), the alarm code, the model code[1], the model name[1] and the number of connected indoor units are displayed on the LCD. The indoor unit number and the alarm code are displayed on the 7-segment display of the outdoor unit PCB.
  Note 1: Except for some models.

This alarm code is displayed five minutes after power-on of the outdoor unit, if the indoor unit number set by DSW6 and RSW1 duplicates in the same refrigerant group.

Alarm Code b0	Incorrect Setting of Unit Model Code

- The RUN indicator (red) flashes.
- The indoor unit number (refrigerant cycle number - address number), the alarm code, the model code[1], the model name[1] and the number of connected indoor units are displayed on the LCD. The indoor unit number and the alarm code are displayed on the 7-segment display of the outdoor unit PCB.
  Note 1: Except for some models.

This alarm code is displayed in the following condition. Check the unit model code setting (DSW4) of I.U. PCB after turning OFF the power supply.

Condition	Action
The unit model code setting (DSW4) is not set (all pins are “OFF”), or is set for the incorrect indoor unit type.	Set DSW4 correctly according to the DIP switch setting in “Installation and Maintenance Manual“.

Alarm Code b1	Incorrect Setting of Unit and Refrigerant Cycle Number

- The RUN indicator (red) flashes.
- The indoor unit number (refrigerant cycle number - address number), the alarm code, the model code[1], the model name[1] and the number of connected indoor units are displayed on the LCD. The indoor unit number and the alarm code are displayed on the 7-segment display of the outdoor unit PCB.
  Note 1: Except for some models.

This alarm code is displayed in the following condition. Check the settings of the DIP switch (DSW) and the rotary switch (RSW) after turning OFF the power supply.

Condition	Action
The unit No. setting (DSW6 and RSW1) or the refrigerant cycle No. setting (DSW5 and RSW2) is set as “64” or more, or more than 2 pins of DSW5 or DSW6 are set.	a) Unit No. Setting / Ref. Cycle No. Setting Starting from “1” (recommended) Set the unit No. and the refrigerant cycle No. from “1” to “63”. (Setting No. for the 64th unit shall be “0”.) b) Unit No. Setting / Ref. Cycle No. Setting Starting from “0” Set the unit No. and the refrigerant cycle No. from “0” to “63.” (Setting No. for the 64th unit shall be “63”.)

3.2.3 Abnormalities of Devices

Other Abnormalities	Abnormalities of Devices

If there is no abnormality (Alarm Code) indicated on the wired controller, and normal operation is not available, take necessary action according to the following procedures.

Phenomenon	Cause		Check Item	Action (Turn OFF Main Switch)
"RUN" Indicator and LCD are ON. However, the system does not operate. (ex. Indoor/outdoor fans or compressor does not operate.)	Failure of Indoor Unit Fan Motor	Disconnected Coil	Measure coil resistance with tester.	Replace indoor unit fan motor.
		Burnt-Out Coil	Measure insulation resistance.	
	Failure of Outdoor Unit Fan Motor	Disconnected Coil	Measure coil resistance with tester.	Replace outdoor unit fan motor.
		Burnt-Out Coil	Measure insulation resistance.	
	Failure of Comp. Motor		Measure resistance between wires.	Replace compressor.
	Failure of Comp.		Check for abnormal sound from comp.	
	Failure of Magnetic Switch for Comp.	Contact Failure	Check whether magnetic switch is activated correctly or not.	Replace magnetic switch.
	Failure of One of PCBs (for outdoor unit, indoor unit, wired controller)	Disconnected Wire to PCB	Check connection.	Correctly connect wires.
		Failure of PCB	Check PCB in self-checking mode [1].	Replace PCB if faulty.
The Comp. does not Stop or Start even if the Setting temperature on LCD is Changed. [3]	Failure of Air Inlet Thermistor	Failure of Thermistor	Check it in Check Mode [2].	Replace or correctly connect wires if abnormal.
		Disconnection of Thermistor		
	Abnormality of Wired Controller Cable		Check it in Test Run.	
	Failure of Indoor Unit PCB		Check it in self-checking mode [1].	Replace PCB if faulty.

1: For CIW01, refer to Section 3.1.4 (3).
2: For CIW01, refer to Section 3.1.4 (2).
3: Even if controllers are normal, the compressor does not operate under the following conditions.
* Indoor Air Temp. is lower than 69.8°F (21°C) or Outdoor Air Temp. is lower than 23°F (-5°C) during cooling operation.
* Indoor Air Temp. is higher than 86°F (30°C) or Outdoor Air Temp. is higher than 73.4°F (23°C) during heating operation.
* When a cooling (or heating) operation signal is given to the outdoor unit and a different operation signal is given to indoor units.
* When demand signal or emergency stop signal is given to outdoor unit.

Other Abnormalities	Abnormalities of Devices

Event	Cause	Check Item	Action (Turn OFF Main Switch)
The Comp. does not stop or start even if the temperature setpoint on the LCD is changed. [3]	Incorrect Optional Setting	Check Setting Condition of "Thermistor of Wired Controller" with Optional Setting * Setting and Control "00": Control by Indoor Thermistor for Suction Air "01": Control by Thermistor of Wired Controller "02": Control by Average Value of Indoor Thermistor for Suction Air and Thermistor of Wired Controller	If the thermistor of wired controller is not used, set it at "00".
	Incorrect Input/Output Setting	Check Setting Condition of "i1" and "i2" by Input/Output Setting * Setting and Control "01": Room Thermostat (Cooling) "02": Room Thermostat (Heating)	If the room thermostat is not used, set for input signal actually used. If no signal is used, set it at "00".

1: For CIW01, refer to Section 3.1.4 (3).
2: For CIW01, refer to Section 3.1.4 (2).
3: Even if controllers are normal, the compressor does not operate under the following conditions.
* Indoor Air Temp. is lower than 69.8°F (21°C) or Outdoor Air Temp. is lower than 23°F (-5°C) during cooling operation.
* Indoor Air Temp. is higher than 86°F (30°C) or Outdoor Air Temp. is higher than 73.4°F (23°C) during heating operation.
* When a cooling (or heating) operation signal is given to the outdoor unit and a different operation signal is given to indoor units.
* When demand signal or emergency stop signal is given to outdoor unit.

Other Abnormalities	Abnormalities of Devices

Event	Cause		Check Item	Action (Turn OFF Main Switch)
Indoor Fan Speed is Not Changed	Failure of Discharge Air Temp. Thermistor	Failure of Thermistor	Check Thermistor in Self-Checking mode. [2]	Replace or correctly connect wires if abnormal.
		Disconnected Wire of Thermistor		
	Failure of Wired Controller		Check it in Self-Checking mode. [1]	Replace wired controller if faulty.
	Failure of Indoor Unit PCB			Replace PCB if faulty.
No Defrosting Operation Mode is Available while Heating Operation or Defrosting Operation is Continued	Failure of Thermistor for Outdoor Evaporating Temp. during Heating	Failure of Thermistor		Replace or correctly connect it if abnormal.
		Disconnected Wire of Thermistor		
	Failure of Reversing Valve	Disconnected Reversing Valve Coil	Measure resistance of coil.	Replace reversing valve.
		Incorrect Activation of Reversing Valve	Supply power forcibly.	
	Disconnected Control Wires between Indoor Unit and Outdoor Unit		Check connectors.	Correctly connect wires.
	Failure of Outdoor Unit PCB	Disconnected Wire to PCB	Check connectors.	Correctly connect wires.
		Failure of PCB	Check it in Self-Checking mode.[1]	Replace it when check mode is not available.
	Failure of Indoor Unit PCB	Disconnected Wire to PCB	Check connectors.	Correctly connect wires.
		Failure of PCB	Check PCB in Self-Checking mode. [1]	Replace PCB if faulty.
Light and LCD Indication on Wired Controller are Kept ON	Failure of PCB in Indoor Unit or Wired Controller			

1: For CIW01, refer to Section 3.1.4 (3).
2: Refer to Section 3.1.4 (2).

Other Abnormalities	Abnormalities of Devices

Event	Cause		Check Item	Action (Turn OFF Main Switch)
Insufficient Cooling Operation	Indoor Heat Load is Larger than Cooling Capacity		Calculate heat load.	Use a larger unit.
	Excessively Low Suction Pressure	Gas Leakage or Shortage of Refrigerant	Measure superheat.	Correctly charge refrigerant after repairing gas leakage.
		Excessively Small Diameter Tube or Long Piping	Measure and check field-supplied pipes.	Use correct pipes.
		Incorrect Activation of Check Valve of Outdoor Unit	Check whether or not temp. difference exists before/after check valve.	Replace check valve for outdoor unit.
		Failure or Malfunction of Electronic Expansion Valve	Check for any clogging.	Remove clogging.
			Check connection cord and connector.	Replace connector.
			Is there operation sound from coil?	Replace coil.
			Is thermistor on compressor normal?	Replace thermistor.
			Is thermistor installed correctly on compressor?	Correctly install it.
		Clogged Strainer in Indoor Unit Clogging at Low Pressure Piping	Check temp. difference at inlet and outlet of strainer.	Replace strainer in indoor unit.
		Clogging at Low Pressure Piping	Check temp. difference.	Remove clogging.
		Insufficient Airflow to Indoor Unit Heat Exchanger	Check for clogged air filter.	Clean air filter.
			Check for obstacle at inlet or outlet.	Remove obstacles.
		Excessively Low Air Temp. to Indoor Unit Heat Exchanger	Insufficient revolution of indoor unit fan motor?	Replace fan motor.
			Check short-circuited indoor unit air.	Remove cause of short-circuited.
	Activation of Motion Sensor Control		“Motion Sensor is activated” is indicated on Wired Controller	It is normal.

Other Abnormalities	Abnormalities of Devices

Event	Cause		Check Item	Action (Turn OFF Main Switch)
Insufficient Cooling Operation	Excessively High Discharge Pressure	Insufficient Airflow to Outdoor Unit Heat Exchanger	Check clogging of outdoor unit heat exchanger.	Remove clogging.
			Obstacles at inlet or outlet of outdoor unit heat exchanger?	Remove obstacles.
			Is service space for outdoor unit sufficient?	Secure sufficient service space.
			Correct fan speed?	Replace fan motor.
		Excessively High Air Temp. to Outdoor Unit Heat Exchanger	Short-circuited outdoor unit air	Remove cause of short-circuit.
			Any other heat load near outdoor unit?	Remove heat source.
		Excessively Charged Refrigerant	Check expansion valve opening.	Correctly charge refrigerant.
		Non-Condensable Gas in Cycle	Check each temp. and pressure.	Charge refrigerant after vacuum pumping.
		Clogging of Discharge Piping	Check for clogging.	Remove clogging.
		Failure or Malfunction of Expansion Valve	Check for clogging.	Remove clogging.
			Check for connecting wire and connector.	Replace connector.
			Is there operation sound from coil?	Replace coil.
			Is thermistor on compressor normal?	Replace thermistor.
			Is thermistor installed correctly on compressor?	Correctly install it.
	Malfunction or Internal Leakage from Reversing Valve		Check temp. difference between inlet and outlet of reversing valve.	Replace reversing valve.
	Excessively Low Suction Pressure	Failure of Solenoid Valve for Bypass	Check leakage from solenoid valve.	Replace solenoid valve.
		Malfunction or Internal Leakage from Reversing Valve	Check temp. difference between inlet and outlet of reversing valve.	Replace reversing valve.
	Discharge Temp. of Indoor Unit is Unstable.		Check for expansion valve of indoor unit in the same system.	Replace failed expansion valve of indoor unit.

Other Abnormalities	Abnormalities of Devices

Event	Cause		Check Item	Action (Turn OFF Main Switch)
Insufficient Cooling Operation	Communication Failure	Communication Failure between I.U. and O.U.	Check indoor unit indicating alarm code “03” on wired controller.	Repair it according to alarm code “03”.
		Insufficient Power Supply to Indoor Unit.	Check wired controller LCD or “RUN” indicator is turned OFF.	Check indoor unit according to “Troubleshooting” of this manual.
		Failure of Indoor Unit PCB	Check that indoor unit capacity is 0 in check mode of outdoor unit PCB.	Replace indoor unit PCB.
	Failure of EconoFresh Kit.		Check that damper of EconoFresh Kit opens and closes.	Replace relay wiring.
				Change damper minimum opening.

Other Abnormalities	Abnormalities of Devices

Event	Cause		Check Item	Action (Turn OFF Main Switch)
Insufficient Heating Operation	Indoor Heat Load is Larger than Heating Capacity		Calculate heat load.	Use larger unit.
	Excessively Low Suction Pressure	Gas Leakage or Insufficient Refrigerant Charge	Measure superheat.	Correctly charge refrigerant after gas leakage check and repair.
		Excessively Small Diameter or Long Piping	Measure field-supplied pipes.	Use specified pipes.
		Failure or Malfunction of Electronic Expansion Valve	Check for clogging.	Remove clogging.
			Check for connecting cord and connector.	Replace connector.
			Is there operation sound from coil?	Replace coil.
			Is thermistor on compressor normal?	Replace thermistor.
			Is thermistor installed correctly on compressor?	Correctly install it.
		Clogging of Indoor Unit/ Outdoor Unit Strainer	Check temp. difference between inlet and outlet of strainer.	Replace strainer for outdoor unit or indoor unit.
		Clogging of Suction Piping	Check temp. difference of each part.	Remove clogging.
		Insufficient Airflow to Outdoor Unit Heat Exchanger	Is outdoor unit heat exchanger clogged?	Remove clogging.
			Are there any obstacles at inlet or outlet of outdoor unit?	Remove obstacles.
			Is service space for outdoor unit sufficient?	Secure sufficient service space.
			Check outdoor fan speed.	Replace fan motor.
		Excessively Low Air Temp. to Outdoor Unit Heat Exchanger	Check for any short-circuited outdoor unit air.	Remove cause of short circuit.
		Defrosting is Insufficiently Completed	Check thermistor for defrosting.	Replace thermistor for defrosting.

Other Abnormalities	Abnormalities of Devices

Event	Cause		Check Item	Action (Turn OFF Main Switch)
Insufficient Heating Operation	Communication Failure	Communication Failure between I.U. and O.U.	Check indoor unit indicating alarm code “03” on wired controller.	Repair it according to alarm code “03”.
		Insufficient Power Supply to Indoor Unit.	Check wired controller LCD or “RUN” indicator is turned OFF.	Check indoor unit according to “Troubleshooting” of this manual.
		Failure of Indoor Unit PCB	Check that indoor unit capacity is 0 in check mode of outdoor unit PCB.	Replace indoor unit PCB.
	Failure of EconoFresh Kit.		Check that damper of EconoFresh Kit open and closes.	Replace relay wiring.
				Change damper minimum opening.

Other Abnormalities	Abnormalities of Devices

Event	Cause		Check Item	Action (Turn OFF Main Switch)
Insufficient Heating Operation	Excessively High Discharge Pressure	Insufficient Airflow to Indoor Unit Heat Exchanger	Check for filter clogging.	Remove clogging.
			Check for any obstacles at inlet or outlet of indoor unit.	Remove obstacles.
			Check indoor fan speed.	Replace fan motor.
		Excessively High Air Temp. to Indoor Unit Heat Exchanger	Check whether short circuit exists.	Remove cause of short circuit.
		Excessively Charged Refrigerant	Check expansion valve opening.	Correctly charge refrigerant.
		Non-Condensable Gas in Ref. Cycle	Check refrigerant quantity.	Recharge refrigerant after vacuum pumping.
		Clogging of Discharge Piping	Check for clogging.	Remove clogging.
	Malfunction or Internal Leakage of Reversing Valve		Check temp. difference between inlet and outlet of reversing valve.	Replace reversing valve.
	Malfunction of Check Valve of Outdoor Unit		Check temp. difference between inlet and outlet of check valve.	Replace check valve.
	Excessively High Suction Pressure	Failure of Solenoid Valve for Bypass	Check for refrigerant leakage from solenoid valve.	Replace solenoid valve.
		Malfunction or Internal Leakage from Reversing Valve	Check temp. difference between inlet and outlet of reversing valve.	Replace reversing valve.
	Discharge Temp. of Indoor Unit is Unstable.		Check for expansion valve of indoor unit in same system.	Replace failed expansion valve of indoor unit.
	Activation of Motion Sensor Control		“Motion Sensor is activated” is indicated on Wired Controller	It is normal.

Other Abnormalities	Abnormalities of Devices

Event	Cause		Check Item	Action (Turn OFF Main Switch)
Cooling or Heating Operation with Abnormal Sound	Foreign Particles Inside Fan Casing		Check it by viewing.	Remove foreign particles.
	Indoor Unit Fan Wheel Contacts Casing		Check it by viewing.	Adjust position of fan wheel.
	Outdoor Unit Propeller Fan Comes in Contact with Fan Shroud		Check it by viewing.	Adjust position of propeller fan.
	Abnormal Sound from Compressor	Failure of Installation	Check each part is tightly secured.	Tightly secure it.
		Liquid Ref. Compression	Check expansion valve opening.	Ensure superheat.
		Wear or Breakage of Internal Comp. Parts	Is there any abnormal sound from inside of compressor?	Replace compressor.
		Crankcase Heater does Not Get Warm	Check resistance of crankcase heater or fuse.	Replace crankcase heater or fuse.
	Humming Sound from Magnetic Contactor		Check surface of contacts.	Replace magnetic switch.
	Abnormal Vibration of Cabinets		Check each tightening screws.	Tightly secure it.
Outdoor Fan does Not Operate even when Compressor is Operating	Obstacle at Outdoor Fan		Check obstacles.	Remove obstacles.
	Preparatory State for Heating Operation		Wait for switching of reversing Valve. (1 to 3 minutes)	If the reversing valve is not switched, check for insufficient refrigerant.
Indoor Fan does Not Operate even when Compressor is Operating	Discharge pressure does not increase higher than 319 psi (2.2MPa) due to insufficient refrigerant.		Check operation pressure.	Add refrigerant.
	Disconnected Wire for Indoor Fan		Check wiring.	Correctly connect wires.
	Failure of AC chopper		Check AC chopper.	Replace AC chopper.

Other Abnormalities	Abnormalities of Devices (Motion and Radiation Sensor)

Event	Cause	Check Item	Action (Turn OFF Main Switch)
"Motion Sensor is activated" is indicated on Wired Controller LCD.	Reaction rate is always 100%.	Check the "Check Mode 1: q1" on the wired controller. ↓ Check if there is motion sensor with "Reaction rate always 100%".	True: Replace motion and radiation sensors PCB. False: Replace control PCB.
Operation Stops though Someone is Present.	Reaction rate is always 0%.	Operate under detection area of motion sensor and check the "Check Mode 1: q1" on the wired controller. ↓ Check if there are motion sensors with "Reaction rate always 0%".	True: Replace motion and radiation sensors PCB.
Not Operating in "Avoid Air" or "Receive" though Someone is Present.			False: Sensitivity may be low. Adjust the [Optional Function: K6] to [01: High Sensitivity] and see if there are any changes. If the symptom continues, replace motion and radiation sensors PCB.
Operation Continues though No One is Present.	Motion sensor setting is disabled on the wired controller.	Check setting on the wired controller.	Correct the setting.
	Motion sensor setting of No presence is set to other than "Stop" on the wired controller.	Check setting on the wired controller.	Correct the setting.
	There are heat source other than human in the detecting area of the sensor.	Check heat source (a moving object whose temperature is different from surroundings).	Remove it.
	There is sensor with high sensitivity.	Stop the operation from the wired controller, no motion in the detection area of the motion sensor and check the "Check Mode 1: q1". ↓ Check if there is no motion sensor with "Reaction rate 0%".	True: Replace motion and radiation sensors PCB. False: No problem. Adjust the [Optional Function: K6] to [02: Low Sensitivity] and see if there are any changes. If the symptom continues, replace motion and radiation sensors PCB.
		Operating in "Avoid Air" or "Receive".	
Operating in "Avoid Air" or "Receive" though No One is Present.	15 minutes has not passed since someone left the room.	Check the louver operation after no one has been in the room for more than 15 minutes.	Not operating in "Avoid Air" or "Receive". This is normal operation.
	There are heat sources other than human in the detection area of the sensor.	Check heat source (a moving object whose temperature is different from surroundings).	Remove it.
"Radiation Sensor is activated" is indicated on Wired Controller LCD.	Radiation sensor element is abnormal.		Replace motion and radiation sensors PCB.

Other Abnormalities	Abnormalities of Devices (Motion and Radiation Sensor)		
Event	**Cause**	**Check Item**	**Action (Turn OFF Main Switch)**
Operation of Heating Radiation Sensor though the Room is already Heated.	Setpoint on the wired controller is high and the difference against the radiated temperature is big.	Immediately after "Radiation Sensor is activated" indication on wired controller LCD, check the "Check Mode 1: q2". ↓ Check if there is more than 7°F (4°C) difference between the radiated temperature and the setpoint on the wired controller.	True: No problem. This control targets the setpoint on the wired controller with heating operation. If setpoint is high, this control is activated even though the room is heated.
			False: Replace control PCB.
	Radiated temperature is detected as low.	Stop the operation from the wired controller and check the "Check Mode 1: q2". ↓ Check if there is more than 18ºF (10ºC) differences between the temperature near to the floor*1 and radiated temperature.	True: Replace motion and radiation sensors PCB.
			False: Adjust the [Optional Function: K7] to [01: Upward] and see if there are any changes. If the symptom continues then replace motion and radiation sensors PCB.
No Operation of Heating Radiation Sensor though the Room is Cold.	Radiation sensor setting is disabled on the wired controller.	Check setting on the wired controller.	Correct the setting.
	There is a heat sources other than human in the detection area of the sensor.	Check heat source (a moving object whose temperature is different from surroundings).	Remove it. Depending on the heat source, the control is hard to operate.
	Setpoint on the wired controller is low and the difference against the radiated temperature is small.	Immediately after "Radiation Sensor is activated" indication on wired controller LCD, check the "Check Mode 1: q2". ↓ Check if there is less than 5ºF (3ºC) difference between the radiated temperature and the setpoint on the wired controller.	True: No problem. This control will not operate when the difference between setpoint on the wired controller and radiated temperature is small.
			False: Replace control PCB.
	Radiated temperature is detected as high.	Stop the operation from the wired controller and check the "Check Mode 1: q2". ↓ Check if there is more than 18ºF (10ºC) difference between the temperature near to the floor [1] and radiated temperature.	True: Replace motion and radiation sensors PCB.
			False: Adjust the [Optional Function: K7] to [02: Downward] and see if there are any changes. If the symptom continues, replace motion and radiation sensors PCB.
Motion Sensor Setting is not indicated on the Wired Controller.	Communication error between indoor unit control PCB and motion and radiation sensors PCB.	Check connection and connectors.	If the symptom continues, replace motion and radiation sensors PCB.

1: Prepare thermometer for checking. Make sure there are no heat sources before taking measurement.

3.3 Procedures for Checking

3.3.1 Self-Checking of PCBs using Wired Controller

Refer to Section 3.1.4 “Checking Wired Controller”

3.3.2 Self-Checking of Wired Controller

Refer to Section 3.1.4 “Checking Wired Controller”

3.4 Test Run

Turn OFF all the power supply switches.
Use a tester and make sure that all the switches are turned OFF.

Before the test run, check that the unit is appropriately installed according to the Installation and Maintenance Manual. After that, inspect the following items.

Check Item		Contents
1	Damage	Are the unit appearance and inside of the unit damaged?
2	Fan Motor	Is the fan motor runner installed in the center of the casing? Is the fan motor installed away from the casing? (The fan motor should NOT be touched by the casing.)
3	Fasteners	Are the screws loose due to vibration during transportation? Check that the fasteners are secured firmly during installation, especially for electrical wiring.
4	Refrigerant Leaks	Check that there are NO refrigerant leaks. The tightening part of the pipe (flare part) may be loose because of vibration during transportation.
5	DSW Setting	Check that the DSW setting is the same as the factory setting. (Refer to Section 3.1.3.)
6	Insulation [1]	Measure resistance between electrical component terminal and ground with a tester. It is normal if the resistance is 1MΩ and over. If 1MΩ or less, do not perform the operation due to insulation failure of electrical parts. Do NOT apply electricity to the terminal board of operating line. (Control PCB may be damaged.)
7	Stop Valve Fully Open	Prior to test run, check that the stop valve of the outdoor unit is completely open.
8	Power Supply Phase	The operation is NOT possible with the incorrect power phase order or lacking phase. • Alarm “05” will be indicated on the LCD of the wired controller. • “05” will be indicated on the 7-segment display of the outdoor unit. Check the power supply phase according to the caution label attached close to the outdoor unit terminal block or inside of the service cover.
9	Turn ON Crankcase Heater [2]	After completion of item checks 1 to 8, turn ON the power supply of the outdoor unit. Apply power to the outdoor unit(s) at least 12 hours prior to operation of the system for preheating of the compressor oil..
10	Indoor and Outdoor Temperature	<For Use in both Cooling and Heating Operation> Are indoor and outdoor temperature out of the working range? (Heating operation may not be operated due to the activation of the overload operation prevention under the ambient temperature of 66°F (19°C) or over.) To perform the test run, set the test run mode with the wired controller.

1: Insulation Resistance

- If the unit has been turned OFF for long periods, insulation resistance may decrease to 1MΩ or less because the refrigerant is retained in the compressor. Check the following points.

(a) Disconnect the cables of the compressor and measure the insulation resistance of the compressor itself. If the resistance is 1MΩ or less, an insulation failure of another electrical charge part has occurred.

(b) If the resistance is 1MΩ or less, reconnect the compressor and turn ON the main power supply. The compressor will warm up automatically. Check the insulation resistance again after applying current for at least three hours. (Preheating time depends on the air condition, piping length or refrigerant condition.)

- Before the leakage breaker is activated, check the rated capacity.

2: Stoppage of Compressor Operation

The compressor may NOT be operational for a maximum of four hours if the power supply is NOT turned ON in advance.
At this time, the stoppage Code (d1-22) is displayed on the LCD of wired controller and the forced Thermo-OFF function starts.
If operation of the compressor is necessary, turn ON the power supply of the outdoor unit, wait for 30 seconds and press PSW5 on the outdoor unit PCB for at least three seconds. The forced Thermo-OFF function (d1-22) will be canceled and the compressor operation will be available.

3: Working Range

Refer to “Page i” of Installation for details.

NOTE:
Thermo-ON: The outdoor unit and some indoor units are running.
Thermo-OFF: The outdoor unit and some indoor units stay on, but don't run.

3.4.1 Test Run Using Wired Controller

(1) Wired Controller (CIW01)

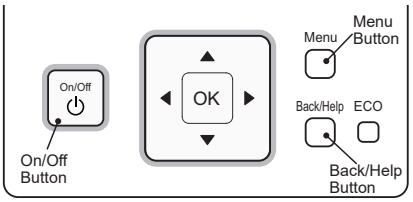

(1) Turn ON the power supply of the indoor and outdoor units.
(2) Set the TEST RUN mode with the wired controller.

Press and hold the "Menu" and the "Back/Help" buttons simultaneously for more than three seconds.
Select “Test Run” by pressing “ △▽ ” and press “OK”.
The Test Run screen is displayed.
NOTE:
For other controllers,
refer to the “Installation Manual” for each controller.

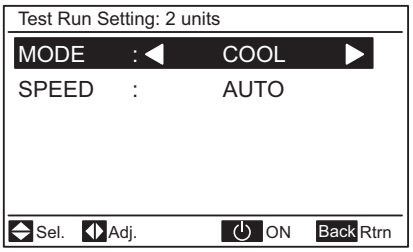

Normal → If "TEST RUN" and the total number of the units connected to the wired controller (for example "2 units") are indicated on the wired controller, the connection of the controller cable is correct.

* The total number of indoor units connected is indicated on the liquid crystal display (LCD).
* If the indicated number is not equal to the actual number of connected indoor units, the auto-address function is not performed correctly due to incorrect wiring, or electromagnetic interference. Turn OFF the power supply, and correct the wiring after checking the following points (Do not repeat turning ON and OFF within 10 seconds.)
  (a) The power supply for the indoor unit is NOT turned ON or the incorrect wiring.
  (b) Loose connection between Indoor Units or Wired Controller.
  (c) Incorrect Setting of Indoor Unit Address (The indoor unit address is duplicated.)

NOTE:
When “00 unit” is indicated, the auto-address function may be performing.
Cancel “Test Run” mode and set it again.

Abnormal → If no indication or "00" appears, or the number of the units indicated is less than the actual number of the units, there is an abnormality.

(3) Checking Procedure for Abnormalities

Wired Controller Indication	Fault	Inspection Points after the Power Supply OFF
No Indication	* The power supply is not turned ON. * The connection of the controller cable is incorrect.	1. Connection between Connector and Wires 2. Connecting Points of Controller Cable 3. Contact of Connectors of Controller Cable
	* The connecting wires of power supply line are incorrect or loose.	4. Connection Order of each Terminal Block 5. Screw Fastening of each Terminal Block
Number of connected units is incorrect.	* The electrical wiring between indoor unit and outdoor unit is disconnected, or the power supply is not turned ON.	
	* The setting of unit number is incorrect.	6. RSW Setting on Indoor Unit Printed Circuit Board
	* The connection of control cables between each indoor unit are incorrect. (When one wired controller controls multiple units.)	7. Wire Connecting Order of Bridge Cable 8. Connecting Points of Bridge Cable 9. Contact of Connectors of Bridge Cable

Back to (1) after checking

Move to (4) on the next page.

(4) Press “On/Off” button.

Normal → The test run operation is started. The operation mode, the airflow volume, the airflow direction and the test run time can be set on the Test Run screen.
Select the item by pressing “△▽◁▷”.
The test run is completed by pressing the “Back/Help” button during the stoppage or “On/Off” button during the operation.

Abnormal → If the units do not start or the operation light on the wired controller flashes, there is an abnormality.

(5) Checking Procedure for Abnormalities

Wired Controller Indication	Unit Condition	Fault	Inspection Points when the Power Supply is OFF
The operation light flashes. (1 time/1 sec.) And the Unit No. and Alarm Code "03" flash.	The unit does not start.	The power supply is not turned ON.	
		The connecting wires of operating line are incorrect or loose.	1. Connecting Order of each Terminal Block. The fuse on the PCB may be blown due to miswiring. (Can be recovered only once by the DSW on the PCB) Procedures for Recovery When Transmitting Circuit Fuse is Blown 1. Correct the wiring for the terminal block. 2. Setting positions of the model code are shown below. Indoor Unit PCB: DSW7 ON OFF 1 2 Outdoor Unit PCB: DSW10 ON OFF 1 2 2. Screw Fastening of each Terminal Block. 3. Connecting Order of Power Line Between Indoor Units and Outdoor Unit.
The operation light flashes. (1 time/2 sec.)	The unit does not start.	The connection of controller cable is incorrect.	This is the same as above items 1 through 3.
Other alarm codes or indications than those above (Refer to the Alarm Code Table.)	The unit does not start, or starts once and then stops.	The connection of the thermistors or other connectors are incorrect. Tripping of protector exists.	An authorized service person should check the unit using the Alarm Code Table in this manual.
The operation light flashes. (1 time/1 sec.) And the Unit No. ***00***. Alarm Code ***dd*** and Unit Code ***E.00*** flash.	The unit does not start.	The connecting wires of operating line are incorrect or loose.	An authorized service person should check the unit using the Alarm Code Table in this manual.

Back to (1) after checking

3.4.2 Test Run from Outdoor Unit Side

Refer to the Service Manual for Outdoor Unit.

3.4.3 Checking the Test Run

< Voltage Change >

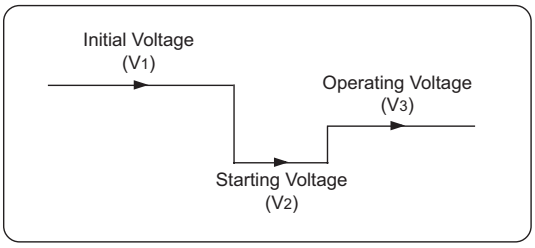

(1) Indoor and Outdoor Fan
Check that the indoor fan and outdoor fan rotate correctly and the airflow is smooth.

(2) Power Supply Voltage
Check the power supply.
If the power supply is abnormal, contact the electric power company.
Usually, voltage drop will occur when starting the operation as shown in the figure (V_2).
In order to protect the device, comply with the following normal range of the power supply voltage.

<Normal Range of Power Supply Voltage>
- Supply Voltage: Rated Voltage $\leq \pm 10\%$
- Starting Voltage (V_2): Rated Voltage $\geq$ -15%
- Operating Voltage (V_3): Rated Voltage $\leq \pm 10\%$
- Voltage Imbalance between Phase: $\leq$ 3%

(3) Normal Operating Pressure
Normal operating suction pressure is 29 to 159.5 psi (0.2 to 1.1 MPa) and normal operating discharge pressure is 145 to 507.6 psi (1.0 to 3.5 MPa) when the refrigerant charge quantity is correct. Check the operation pressure in the test run mode.

(4) High Pressure Switch
Check the operation pressure of the high pressure switch in the table below.

Refrigerant	Operation Pressure
R410A	601 psi (4.15MPa)

(5) High Pressure Increase Retry (Protection Control)

(a) High pressure will increase when one of the following procedures is performed.

Cover the air inlet of outdoor unit during cooling operation.	Cover the air inlet of indoor unit during heating operation.
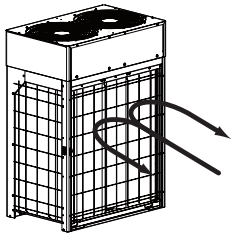	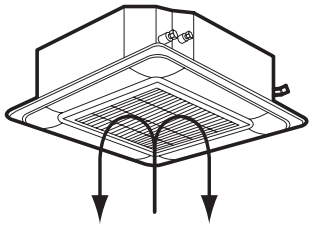

(b) When the high pressure retry control is activated, alarm code “ P 13 ” will be indicated on the 7-segment display of the outdoor unit PCB. If the high pressure retry control occurs three times or more within 30 minutes, alarm code “45” will be indicated on the LCD of the wired controller or the 7-segment display of the outdoor unit PCB.

< For CIW01 >

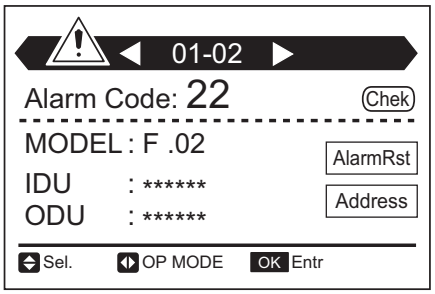

NOTE:
High pressure may not increase until the high pressure switch is activated because of the temperature condition.

3.4.4 Check List for Refrigerant System

Refer to the Service Manual for Outdoor Unit.

3.4.5 Reset for Accumulated Operation Time of Compressor 1-2 (cUJ1- cUJ2)

Refer to the Service Manual for Outdoor Unit.

4. Maintenance

4.1 Maintenance of Outdoor Unit

Refer to the Service Manual for Outdoor Unit.

4.2 Maintenance of Indoor Unit

⚠ DANGER

Use the specified non-flammable refrigerant (R410A) to the outdoor unit in the refrigerant cycle. Do not charge the unit with materials other than R410A, such as hydrocarbon refrigerants (propane, etc.), oxygen, flammable gases (acetylene, or etc.) or poisonous gases when installing, maintaining and moving the unit. Contamination of these are extremely dangerous and may cause an explosion, a fire, and an injury.

⚠ WARNING

TURN OFF all POWER supply switches.

4.2.1 Removing Air Filter and Air Inlet Grille

(1) The air filter is attached to the inside of the air inlet grille. While sliding the knobs on both sides of the air inlet grille in the arrow directions, open the air inlet grille.

(2) Push the air filter toward the arrow direction to remove from filter catches. Remove air filter from the air inlet grille.

(3) Open the air inlet grille at an approximately 45° angle from the decorative panel surface. Tilting the air inlet grille, lift it up and pull it forward.

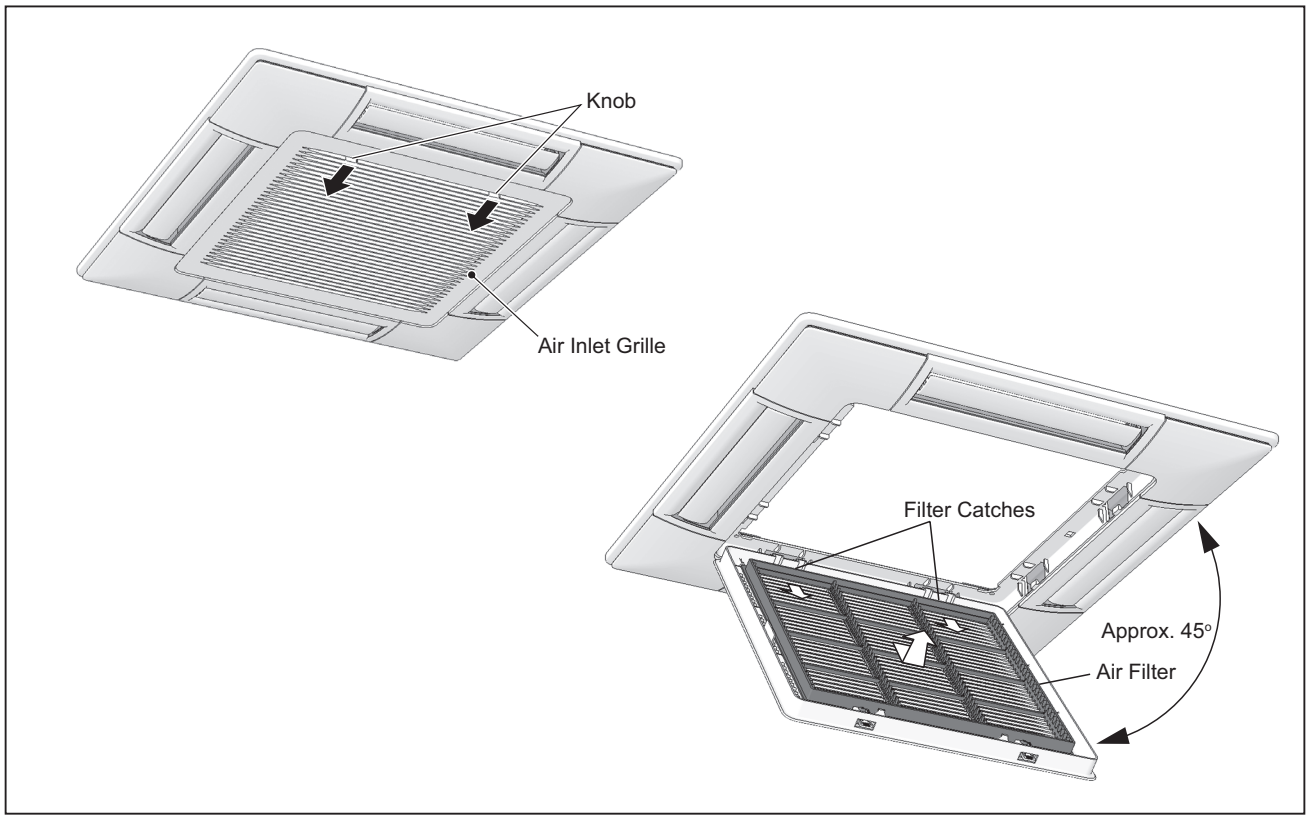

NOTE:
If for some reason the angle of the louvers is changed during air filter replacement/cleaning, adjust the louver angle in auto swing mode.

⚠ WARNING

TURN OFF all POWER supply switches.

⚠ CAUTION

Take care not to drop the electrical box cover.

4.2.2 Removing Electrical Box Cover

(1) The electrical box appears when opening the air inlet grille. Loosen 2 fixing screws for the electrical box cover and open the electrical box.

Tool	Phillips Screwdriver

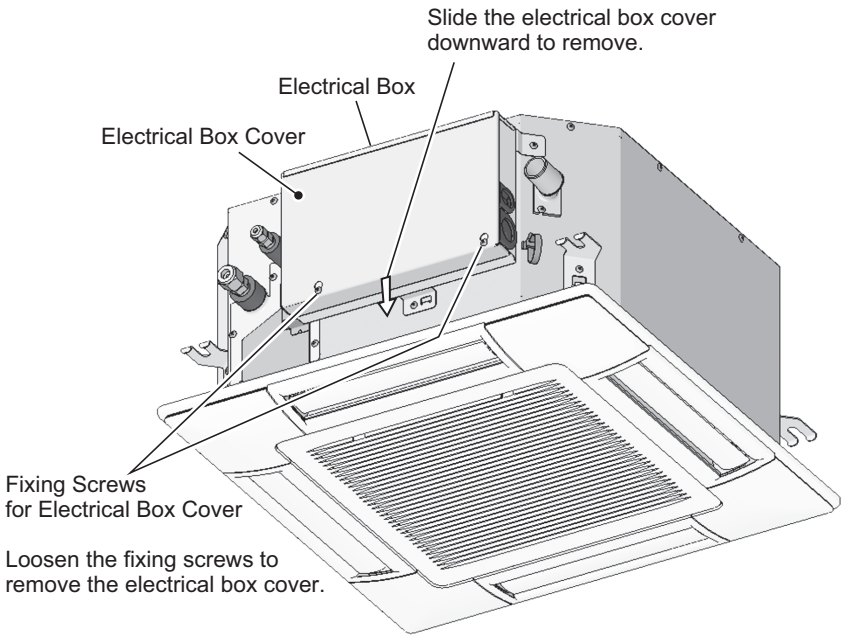

NOTE:

The electrical box is placed on the outside of the unit so that the air inlet grill does not need to be opened. Open the grid ceiling or access door to remove electrical box cover.

⚠WARNING

TURN OFF all POWER supply switches.

4.2.3 Removing Optional Decorative Panel

(1) Remove the auto swing motor connector (CN17) from PCB.

(2) Remove the corner pocket covers.

The corner pocket covers can be removed pulling "A" part toward the arrow direction in the figure below.

Tool	Phillips Screwdriver

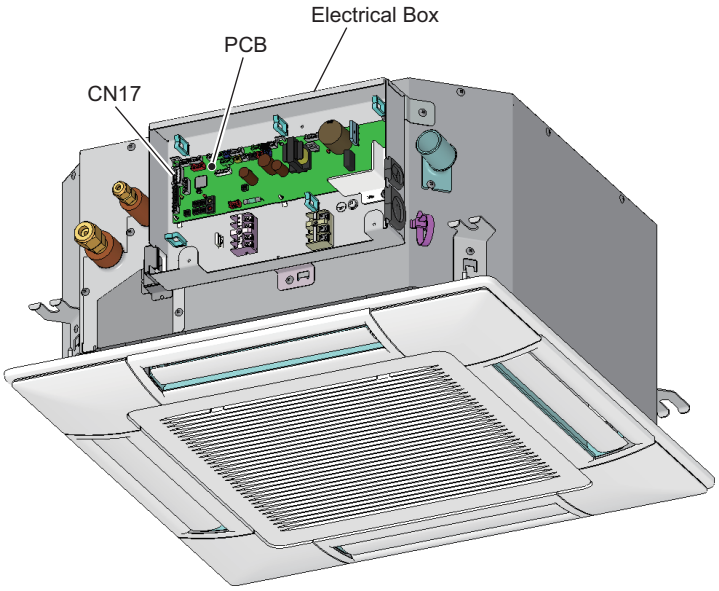

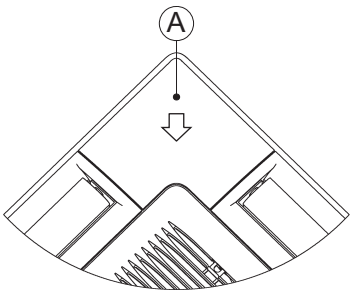

⚠ WARNING

TURN OFF all POWER supply switches.

(3) Remove the long screws of A at the decorative panel. Loosen the long screws of B and rotate the decorative panel according to the arrow direction to remove the decorative panel.

Tool	Phillips Screwdriver

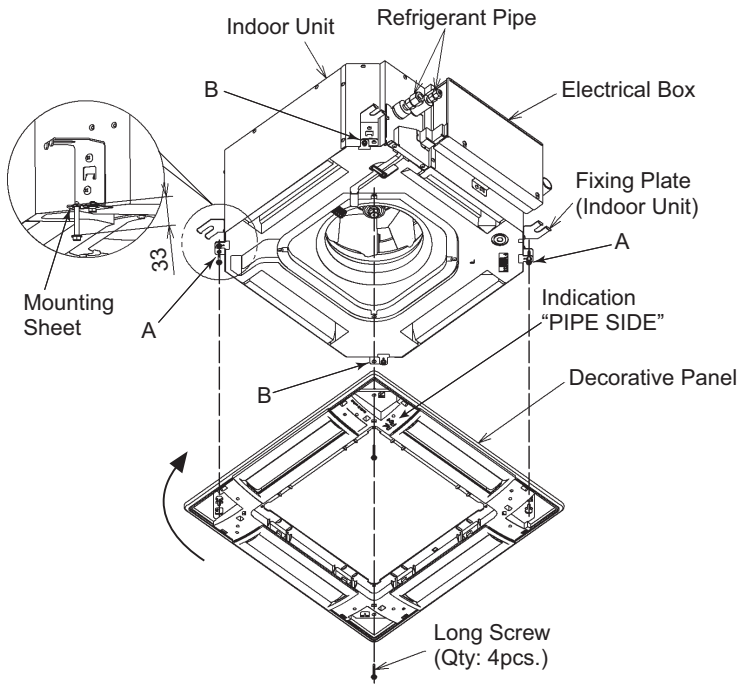

⚠ WARNING

TURN OFF all POWER supply switches.

4.2.4 Removing Turbo Fan and Fan Motor

(1) Remove the air inlet grille according to Section 4.2.1 “Removing Air Filter and Air Inlet Grille.”

(2) Removing Bell-mouth

Remove 4 fixing screws for the bell-mouth fixed to the condensate pan, and remove the bell-mouth.

(3) Removing the Fan Guide

Remove the 8 fixing screws for the fan guide and remove the fan guide.

(4) Removing Turbo Fan and Fan Motor

(a) Remove the nut fixing the fan runner.
(b) Remove 3 nuts fixing the fan motor.
(c) Then remove the fan motor.

Tool	Phillips Screwdriver, Adjustable Wrench

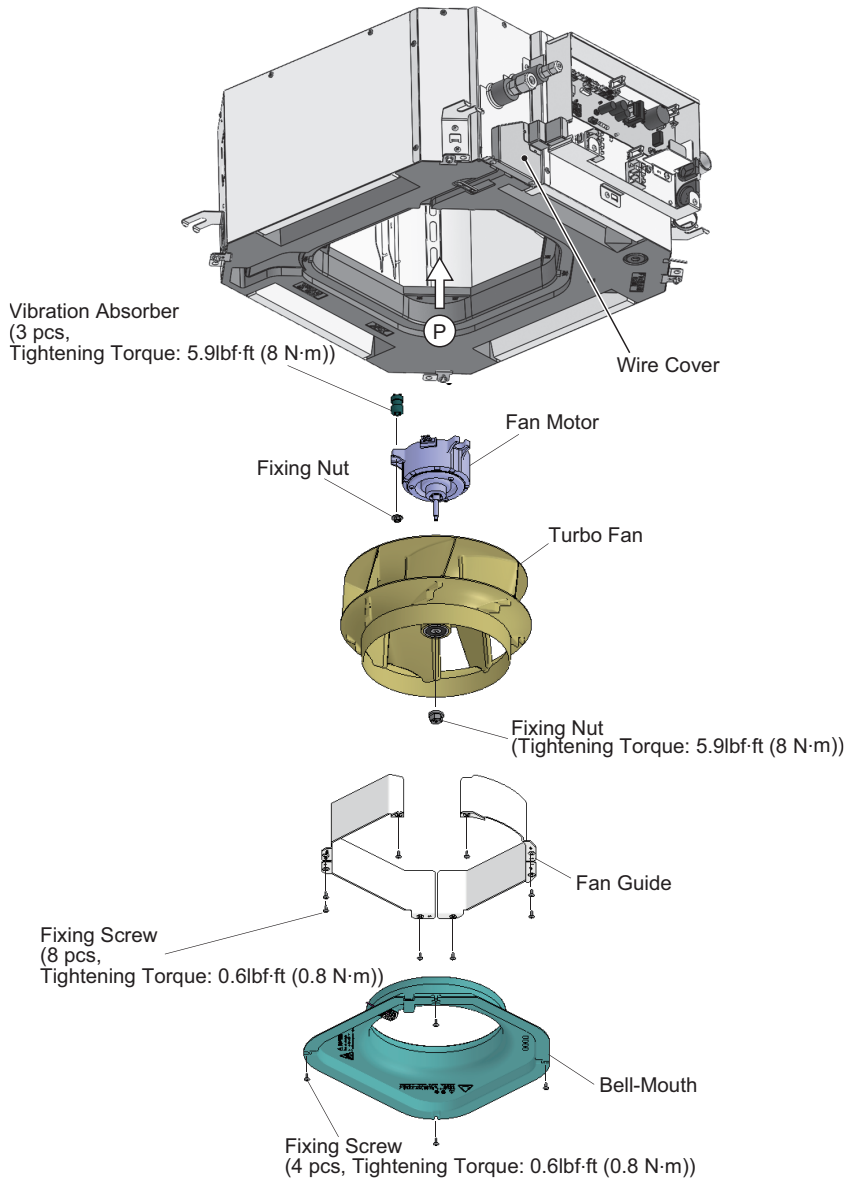

NOTE:

When reassembling each part, verify specifying torque as shown in the figure.

⚠ WARNING

TURN OFF all POWER supply switches.

4.2.5 Removing Printed Circuit Board

(1) Remove the electrical box cover according to Section 4.2.2 “Removing Electrical Box Cover.”
(2) Disconnect all wire connectors from the indoor unit PCB.
(3) Remove the screw for earth wire.
(4) Remove the screw then remove the PCB cover.
(5) The indoor unit PCB is fixed by 6 holders. Pull out PCB from each holder as shown in the figure.

Tool	Phillips Screwdriver, Long-nose Plier

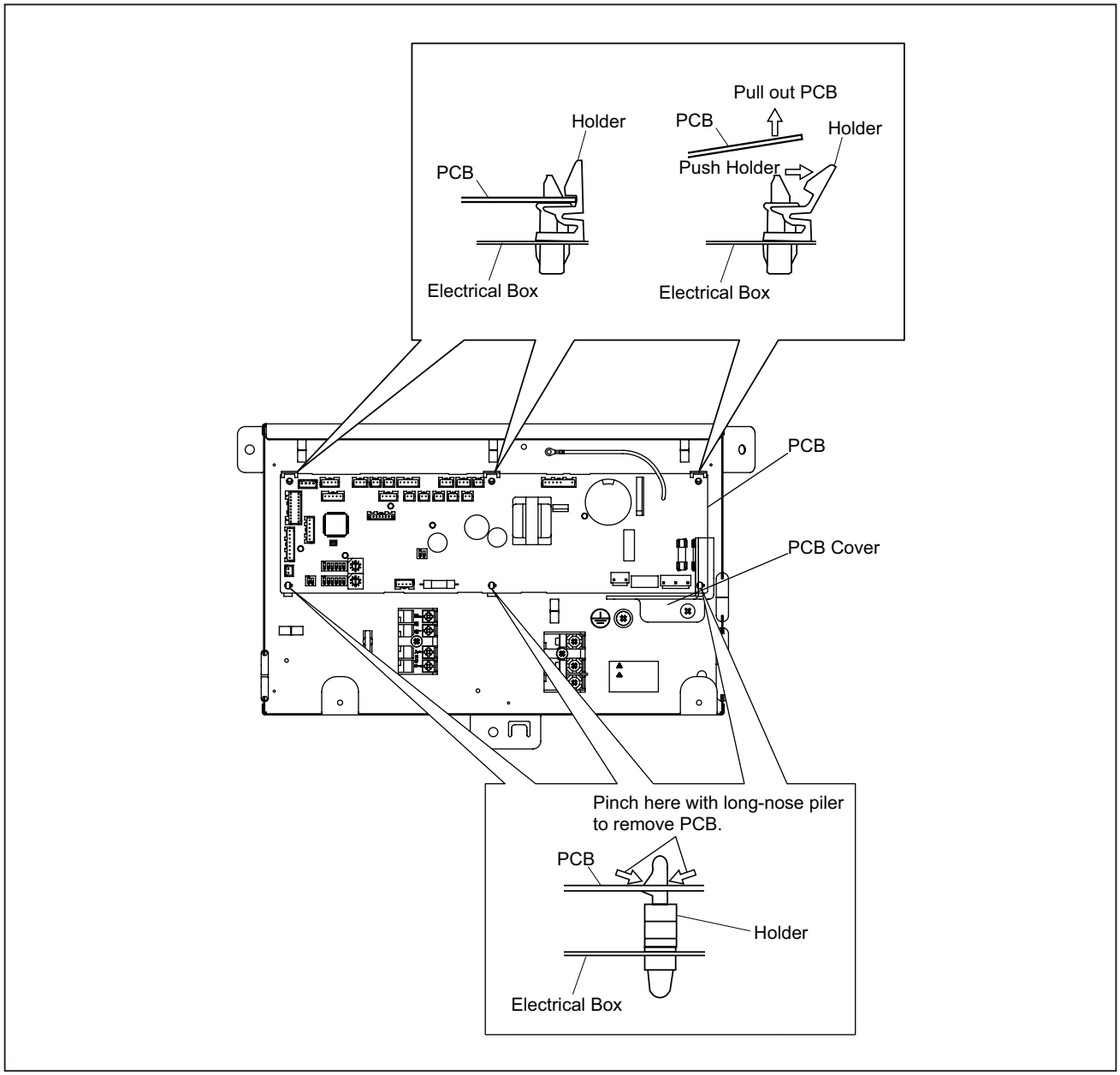

NOTES:
1. Do not touch electrical components on the indoor unit PCB.
2. Do not to apply an excessive force to the indoor unit PCB nor bend it. Otherwise, it may cause failure of the indoor unit PCB.
3. When attaching the indoor unit PCB, make sure that the connectors are connected correctly. If not, the indoor unit PCB may be damaged. In addition, securely attach the screws for each wire.

⚠ WARNING

TURN OFF all POWER supply switches.

4.2.6 Removing Condensate Pan

(1) Remove the decorative panel according to Section 4.2.3 “Removing Optional Decorative Panel.”

(2) Remove the screw then remove the wire cover.

(3) Remove the electrical box cover according to Section 4.2.2 “Removing Electrical Box Cover.” Disconnect the connectors of the gas pipe thermistor, the liquid pipe thermistor, the expansion valve and the fan motor.

(4) Remove the bell-mouth according to Section 4.2.4 “Removing Turbo Fan and Fan Motor.”

(5) Draining Water

(a) Pull out the rubber plug from the condensate pan, and drain the water remaining in the condensate pan.
Although silicon sealant is applied over the rubber plug, the rubber plug can be removed by pulling the bottom side.
NOTE:
1. Do not damage the rubber plug with a cutter.
2. Do not damage or remove the insulation attached to the bottom side of the rubber plug when removing/attaching it

(b) Check any clogging in the drain hole.

(6) Removing Condensate Pan

(a) Remove 4 screws fixing the condensate pan to the unit.

(b) Then lift the condensate pan down to remove it from the unit.

Tool	Phillips Screwdriver, Bucket (with an approx. 5 liter capacity)

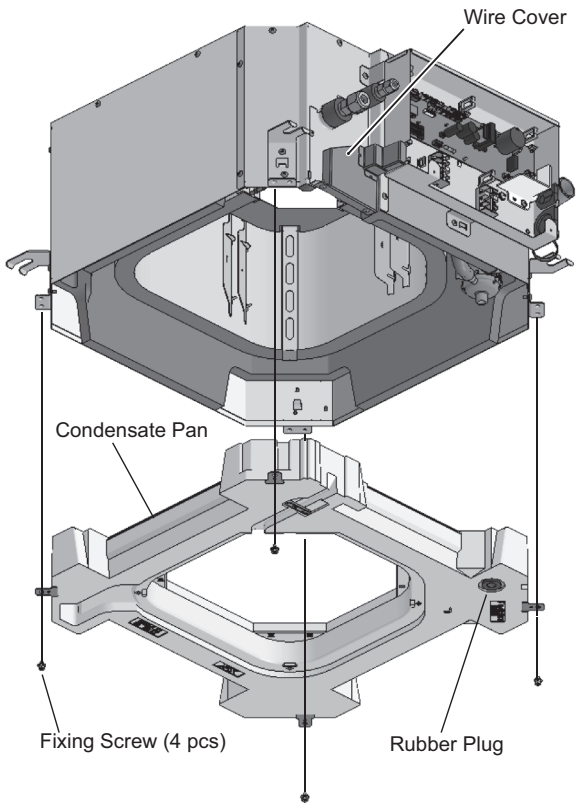

NOTE:
When attaching the rubber plug again, do not put it in with a phillips screwdriver, etc. A clearance of 1/16 inch (2mm) is left between the rubber plug and the condensate pan.

⚠WARNING

TURN OFF all POWER supply switches.

4.2.7 Removing Drain-up Mechanism

(1) Remove the condensate pan according to Section 4.2.6 “Removing Condensate Pan.”

(2) Remove the lead wires for the drain-up mechanism, float switch and outlet air thermistor gathered with vinyl tube and clamping band (Do not dispose the vinyl tube).

(3) Cut the plastic band and disconnect the condensate hose from the drain-up mechanism.

(4) Remove the fixing screw for the drain-up mechanism. Make sure to hold the drain-up mechanism by hand so that it will not fall off.

(5) Then remove the drain-up mechanism.

Tool	Phillips Screwdriver

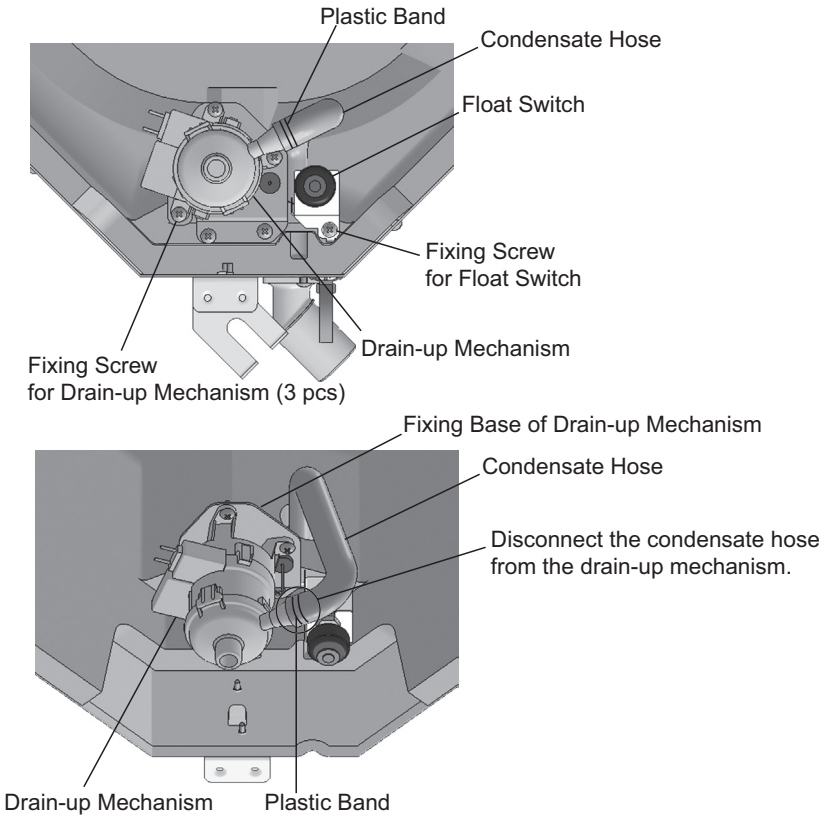

NOTE:

1. When attaching the drain-up mechanism, insert the condensate hose into the condensate pump completely.
2. After attaching the drain-up mechanism, check that the condensate hose does not contact the fixing base of drain-up mechanism. If the condensate hose contacts the fixing base of drain-up mechanism, adjust the position of the condensate hose.
3. For reassembling, wrap up the lead wires for the drain-up mechanism, float switch and outlet air thermistor together with the vinyl tube, seal with filament tape (field supply) then tighten with the clamping. Fix the gathered wires with the plastic band attached to the fixing base of drain-up mechanism.

⚠ WARNING

TURN OFF all POWER supply switches.

4.2.8 Removing Float Switch

(1) Remove the condensate pan according to Section 4.2.6 “Removing Condensate Pan.”

(2) Remove the lead wires for the drain-up mechanism, float switch and outlet air thermistor according to Section 4.2.7 "Removing Drain-up Mechanism"

(3) Removing Float Switch

(a) The float switch is attached to the condensate pan. Remove the fixing screw and remove the fixing plate for the float switch from the condensate pan.

(b) Loosen the resin nut for the float switch and remove the float switch from the fixing plate.

Tool	Phillips Screwdriver, Nipper

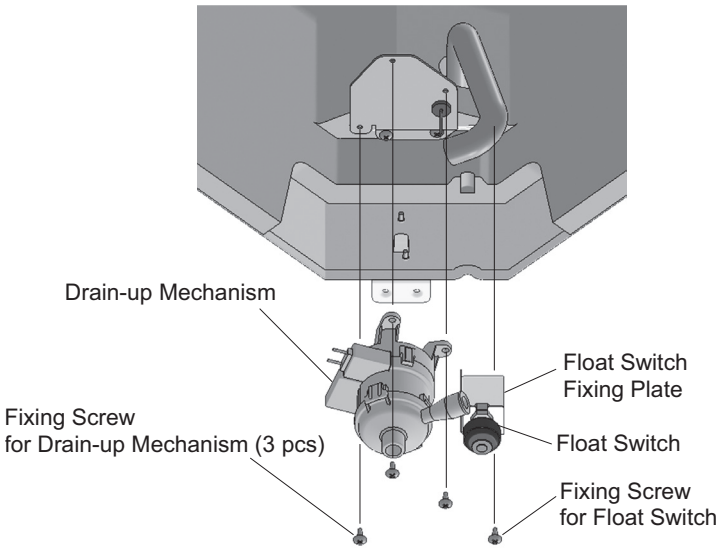

NOTE:

1. When attaching the float switch again, fit the tab of the fixing plate into the slot on the condensate pan. Then tighten the screw.
2. When attaching the float switch again, tighten the resin nut with a tightening torque of 0.2 to 0.3 lbf·ft (0.3 to 0.4 N·m). If the tightening torque is too high, the resin nut might be damaged.

⚠ WARNING

TURN OFF all POWER supply switches.

4.2.9 Removing Outlet Air Thermistor

(1) Remove the condensate pan according to Section 4.2.6 “Removing Condensate Pan.”

(2) Remove the lead wires for the drain-up mechanism, float switch and outlet air thermistor according to Section 4.2.7 "Removing Drain-up Mechanism"

(3) Removing the rubber plug then remove the outlet air thermistor from fixing base of drain-up mechanism.

Tool	Phillips Screwdriver, Nipper

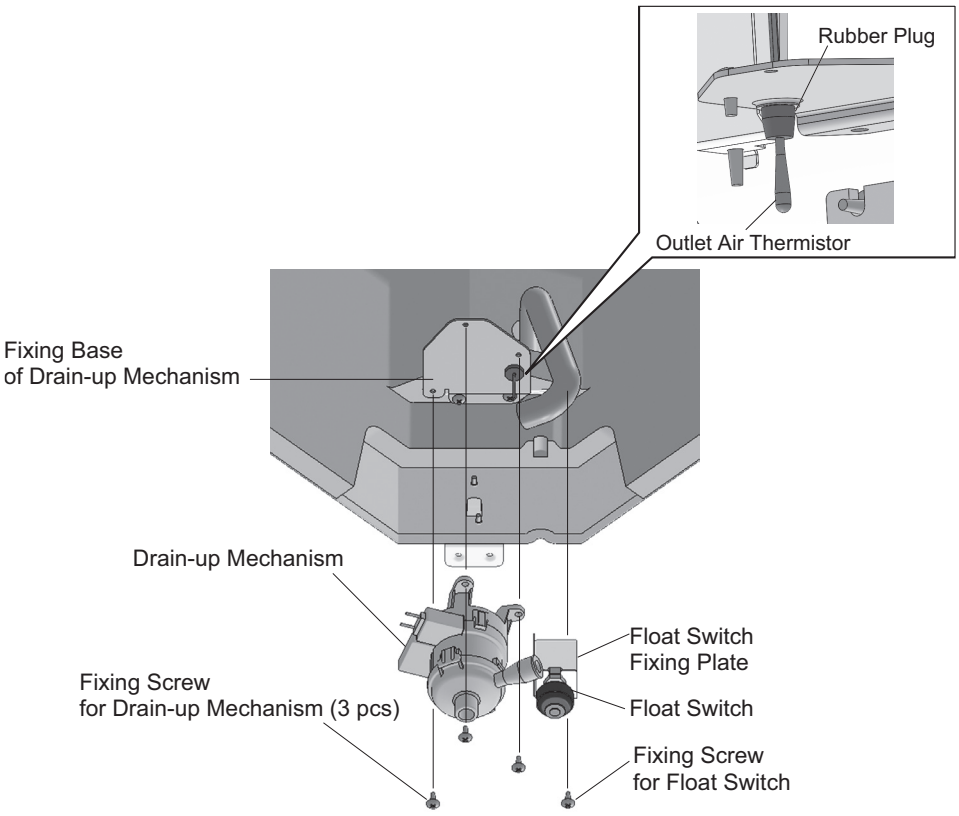

⚠ WARNING

TURN OFF all POWER supply switches.

4.2.10 Removing Liquid Pipe Thermistor, Gas Pipe Thermistor and Expansion Valve Coil

(1) Remove the decorative panel according to Section 4.2.3 “Removing Optional Decorative Panel.”

(2) Remove the bell-mouth and the fan runner according to Section 4.2.4 “Removing Turbo Fan and Fan Motor.”

(3) Remove the condensate pan according to Section 4.2.6 “Removing Condensate Pan.”

(4) Remove 5 screws for the partition plate fixing the heat exchanger.

(5) Removing Thermistors

(a) Remove butyl sheet attached to each thermistor.

(b) Remove each thermistor for the gas pipe and the liquid pipe.

NOTE:

Each thermistor is fixed with a thermistor holder.

(6) Removing Expansion Valve

(a) Remove butyl sheet attached to the expansion valve.

(b) Loosen the locknut using a wrench by turning it counterclockwise viewed from the expansion valve coil.

NOTE:

Remove the expansion valve coil with no pressure applied to it. Otherwise, the pressure would cause the bellows to pop up. Do not touch the bottom side of the drive part of the expansion valve coil when using a wrench. Otherwise, the bottom side of the drive part of the expansion valve coil starts to race and might be damaged.

(7) Turn the locknut to remove the drive part from the expansion valve.

Tool	Phillips Screwdriver

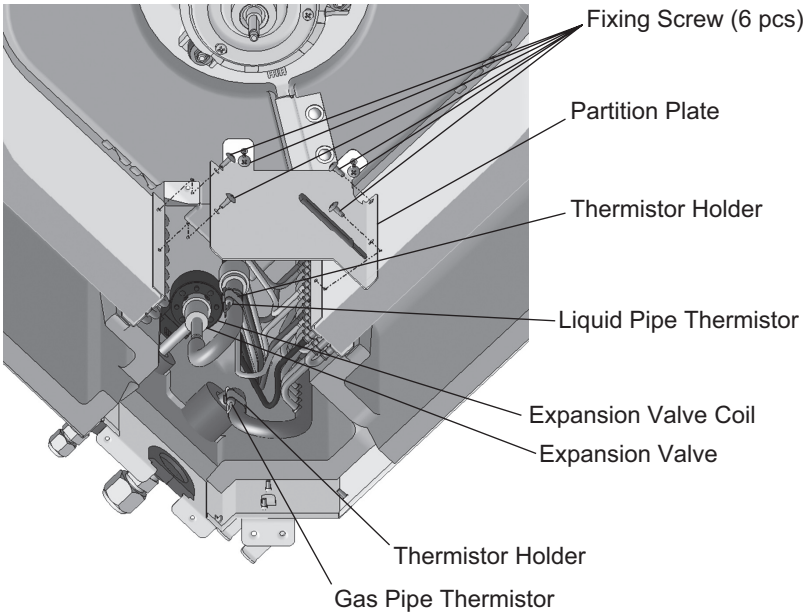

⚠ WARNING

TURN OFF all POWER supply switches.

(8) Prepare a replacement drive part for the expansion valve coil. To make sure that the driver position has been adjusted, use a drive part specified as a service part.

NOTE:

1. Be careful that dust and foreign matter will not enter the connection portion during replacement. The connection portion exposed due to replacement is the core of the expansion valve mechanism.
2. Do not damage the connection portion with tools, etc.

(9) Attach the replacement drive part to the expansion valve and align their shafts. Then attach the locknut to the expansion valve.

(10) Tighten the locknut to some degree by hand and then completely with the wrench. The tightening torque shall be 8.9 to 11.1 lbf·ft (12 to 15N·m).

NOTE:

Do not apply an excessive force to the expansion valve coil. The expansion valve coil is attached with its eccentricity facing the opposite side of the pipe joint. The direction does not affect the valve's opening/closing action. Even if the position of the expansion valve coil is slightly misaligned after replacement, no adjustment with tools will be needed.

NOTE:

1. After replacement, attach the gas pipe thermistor and the liquid pipe thermistor and the expansion valve coil in the reverse procedure. Attach butyl sheet to make sure that there is no clearance between the thermistors and butyl sheets.
2. After replacement, check that the wires do not contact the runner.

WARNING

TURN OFF all POWER supply switches.

4.2.11 Removing Inlet Air Thermistor

(1) Remove the inlet air thermistor connector (THM1) from fixing base.

(2) Remove the bell-mouth according to Section 4.2.4 "Removing Turbo Fan and Fan Motor".

(3) Tear off the filament tape then remove the thermistor cable attached to the bell-mouth.

(4) Push the thermistor case cover to the direction shown in the picture below to remove the inlet air thermistor with the thermistor case cover.

Tool	Phillips Screwdriver

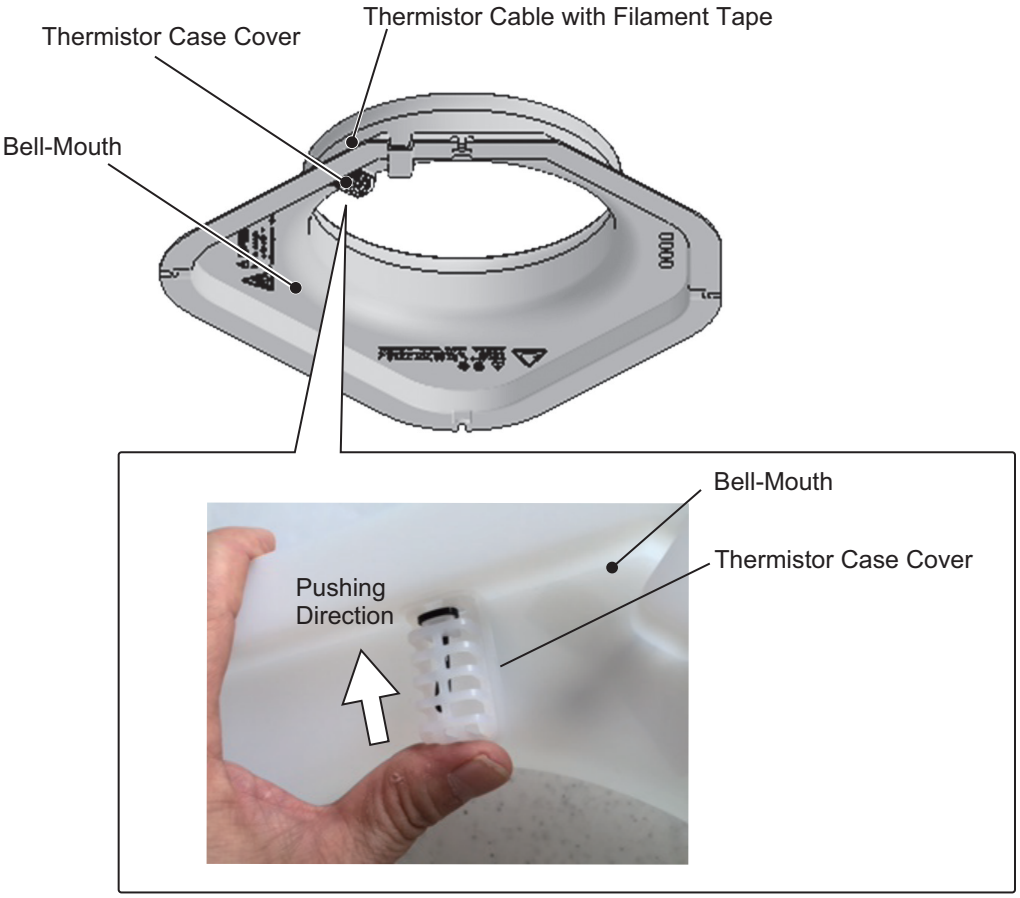

⚠ WARNING

TURN OFF all POWER supply switches.

4.2.12 Removing Auto Louver Motors and Louver

(1) Remove the decorative panel according to Section 4.2.3 “Removing Optional Decorative Panel.”

(2) Remove the fixing screw for C-cover and remove the C-cover.

(3) Remove the fixing screw for AS Motor from the decorative panel. Then remove the louver, louver bearing and AS motor.

(4) Remove the AS motor, stopper and bearing from the louver.

(5) Disconnect the connector for the AS motor. Press the catch to disconnect the connector to avoid breakage.

Tool	Phillips Screwdriver

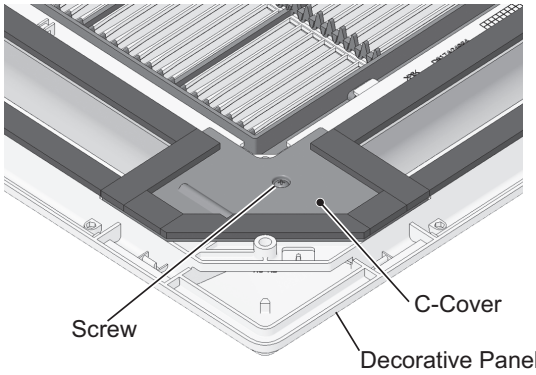

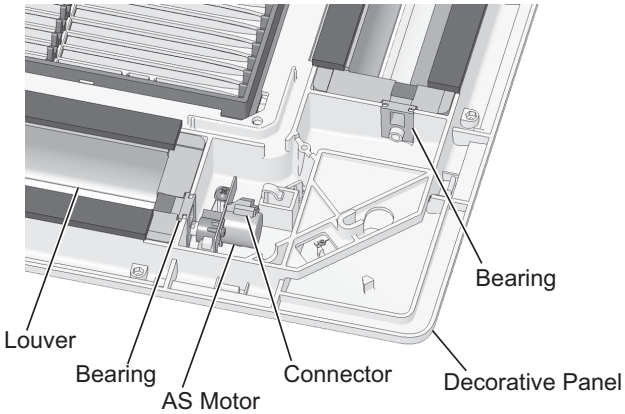

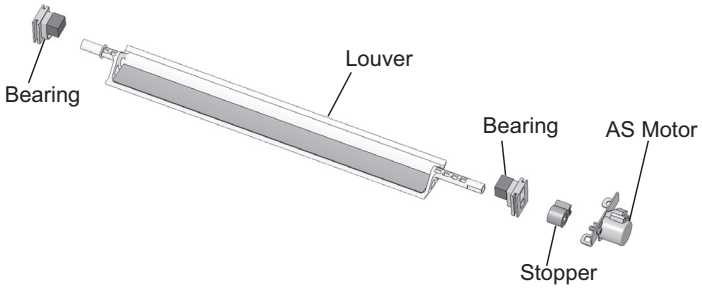

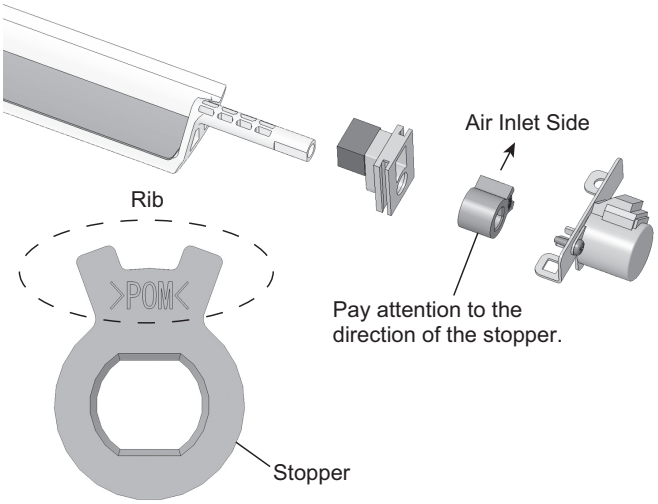

4.3 Cleaning Indoor Unit Heat Exchanger

4.3.1 Required Tools for Cleaning (Field Supplied)

No.	Remark	No.	Tool	Remark
1	Cleaning Water Pump A water pump equipped with a tank is recommended. 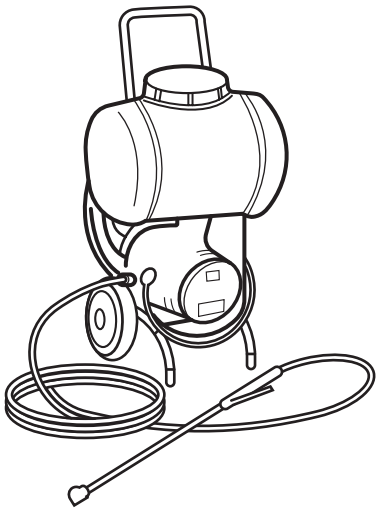	2	Water Tank Clean Water	Approx. 18 liters
		3	Nozzle	Attached with Water Pump
		4	Brush (non-metal) 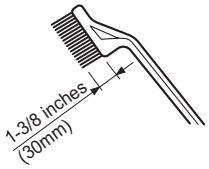	If the heat exchanger is heavily clogged with dust, remove it with this brush. The length of brush should be 1 to 1-3/8 inches (25 to 35mm).
		5	Hose for Condensate Pan	Select a hose according to site requirements.
		6	Bucket	Approx. 5 liters (Qty: 2)
		7	Phillips Screwdriver	Qty: 1
		8	Pliers	Qty: 1
		9	Adjustable Wrench	Qty: 1
		10	Megohm Tester	500V
		11	Cleaning Agent	Select a neutral type cleaning agent.
		12	Spray	To spray cleaning water.
		13	Adhesive Tape	To tape the vinyl sheet to protect the room from cleaning water.
		14	Rope	3ft 7in. (1m), four pieces
		15	Vinyl Sheet	Select a vinyl sheet with 1/6 inch (0.5mm) thickness.
		16	Gloves	
17	Cleaning Water Collector or Equivalent Unit: inch (mm) Example: 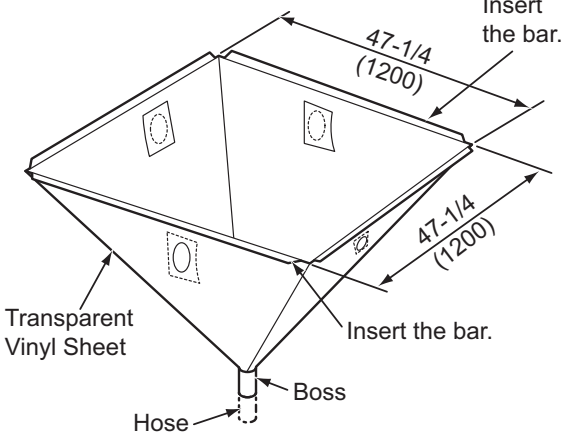 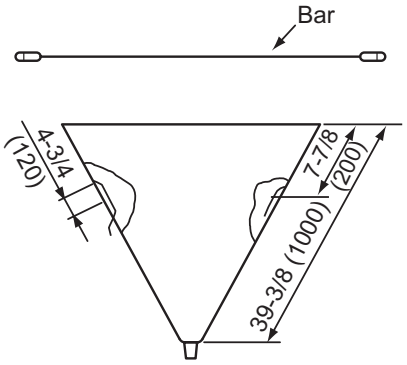 Inner Side of ϕ4-3/4 (ϕ120) hole should be covered with felt sheet to insert the spray nozzle.			

⚠ WARNING

TURN OFF all POWER supply switches.

4.3.2 Cleaning Procedure

Spread a vinyl sheet over the floor to protect furniture, etc. from cleaning water before this work.

No.	Procedure	Tool
1	Remove the optional decorative panel according to Section 4.2.3 "Removing Optional Decorative Panel."	Phillips Screwdriver
2	Remove the electrical box after opening the electrical box cover and disconnecting the connectors between the indoor and outdoor units and other connectors according to Section 4.2.2 "Removing Electrical Box Cover."	Phillips Screwdriver
3	Remove the bell-mouth and fan according to Section 4.2.4 "Removing Turbo Fan and Fan Motor."	Phillips Screwdriver Adjustable Wrench
4	Remove the condensate pan according to Section 4.2.6 "Removing Condensate Pan."	Phillips Screwdriver
5	Remove the float switch according to Section 4.2.9 "Removing Float Switch."	Phillips Screwdriver
6	Remove the drain-up mechanism according to Section 4.2.8 "Removing Drain-up Mechanism."	Phillips Screwdriver

NOTES:

Remove the condensate pan after removing drain water in the condensate pan.

1. Remove the drain water in the condensate pan after pulling out the rubber plug.
2. Insert the rubber plug into the hole after checking the above.
3. Remove the condensate pan after removing four securing screws. Remove the condensate pan carefully, since the drain water may remain at the bottom of the condensate pan.
4. Clean and dry the condensate pan after removing it. Handle the condensate pan carefully so as not to damage it.

⚠ WARNING

TURN OFF all POWER supply switches.

(1) Scratch off the dust on the inner surface of the heat exchanger downwards using a brush. Collect all dust in a bucket or box.

Tool	Brush, Bucket (or Box)

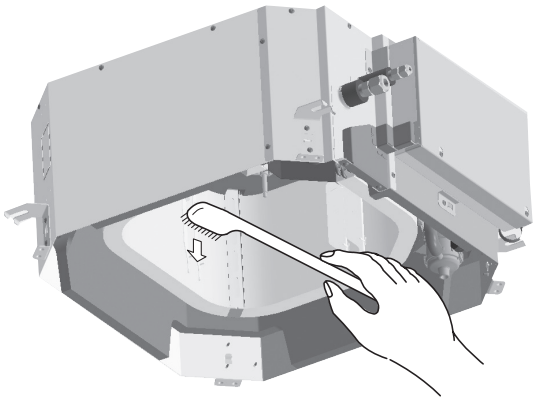

(2) Attach a vinyl sheet around the heat exchanger by using adhesive tapes so that cleaning water will not be splashed over the insulation surface and drain-up pump. Seal the gap between vinyl sheets by using adhesive tapes.

(3) Attach ropes to each suspension bracket.

(4) Insert the bars through the holes of the cleaning water collector as shown in Section 4.3.1.

(5) Attach the ropes to the four bars of the cleaning water collector and suspend the cleaning water collector as shown in the figure.

(6) Connect the hose to the boss and put the end of the hose in a bucket.

Tool	Knife, Bucket

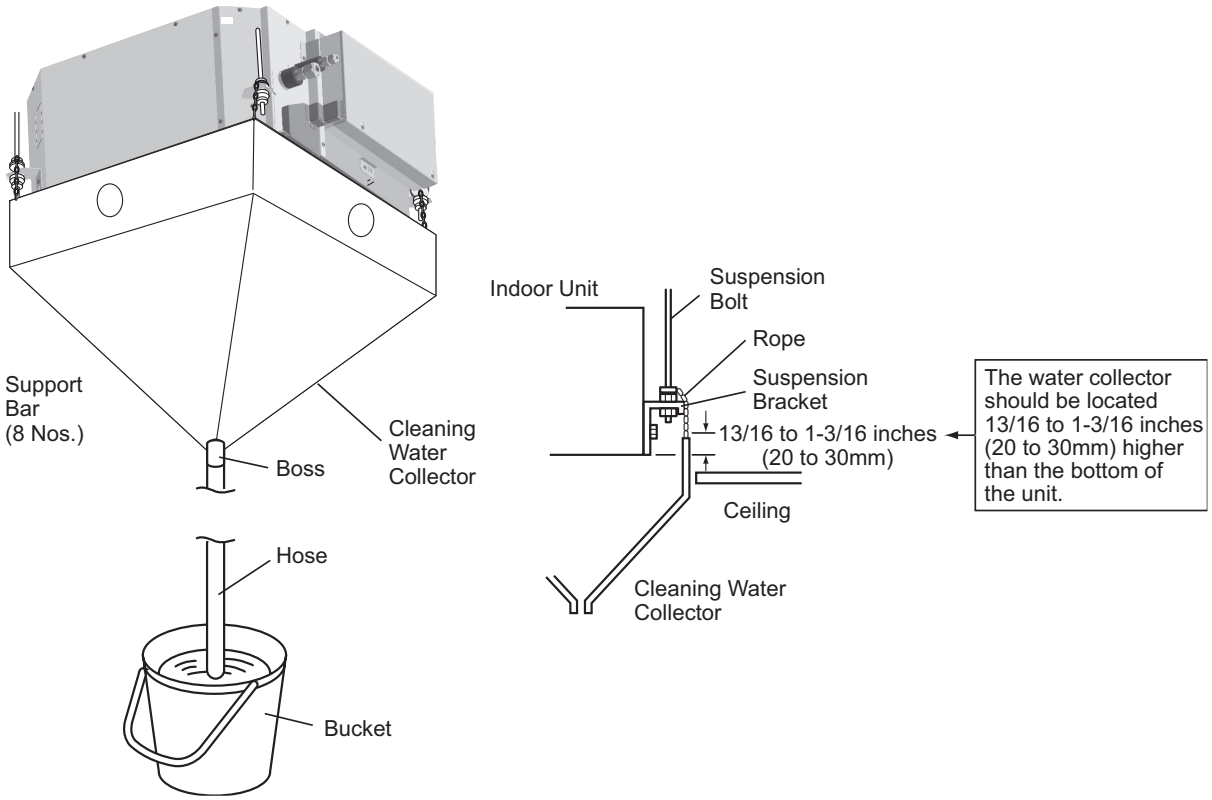

⚠ WARNING

TURN OFF all POWER supply switches.

(7) Put approximately 15 liters of cleaning agent for aluminum fins in the supply tank.

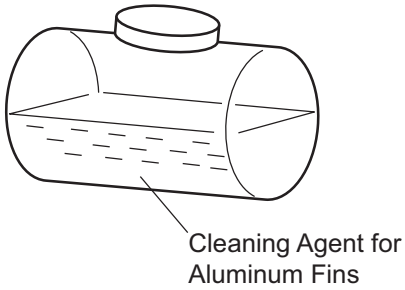

(8) Insert the spray nozzle into the hole of the cleaning water collector. Operate the water pump and clean the dust on the heat exchanger. After cleaning, spray clean water to remove the cleaning water. Adjust the pressure of the water pump so as not to damage the fins.

Tool	Clean Water, Cleaning Agent, Water Pump, Cleaning Spray

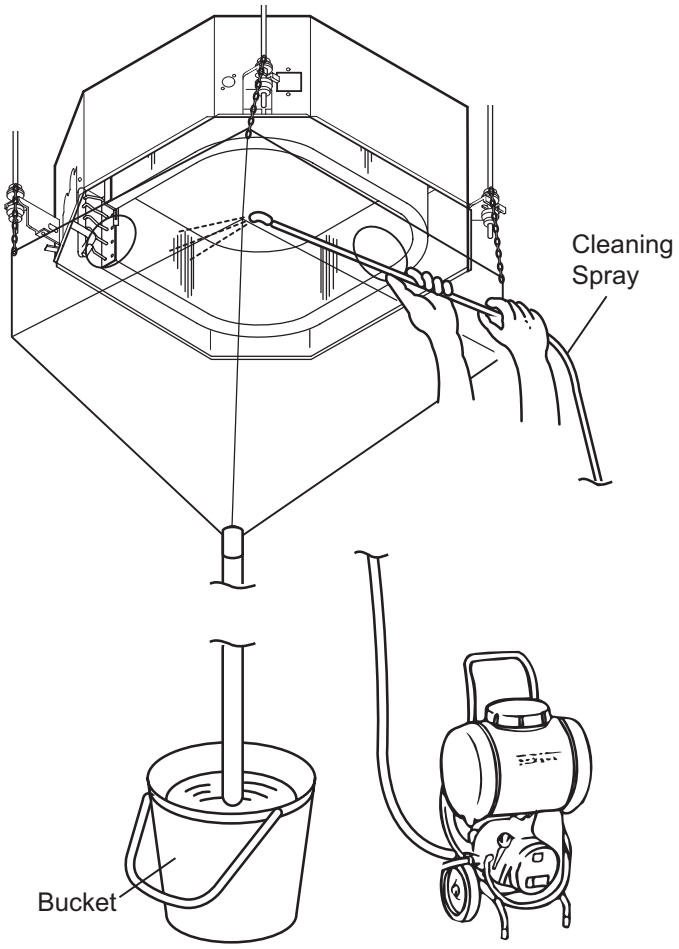

NOTES:
1. If any cleaning water remains, fins will become corroded.
2. Adjust the pressure of the pump at 36 to 71 psi (2.5 to 5.0 kg/cm^2) so as not to damage the fins.

⚠ WARNING

TURN OFF all POWER supply switches.

(9) After cleaning, mount the condensate pan by extending the rope downwards.

NOTE:
When the cleaning water collector is removed, wipe off the drops from the indoor unit.

Tool	Phillips Screwdriver

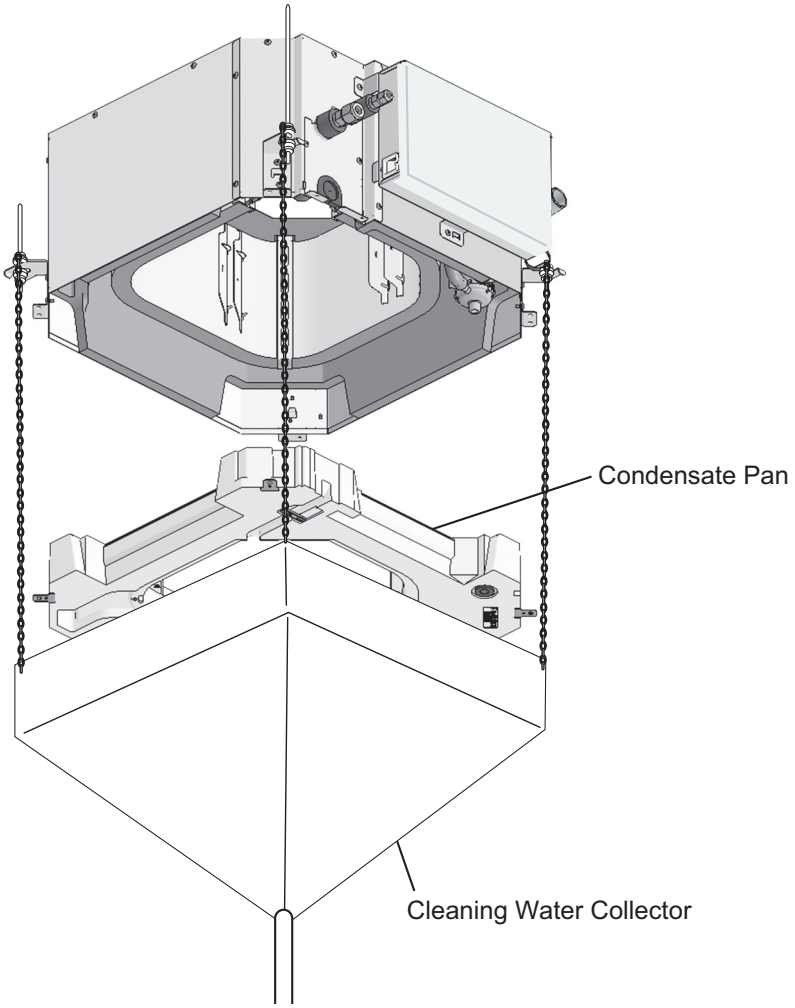

(10) Check the insulation of the condensate pump with a megohm-meter. Check to ensure that the insulation is greater than 1 MΩ when 500V is applied.

(11) Connect wiring as it was.

(12) Neutralization Treatment after Cleaning
The cleaning agent specified in Section 4.3.1 is of the neutral type. However, the cleaning water after use should not be neutral. Collect all cleaning water and provide necessary neutralization treatment for the cleaning water.

4.4 Main Parts

4.4.1 for Outdoor Unit

Refer to the Service Manual for Outdoor Unit.

4.4.2 for Change-Over Box

Refer to the Service Manual for Outdoor Unit.

4.4.3 for Indoor Units

4.4.3.1 Printed Circuit Board

● Mini Cassette

Arrangement of Connectors and Check Points for PCB1 (PI143)

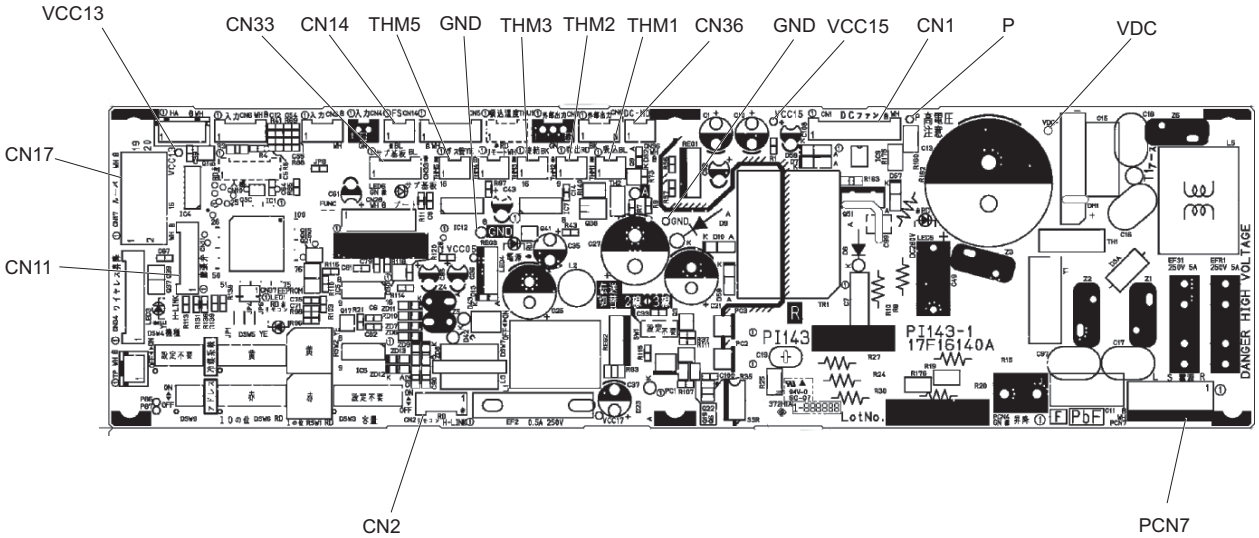

4.4.3.2 Fan Motor

● Mini Cassette

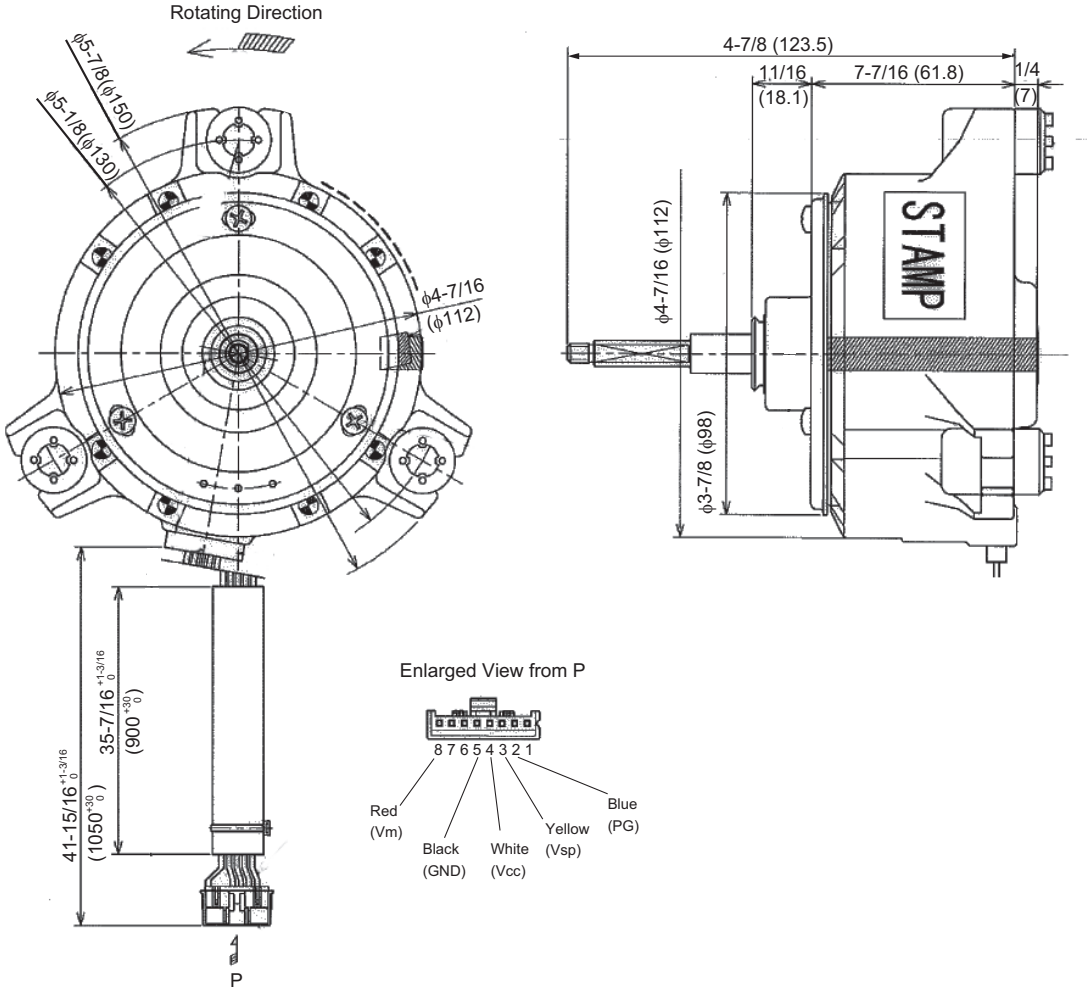

(Main Parts)

4.4.3.3 Thermistor

(1) Position of Thermistor

● Mini Cassette

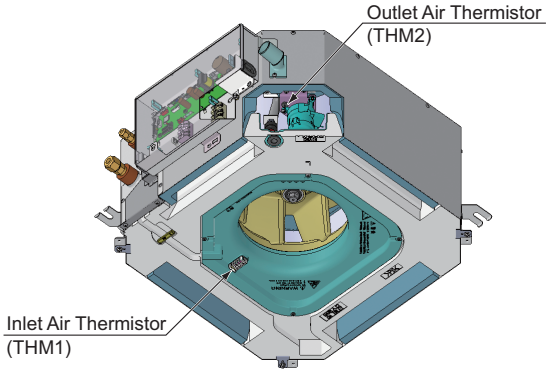

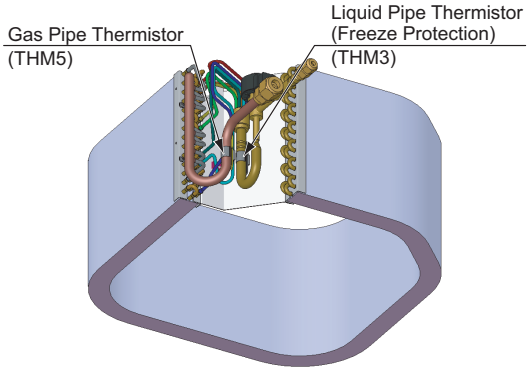

(2) Thermistor for Indoor Suction Air Temperature (For Room Temperature Control)

The room temperature is controlled by the thermistor for indoor suction air temperature detecting the temperature at the suction air inlet of the indoor unit.
The setting temperature is indicated on the L.C.D. of the wired controller switch by number.
Adjust the setting temperature for prevention from excessive cooling and heating.
It is recommended to set the temperature as follows;
Economical Cooling Operation: 81°F (27°C) to 84°F (29°C) / Economical Heating Operation: 64°F (18°C) to 68°F (20°C)
The resistance characteristics of thermistor is shown in the above figure.

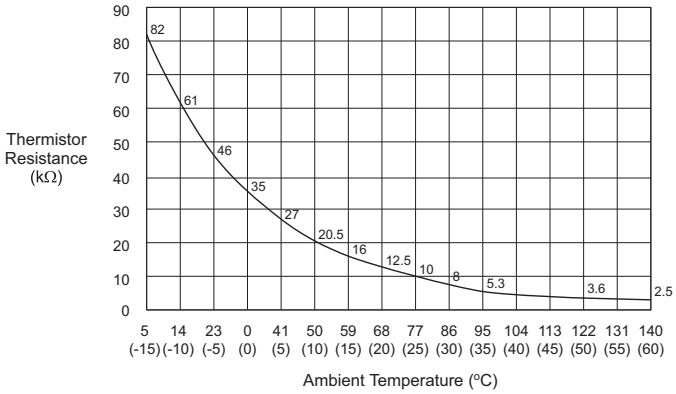

Thermistor Characteristics

ATTENTION:

The thermo-off value of the indoor unit air inlet thermistor is set at the temperature higher than the value indicated on the wired controller switch by 7°F (4°C) and the maximum is 86°F (30°C), because the suction air temperature during heating operation has a tendency to become higher than that of the occupied zone, intending comfortable heating operation.

(3) Thermistor for Indoor Discharge Air Temperature (For Discharge Air Temperature Control)

The thermistor for indoor discharge air temperature is utilized for the control of prevention from cold air discharge in heating operation, etc.
The resistance characteristics of thermistor is shown in the above figure.

When the temperature of the heat exchanger is below 32°F (0°C), thermostat is turned OFF automatically and over 57°F (14°C), thermostat is turned ON again.	⇨	Prevention from freezing onto the heat exchanger in COOL and DRY operation.

(4) Thermistor for Liquid Pipe Temperature of Indoor Heat Exchanger
The resistance characteristics of thermistor is shown in the above figure.

When the temperature of the heat exchanger is below 32°F (0°C), thermostat is turned OFF automatically and over 57°F (14°C), thermostat is turned ON again.	⇨	Prevention from freezing onto the heat exchanger in COOL and DRY operation.

(5) Thermistor for Gas Pipe Temperature of Indoor Heat Exchanger
The evaporating temperature in heating operation is detected.
The resistance characteristics of thermistor is shown in the above figure.

4.4.3.4 Electronic Expansion Valve

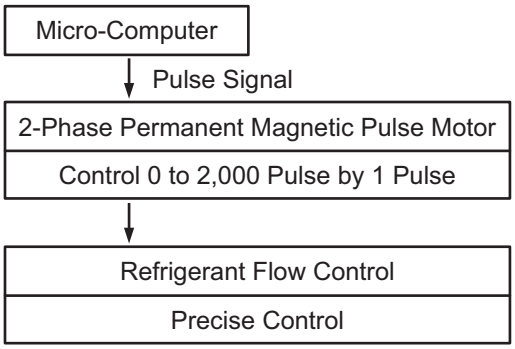

Unit: inch (mm)

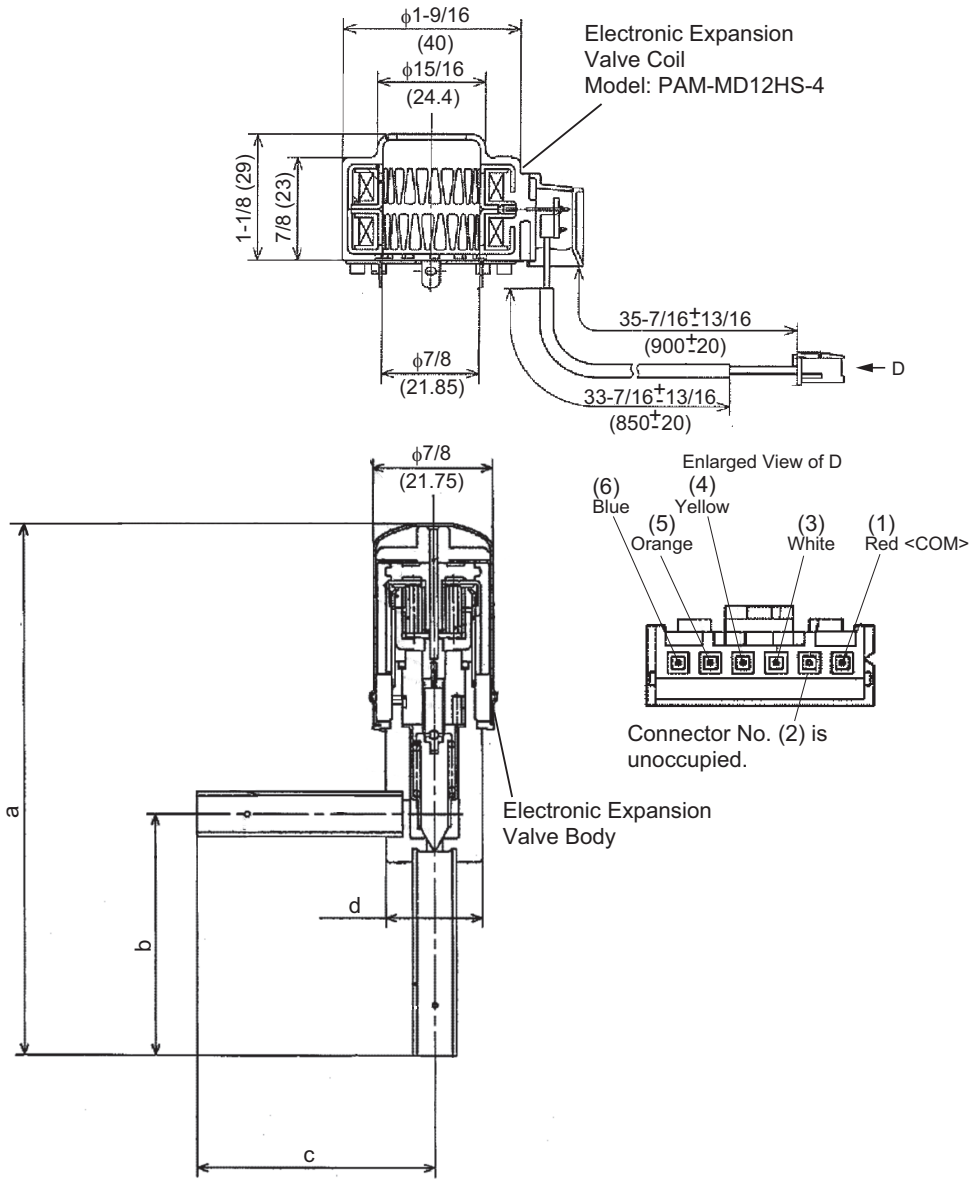

(Main Parts)

Specifications

Items	Specifications
Type	PAM Type
Refrigerant Used	R410A
Working Temperature Range	-22°F to 158°F (-30°C to 70°C)
Mounting Direction	Drive Shaft in Vertical Direction, Motor Upside and 90° in Four Direction
Flow Direction	Reversible
Drive Method	4-Phase Pulse Motor Method
Rated Voltage	DC12V±1.2V
Drive Condition	100~250PPS 2 Phase Excitation
Wiring Diagram, Drive Circuit and Activation Mode	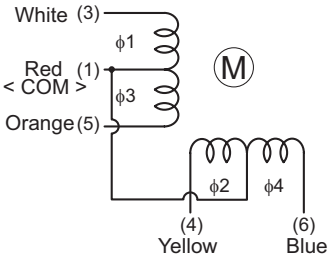 The coil resistance shall be 100±10Ω between each phase. ( ): Connector Nos. 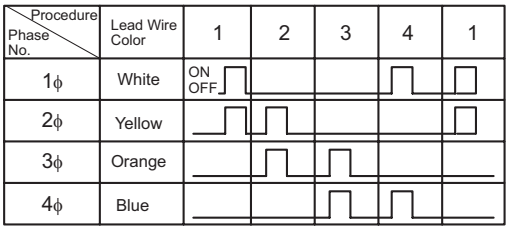 Activation Mode: 1 → 2 → 3 → 4 → 1 ...Close 4 → 3 → 2 → 1 → 4 ...Open

Unit: inch (mm)

Model	Diameter				Valve Body
	a	b	c	d	
(H,Y,C)ICM008B21S (H,Y,C)ICM012B21S (H,Y,C)ICM015B21S	3-3/4 (96)	1-11/16 (43)	1-11/16 (43)	11/16 (17.5)	PAM-B40YGHS-1
(H,Y,C)ICM018B21S	3-7/8 (98)	1-15/16 (49)	1-15/16 (49)	13/16 (20)	PAM-B801YGHS-1

5. External Input/Output and Function Setting

5.1 DIP Switch Settings of Outdoor Unit

Refer to the Service Manual for Outdoor Unit.

5.2 High Static Pressure Setting (DSW5-No.5: ON)

Refer to the Service Manual for Outdoor Unit.

5.3 External Input/Output and Function Setting Mode for Outdoor Unit

Refer to the Service Manual for Outdoor Unit.

5.4 External Input/Output and Function Setting Mode for Indoor Unit

● Setting Method from Wired Controller
The function selection and the input/output setting can be set from the test run menu.

< Normal Mode Display >

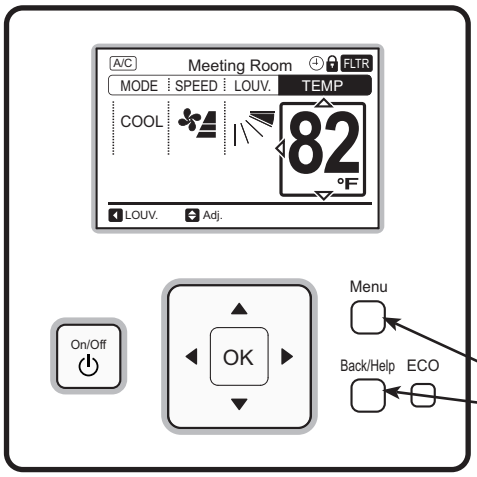

< Test Run Menu Display >

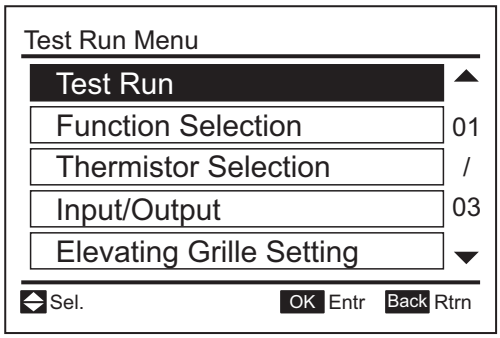

Press and hold “Menu” and “Back/Help” simultaneously for 3 seconds during the normal mode.

● Function Selection and Input/Output Setting

1. Press and hold “Menu” and “Back/Help” simultaneously for at least three seconds during the normal mode (when unit is not operated). The Test Run menu will be displayed.

2. Select “Function Selection” or “Input/Output” from the Test Run menu and press “OK”.

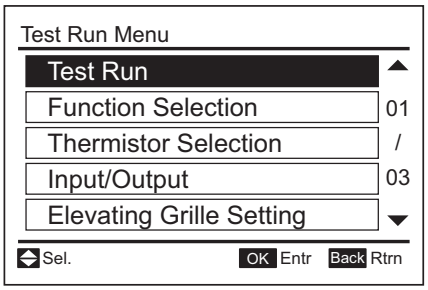

3. Select the indoor unit by pressing “△ ▽ ◁ ▷” and touch “OK”.
(This screen is NOT displayed when the number of an indoor unit connected with the controller is "1". In this case, "4" will be displayed.)

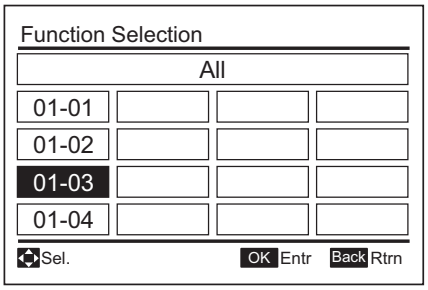

Function Selection

4. Press “△ ▽” and select the item.

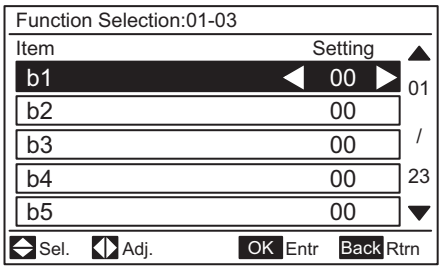

5. Press “◁ ▷” and change the setting.

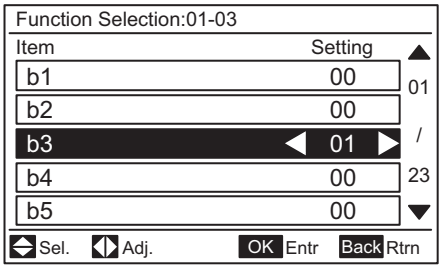

Input/Output Setting

4. Press “△ ▽” and select the item.

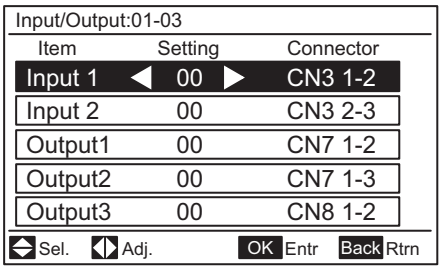

5. Press “◁ ▷” and change the setting.

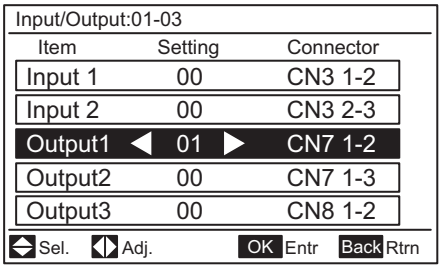

6. Press “OK” so that the confirmation screen will be displayed.

7. Select “Yes” and press “OK”.
The Test Run menu will be displayed after the setting is confirmed.
If “No” is selected, the screen will return to "4".

8. Press “Back/Help” on the Test Run menu to return to the normal mode.

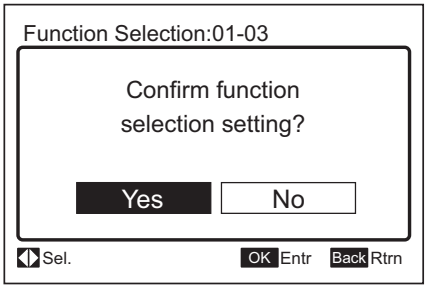

(Figure for Function Selection)

To set other units, press “Back/Help” at "4" and "5" so that the screen will return to "3".
(If the number of an indoor unit connected with the controller is "1", the screen will return to "1".)

5.4.1 External Input and Output Settings

On the Indoor Unit Printed Circuit Board (PCB), there are two input terminals (CN3) to receive external signals and three output terminals (CN7, CN8) to send signals out. Functions shown in these tables are available when setting input and output terminals.

< Input and Output Number Display and Connectors >

Input Number Display	Port	Factory Setting		Setting
Input/Output Indication		Setting Item	Indication	
Input 1	CN3 1-2	Remote ON/OFF 1 (Level)	03	
Input 2	CN3 2-3	Prohibiting Remote Control after Manual Stoppage	06	
Output 1	CN7 1-2	Operation	01	
Output 2	CN7 1-3	Alarm	02	
Output 3	CN8 1-2	Thermo-ON for Heating	06	

< Input and Output Settings and Display Codes >

Code Indicated	Input	Output
00	Not set	Not set
01	Room Thermostat (for Cooling)	Operation
02	Room Thermostat (for Heating)	Alarm
03	Remote ON/OFF 1 (Level)	Cooling
04	Remote ON/OFF 2 (Operation)	Thermo-ON for Cooling
05	Remote ON/OFF 2 (Stoppage)	Heating
06	Forbidding Remote Control after Manual Stoppage	Thermo-ON for Heating
07	Remote Cooling / Heating Change	Total Heat Exchanger
09	Setback Temperature	N/A

NOTES:
1. Change the optional setting after waiting at least three minutes elapsed time after start-up.
2. Do not set the elevating grille for the total heat exchanger.
3. Record the setting conditions for each input and output in the “Setting” column of the table.

5.4.1.1 Remote Control ON/OFF Function

This function provides a control to stop and start the system automatically from a remote place. Four methods are available by using each signal from a building management system.

(1) Remote ON/OFF 1 (Level Signal Input) [Input Setting: Code (03)]

This is an ON/OFF function from a remote place by using level signals (ON/OFF). An example of basic wiring and time chart is shown below.

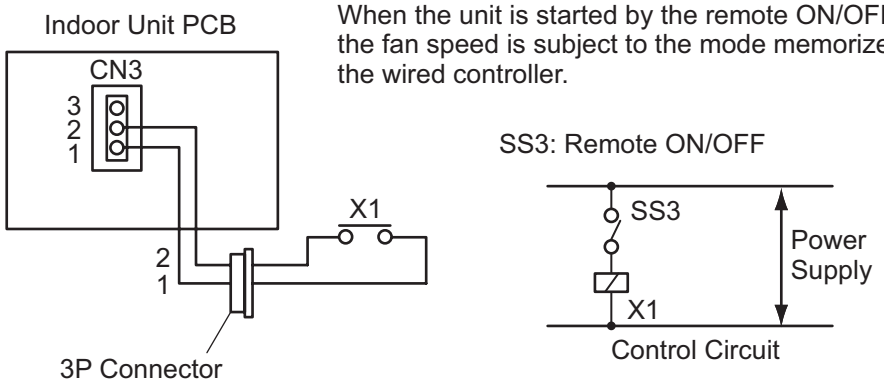

Wiring Diagram Example of Remote ON/OFF
(Example: Remote ON/OFF is set to terminals 1 and 2 of CN3)

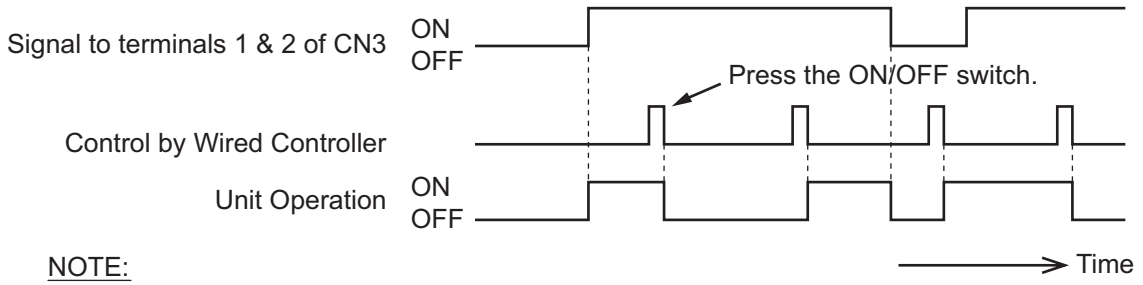

NOTE:
Operation priority is given to the remote ON/OFF signal or wired controller signal which is given last.

Time Chart
(Example: Remote ON/OFF is set to terminal 1 and 2 of CN3)

NOTES:

1. Picking up signal within 10 seconds after power supply is turned ON is not possible due to initialization of the components.
   Do not change the signal (ON/OFF) in this period.
2. Wired Controller is required for this function.
3. If multiple indoor units are connected to the same communication cable for wired controller, input the signal to any of these indoor units.
4. When the communication cable is not used in the twin, triple and quad combinations for simultaneous operation, input the signal to the main indoor unit.

(2) Remote ON/OFF 2 (Pulse Signal Input) [Input Setting: Code (04)]

This is an ON/OFF function from a remote place by using pulse signals. An example of basic wiring and time chart is shown below.

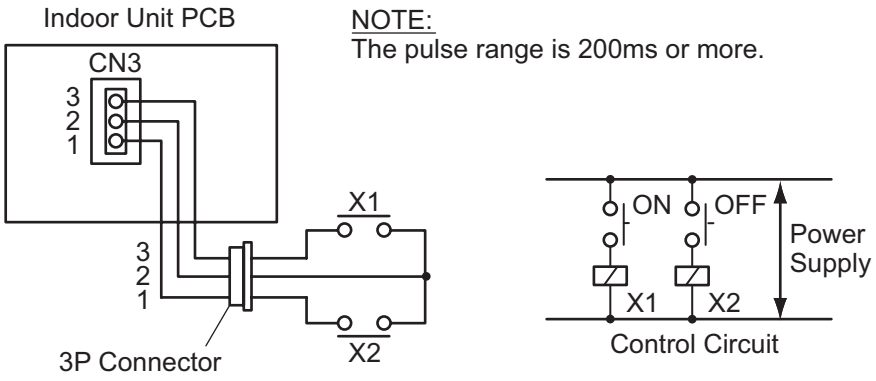

Wiring Diagram Example of Remote ON/OFF 2

(Example: Operation Input is set to terminals 2 and 3 of CN3.
Stoppage Input is set to terminals 1 and 2 of CN3.)

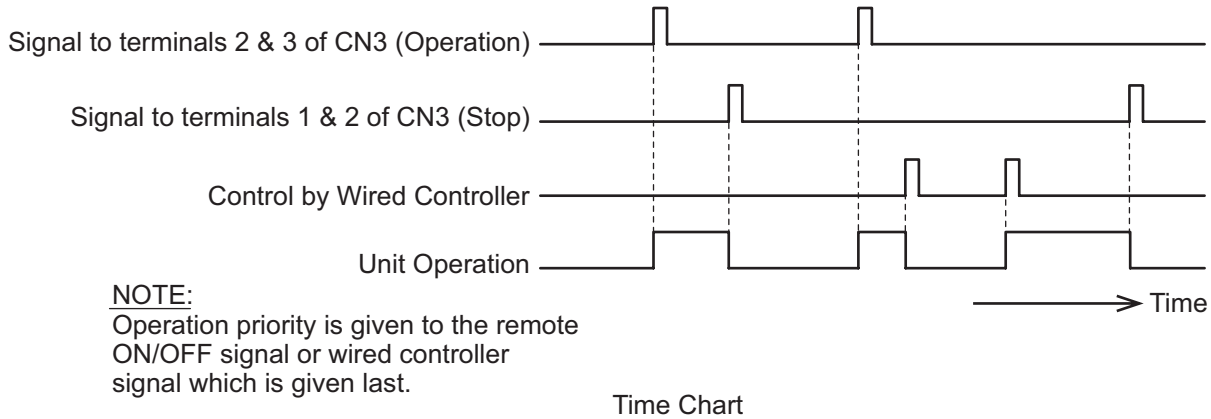

Time Chart

(Example: Operation Input is set to terminals 2 and 3 of CN3.
Stoppage Input is set to terminals 1 and 2 of CN3.)

NOTES:

1. Picking up signal within 10 seconds after power supply is turned ON is not possible due to initialization of the components.
   Do not change the signal (ON/OFF) in this period.
2. Wired Controller is required for this function.
3. If multiple indoor units are connected to the same communication cable for wired controller, input the signal to any of these indoor units.
4. When the communication cable is not used in the twin, triple and quad combinations for simultaneous operation, input the signal to the main indoor unit.

(3) Remote ON/OFF 3 (Pulse Signal Input) [Input Setting: Code (05)]

The setting for Remote ON/OFF 3 shall be the same as that for Remote ON/OFF 2. By using the signal from a building management system, the indoor units can be stopped.
If a signal is input during the stoppage of the indoor units, the unit remains unchanged.
An example of basic wiring and time chart is shown below.

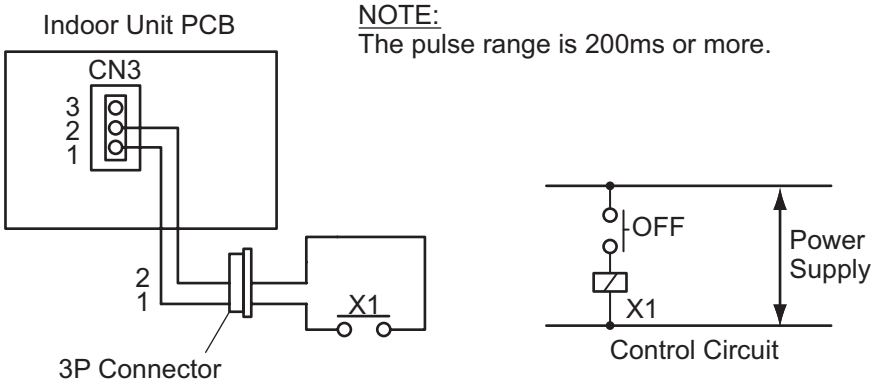

NOTE:
The pulse range is 200ms or more.

Wiring Diagram Example of Remote ON/OFF 3
(Example: Stoppage Input is set to terminals 1 and 2 of CN3.)

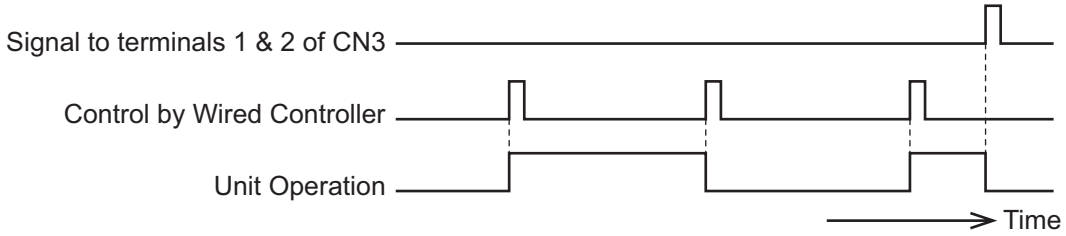

Time Chart
(Example: Stoppage Input is set to terminals 1 and 2 of CN3.)

NOTES:
1. Picking up signal within 10 seconds after power supply is turned ON is not possible due to initialization of the components.
   Do not change the signal (ON/OFF) in this period.
2. Wired Controller is required for this function.
3. If multiple indoor units are connected to the same communication cable for wired controller, input the signal to any of these indoor units.
4. When the communication cable is not used in the twin, triple and quad combinations for simultaneous operation, input the signal to the main indoor unit.

(4) Forbidding Remote Control after Manual (Forced) Stoppage (Level Signal Input)
[Input Setting: Code (06)]

By using the signal from a building management system, the indoor units can be stopped and the individual commands from the wired controller are canceled. An example of basic wiring and time chart is shown below.

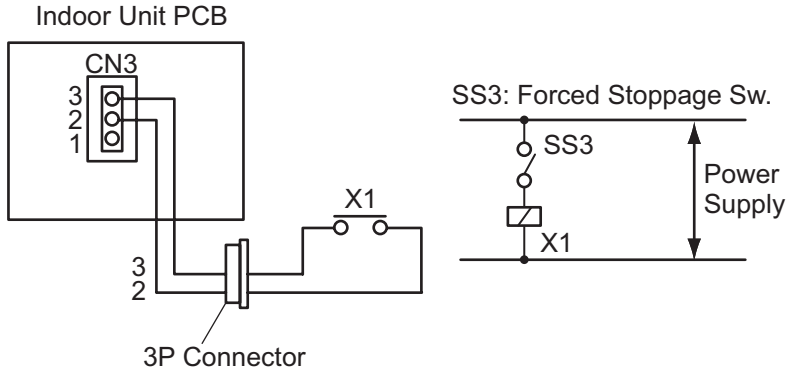

Wiring Diagram Example
(Example: Forbidding Remote Control after Manual (Forced) Stoppage is set to terminals 2 and 3 of CN3.)

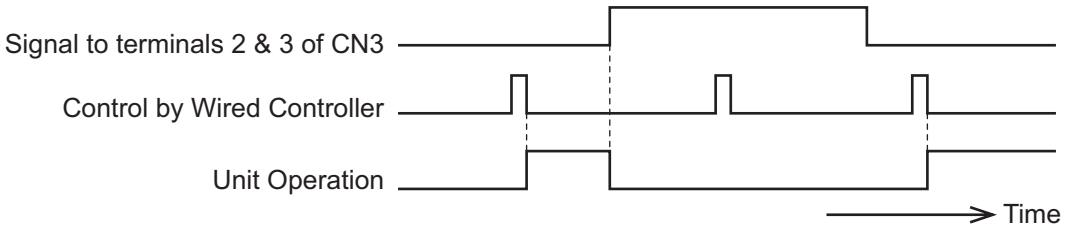

Time Chart
(Example: Forbidding Remote Control after Manual (Forced) Stoppage is set to terminals 2 and 3 of CN3.)

This function can be used for B contacts if using “Selection of Forced Stoppage Logic” in Section 5.4.2.1 “Function Selection Item.” An example of time chart is shown below.

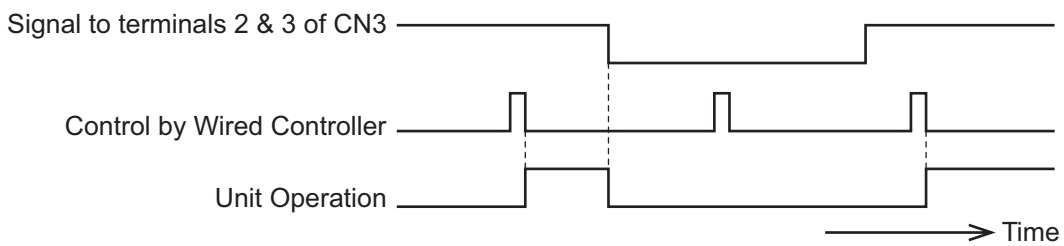

Time Chart
(Example: Setting for B Contacts)

NOTES:
1. Picking up signal within 10 seconds after power supply is turned ON is not possible due to initializing of components.
   Do not change the signal (ON/OFF) in this period.
2. Wired Controller is required for this function.
3. The following ON/OFF functions are not available after the manual (forced) stoppage because commands from the wired controller are canceled.
   a. ON/OFF function from a remote place
   b. ON/OFF function by the centralized controller while the wireless wired controller is used.

Table 5.1 Specifications on Required Components for (1) to (4) Functions

Component		Manufacturer or Specifications	Remarks
Auxiliary Relay (X1, X2)		OMRON Mini Power Relay Model: MY1F/2F or Equivalent	Voltage 220V
Changeover Switch (SS2, SS3)		Manual Type	
3P Connector Cord		Optional Part PCC-1A (Connectable to JST Connector XARP-3), 12V	Five Cords with Connectors as One Set
Cord (Indoor)	Low Voltage	AWG22 (0.3mm^2)	less than 12V
	220V Class	AWG20 or AWG18 (0.5 to 0.75mm^2)	
Cord (Outdoor)	Low Voltage	AWG20 or AWG18 (0.5 to 0.75mm^2)	less than 12V
	220V Class	AWG14 (2mm^2)	

NOTE:

1. Make the wires CN3 as short as possible. Do not install the wires with the 220V power line. Install them more than 12 in. (30cm) away from each other. (Intersecting them is acceptable.)
   If the wires are installed along the power line, comply with the following points to prevent noise.
   a. Pass either of the low voltage wire and 220V power line through a metal conduit tube and ground one end.
   b. Use a shielded wire for a low voltage wire and ground one end.
   The maximum wiring length is 230 ft. (70m).

2. When using this function, it is recommended that safety devices such as an electric leakage breaker or smoke detector, etc., be used because this is an unattended function.

5.4.1.2 Power Supply ON/OFF 1 (Automatic Operation When Power Supply Is ON)

This function is utilized to run/stop the unit by turning ON/OFF the power supply. When this function is utilized in the condition that there is no person to operate the unit, monitor the system for disaster prevention. When using this function, refer to Section 5.4.2.2 "(30) Power Supply ON/OFF (Automatic Operation When Power Supply Is ON) (d1)" for the setting.

NOTE:
1. The unit will be stopped even when the power supply is turned ON/OFF due to power failure. If power failure occurs during the stoppage of the unit, the operation is restarted after the power supply is restored.
2. Wired Controller is required for this function.
3. When the communication cable is not used in the twin, triple and quad combinations for simultaneous operation, set this function only to the main indoor unit.

5.4.1.3 Power Supply ON/OFF 2 (Restarting Function After Power Failure)

This function is utilized to restart the unit operation automatically when the power supply is restored after the power failure over 2 seconds. In case of the power failure for 2 seconds or less, the standard unit memorize all the operation mode and restarts the operation automatically. (The compressor restarts operation after 3 minutes guard in addition to power failure time for up to 2 seconds.)
When this function is utilized in the condition that there is no person to operate the unit, monitor the system for disaster prevention. When using this function, refer to Section 5.4.2.2 "(32) Power Supply ON/OFF (Restarting Function after Power Failure) (d3)" for setting.

NOTE:
1. If power failure occurs during the stoppage of the unit, the unit remains stopped after the power supply is restored.
2. Wired Controller is required to be connected for setting this function.
3. When the communication cable is not used in the twin, triple and quad combinations for simultaneous operation, set this function only to the main indoor unit.

5.4.1.4 Control by Field-Supplied Room Thermostat
[Input Setting: Code (01) (for Cooling), Code (02) (for Heating)]

In a case where a field-supplied room thermostat is used instead of the inlet thermistor of the indoor unit in order to run/stop the compressor, connect wires as shown below.

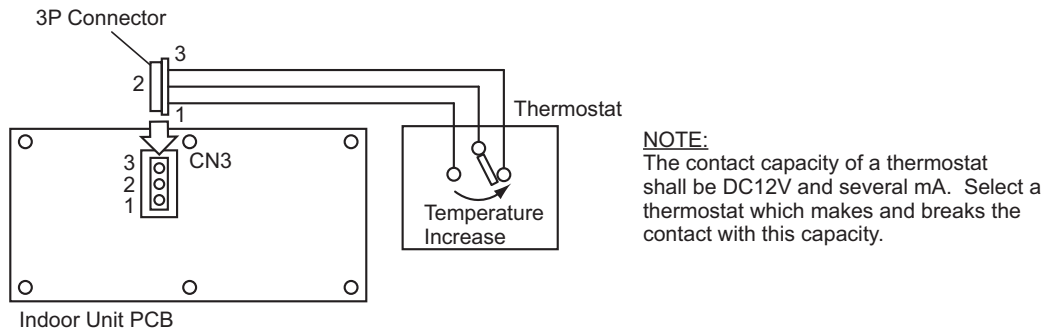

NOTE:
The contact capacity of a thermostat shall be DC12V and several mA. Select a thermostat which makes and breaks the contact with this capacity.

Field-Supplied Room Thermostat
(Example: Room Thermostat Input (for Cooling) is set to terminals 2 and 3 of CN3
Room Thermostat Input (for Heating) is set to terminals 1 and 2 of CN3)

Operation

Cooling Operation:	Compressor is ON by closing terminals 2 and 3 of CN3
	Compressor is OFF by opening terminals 2 and 3 of CN3
Heating Operation:	Compressor is ON by closing terminals 1 and 2 of CN3
	Compressor is OFF by opening terminals 1 and 2 of CN3

NOTE:
1. Make the wires CN3 as short as possible. Do not install the wires along the 220V power line. Install them more than 12 in. (30cm) away from each other. (Intersecting them is acceptable.)
   If the wires are installed along the power line, comply with the following points to prevent noise.
   a. Pass either of the low voltage wire and 220V power line through a metal tube and ground one end.
   b. Use a shielded wire for a low voltage wire and ground one end.
   The maximum wiring length is 230 ft. (70m).
2. When using this function, it is recommended that safety devices such as an electric leakage breaker or smoke detector, etc., be used because this is an unattended function.
3. For a thermostat, do not use a thermostat which uses mercury for a switch, because chattering is likely to occur at ON/OFF.
4. Use a thermostat with a differential of 2°F (1.5°C) or more.
5. Comply with the following points. If not, a high-voltage circuit breaker will be activated or the unit will repeat ON/OFF operation.
   a. Install a thermostat where air inlet temperature can be detected correctly.
   b. Install a thermostat where discharge air from the unit does not blow directly against it.
6. When using a room thermostat, set each room thermostat (for cooling and heating) correctly. If any of them is set incorrectly, other room thermostats do not operate.

5.4.1.5 Remote Cooling/Heating Change [Input Setting: Code (07)]

The cooling or heating operation mode can be changed by giving a contact signal from the outside to the unit. Set this function to CN3 with a wired controller according to Section 5.4.2.1 “Function Selection Item.” This function detects ON to OFF transition and OFF to ON transition. Of the commands by this signal and a wired controller, the command given later is preferentially executed. An example of basic wiring and time chart is shown below.

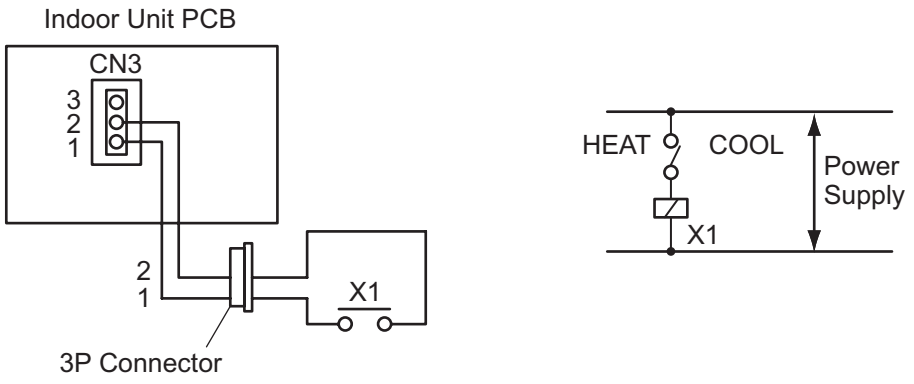

Wiring Diagram Example
(Example: Remote Cooling/Heating Change is set to terminals 1 and 2 of CN3.)

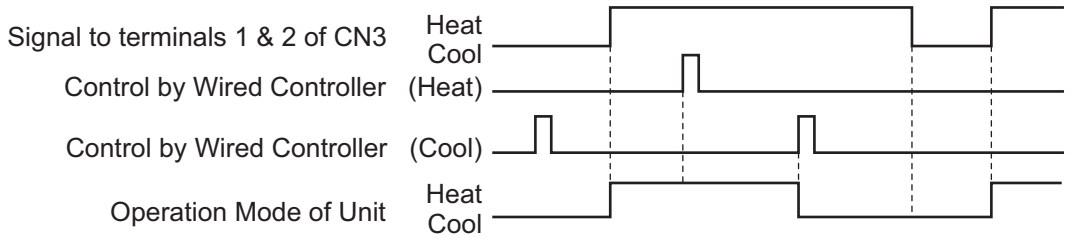

Time Chart
(Example: Remote Cooling/Heating Change is set to terminals 1 and 2 of CN3.)

NOTES:
1. Wired Controller is required for this function.
2. Refer to Table 5.1 for details of the required components.
3. If multiple indoor units are connected to the same communication cable for wired controller, input the signal to any of these indoor units.
4. When the communication cable is not used in the twin, triple and quad combinations for simultaneous operation, set this function only to the main indoor unit.

5.4.1.6 Picking Up Operation Signal

Up to 3 of the following 7 signals can be picked up by setting this function to CN7 and CN8 according to the following figures. Make sure to use a field-supplied remote control adopter PSC-5RA for picking up signals. The wiring length shall be 230 ft. (70m) or less. The settings for picking up signals (1), (2) and (4) are already set at the factory.

(1) Picking Up Operation Signal [Output Setting: Code (01)]

This function is utilized to pick up an operation signal that has nothing to do with the compressor stoppage by a thermistor. An example of basic wiring is shown below. The contact of the auxiliary relay “RYa” is closed when this operation signal is given. This function enables the signal check during remote control operation and an interlock of the fan for air inlet, etc. The contact of the auxiliary relay “RYa” is opened while the protection devices are activated.

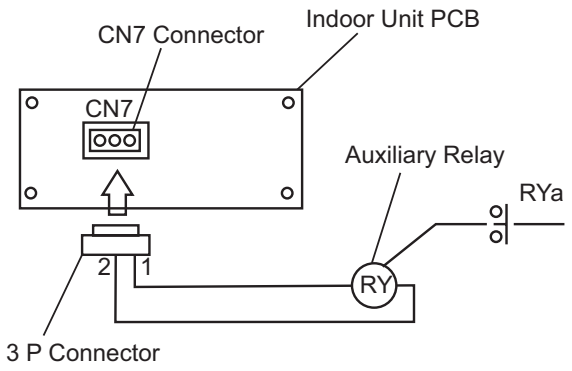

Picking Up Operation Signal
(Example: Operation Output is set to terminals 1 and 2 of CN7.)

(2) Picking Up Alarm Signal [Output Setting: Code (02)]

This signal is utilized to pick up an alarm signal while safety devices are activated. However, this function is not available during abnormal communication of the wired controller. An example of basic wiring is shown below. The contact of the auxiliary relay “RYa” is closed while the protection devices are activated.

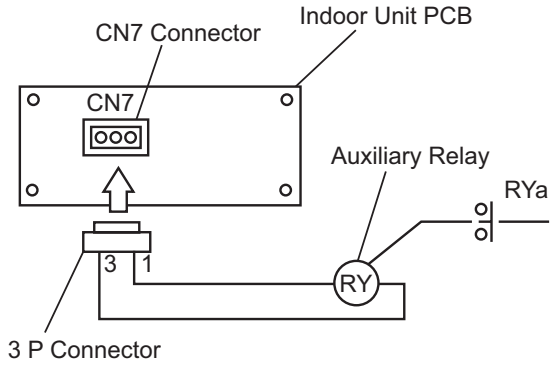

Picking Up Alarm Signal

(Example: Alarm Output is set to terminals 1 and 3 of CN7.)

(3) Picking Up Cooling Operation Signal [Output Setting: Code (03)]

This function is utilized to pick up a cooling operation signal that has nothing to do with the compressor stoppage by a thermistor. An example of basic wiring is shown below. The contact of the auxiliary relay “RYa” is closed when this operation signal is given.

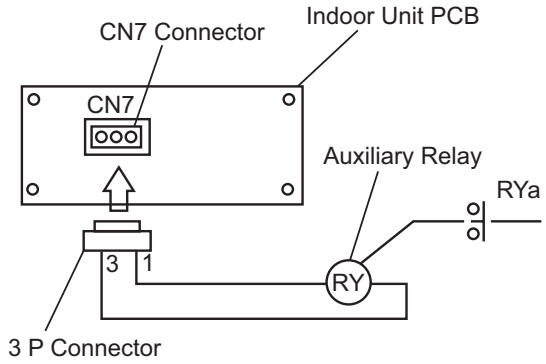

Picking Up Operation Signal
(Example: Cooling Operation Output is set to terminals 1 and 3 of CN7.)

(4) Picking Up Cooling Thermo-ON Signal [Output Setting: Code (04)]

This function is utilized to pick up a thermo-ON signal during the cooling operation. An example of basic wiring is shown below. The contact of the auxiliary relay “RYa” is closed during thermo-ON in cooling operation.

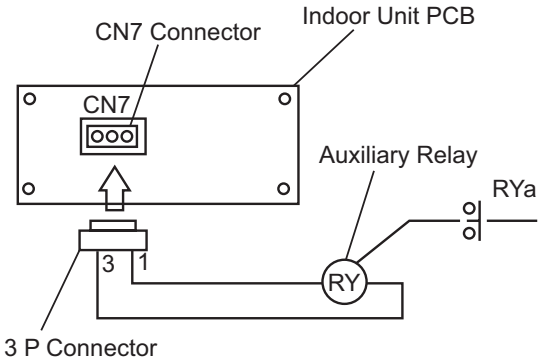

Picking Up Cooling Operation Signal
(Example: Cooling Thermo-ON Output is set to terminals 1 and 3 of CN7.)

(5) Picking Up Heating Operation Signal [Output Setting: Code (05)]

This function is utilized to pick up a heating operation signal that has nothing to do with the compressor stoppage by a thermistor. An example of basic wiring is shown below. The contact of the auxiliary relay “RYa” is closed when this operation signal is given.

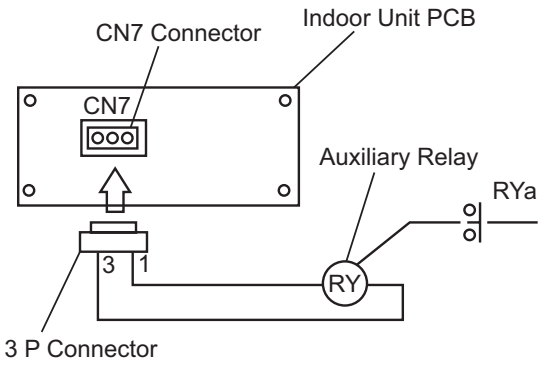

Picking Up Operation Signal
(Example: Heating Operation Output is set to terminals 1 and 3 of CN7.)

(6) Picking Up Heating Thermo-ON Signal [Output Setting: Code (06)]

This function is utilized to pick up a thermo-ON signal during the heating operation. An example of basic wiring is shown below. The contact of the auxiliary relay “RYa” is closed during thermo-ON in heating operation. Use this function for operation of a circulator or a humidifier.

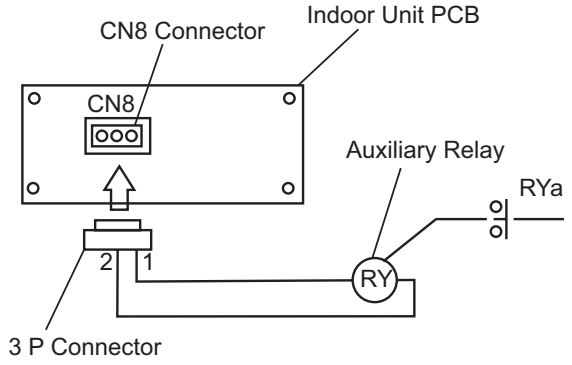

Picking Up Operation Signal
(Example: Heating Thermo-ON Output is set to terminals 1 and 2 of CN8.)

(7) Picking Up Total Heat Exchanger Signal [Output Setting: Code (07)]

This function is utilized to pick up a total heat exchanger signal during the ventilation mode selected with a wired controller. An example of basic wiring is shown below.

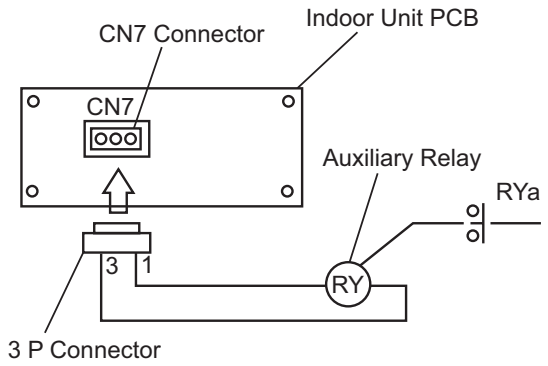

Picking Up Total Heat Exchanger Signal
(Example: Cooling Thermo-ON Output is set to terminals 1 and 3 of CN7.)

NOTE:
These are examples using general-purpose relay.

5.4.2 Function Setting

5.4.2.1 Function Selection Item

No.	Items	Optional Function	Individual Setting	Setting Condition	Contents
1	b1	Cancellation of Heating Temperature Compensation due to Uneven Heat Load	○	00 01 02 03 04	Standard (Set Temp. +7°F (+4°C)) Removal (Set Temp.) Set Temp. +3°F (+2°C) (*1) Set Temp. +5°F (+3°C) Set Temp. +2°F (+1°C)
2	b2	Circulator Function during Heating Thermo-OFF	○	00 01	Not Available Available
3	b3	Not Prepared	-	-	Not Used (Use as 00 conditions)
4	b4	Change of Filter Cleaning Time	-	00 01 02 03 04	Standard 1,200 hrs (Factory-Setting) 100 hrs 1,200 hrs 2,500 hrs No Indication
5	b5	Fixing of Operation Mode	×	00 01	Standard Fixed
6	b6	Fixing of Setting Temperature	×	00 01	Standard Fixed
7	b7	Fixing of Operation as Exclusive Cooling Unit	×	00 01	Standard Fixed
8	b8	Automatic COOL/HEAT Operation	×	00 01	Not Available Available
9	b9	Fixing of Fan Speed	×	00 01	Standard Fixed
10	bA	Not Prepared	-	-	Not Used
11	bb	Cooling Temperature Compensation due to Uneven Heat Load	×	00 01 02	Standard (No Compensation) Set Temp. –2°F (–1°C) Set Temp. –3°F (–2°C)
12	bC	Not Prepared	-	-	Not Used (Use as 00 conditions)
13	bd	Not Prepared	-	-	Not Used (Use as 00 conditions)
14	bE	Not Prepared	-	-	Not Used (Use as 00 conditions)
15	C1	Not Prepared	-	-	Not Used (Use as 00 conditions)
16	C2	Not Prepared	-	-	Not Used
17	C3	Not Prepared	-	-	Not Used
18	C4	Not Prepared	-	-	Not Used
19	C5	Hi Speed (Except for Hi Speed during Heating Thermo-OFF)	○	00 01 02	Not Available Hi Speed 1 Hi Speed 2
20	C6	Hi Speed during Heating Thermo-OFF	○	00 01	Not Available Available
21	C7	Canceling of Enforced 3 Minutes Minimum Operation Time of Compressor	○	00 01	Standard Cancellation
22	C8	Thermistor of Wired Controller (*6)	○	00 01 02 00 01 02	< If Wired Controller Thermistor is Selected > Not Available Control by Thermistor of Wired Controller Control by Average Value of Indoor Suction Thermistor and Thermistor of Wired Controller < If Remote Sensor is Selected > Control by Average Value of Indoor Suction Thermistor and Remote Sensor Control by Remote Sensor Same as "00"
23	C9	Not Prepared	-	-	Not Used
24	CA	Not Prepared	-	-	Not Used
25	Cb	Selection of Forced Stoppage Logic	×	00 01	Forced Stoppage Input: A Contact Forced Stoppage Input: B Contact

No.	Items	Optional Function	Individual Setting	Setting Condition	Contents
26	CC	Not Prepared	-	-	Not Used (Use as 00 conditions)
27	Cd	Not Prepared	-	-	Not Used (Use as 00 conditions)
28	CE	Not Prepared	-	-	Not Used (Use as 00 conditions)
29	CF	Change of Louver Swing Angle	○	00 01 02	Standard (7-Step Operation) Cold Draft Prevention (5 Steps: lower 2 steps cut off) High Ceiling (higher 2 steps cut off)
30	d1	Power Supply ON/OFF 1	○	00 01	Not Available Available
31	d2	Not Prepared	-	-	Not Used
32	d3	Power Supply ON/OFF 2	○	00 01	Not Available Available
33	d4	Not Prepared	-	-	Not Used (Use as 00 conditions)
34	d5	Prevention for Heating Discharge Air Temp. Decrease	○	00 01	Not Available Available
35	d6	Not Prepared	-	-	Not Used (Use as 00 conditions)
36	d7	Not Prepared	-	-	Not Used
37	E1	Not Prepared	-	-	Not Used (Use as 00 conditions)
38	E2	Not Prepared	-	-	Not Used (Use as 00 conditions)
39	E3	Not Prepared	-	-	Not Used (Use as 00 conditions)
40	E4	Not Prepared	-	-	Not Used (Use as 00 conditions)
41	E5	Not Prepared	-	-	Not Used (Use as 00 conditions)
42	E6	Indoor Fan Operation Time After Cooling Operation Stoppage	○	00 01 02	Not Available 60 min. 120 min.
43	E7	Not Prepared	-	-	Not Used (Use as 00 conditions)
44	E8	Fan Operation Control during Heating Thermo-OFF	○	00 01	Not Available (LOW) SLOW
45	E9	Not Prepared	-	-	Not Used (Use as 00 conditions)
46	EA	Not Prepared	-	-	Not Used (Use as 00 conditions)
47	Eb	Fan Operation Control during Cooling Thermo-OFF	○	00 01 02	Not Available LOW SLOW
48	EC	Forced Thermo-ON Stoppage during Cooling	○	00 01	Not Available Available
49	Ed	Not Prepared	-	-	Not Used (Use as 00 conditions)
50	EE	Not Prepared	-	-	Not Used (Use as 00 conditions)
51	EF	Automatic Fan Speed Control (High 2)	○	00 01	Not Available Available
52	F0	Not Prepared	-	-	Not Used
53	F1	Automatic OFF Timer Setting * Do not set the functions “0C”~“0F” when 2 (two) wired controllers are used in the same controller group.	×	00 01 02 • • 23 24 0A 0B 0C 0D 0E 0F	No Function OFF Timer by 1 hr OFF Timer by 2 hrs • • OFF Timer by 23 hrs OFF Timer by 24 hrs OFF Timer by 30 min. OFF Timer by 90 min. OFF Timer by 40 min. OFF Timer by 45 min. OFF Timer by 50 min. OFF Timer by 55 min. } Do not set them when two wired controllers are used.
54	F2	Wired Controller Main-Sub Setting	×	00 01	Main Sub
55	F3	Automatic Reset of Setting Temperature (*2)	×	00 01	Not Available Available

No.	Items	Optional Function	Individual Setting	Setting Condition	Contents
56	F4	Automatic Reset Time	×	00 01 02 03	30 min. (Factory-Setting) 15 min. 60 min. 90 min.
57	F5	Automatic Reset Temperature for Cooling (*3)	×	66 (19) 68 (20) 70 (21) 72 (22) 74 (23) 76 (24) 77 (25) 78 (26) 80 (27) 82 (28) 84 (29) 86 (30)	66°F (19°C) 68°F (20°C) 70°F (21°C) 72°F (22°C) 74°F (23°C) 76°F (24°C) 77°F (25°C) (Factory-Setting) 78°F (26°C) 80°F (27°C) 82°F (28°C) 84°F (29°C) 86°F (30°C)
58	F6	Automatic Reset Temperature for Heating (*4)	×	62 (17) 64 (18) 66 (19) 68 (20) 70 (21) 72 (22) 74 (23) 76 (24) 77 (25) 78 (26) 80 (27) 82 (28) 84 (29) 86 (30)	62°F (17°C) 64°F (18°C) 66°F (19°C) 68°F (20°C) 70°F (21°C) (Factory-Setting) 72°F (22°C) 74°F (23°C) 76°F (24°C) 77°F (25°C) 78°F (26°C) 80°F (27°C) 82°F (28°C) 84°F (29°C) 86°F (30°C)
59	F7	Operation Stoppage Prevention by Wired Controller Operational Error (*5)	×	00 01	Not Available Available
60	F8	Lock Function for Operation Mode Selection	×	00 01	Not Available Available (Factory-Setting)
61	F9	Lock Function for Temperature Setting	×	00 01	Not Available Available (Factory-Setting)
62	FA	Lock Function for Fan Speed Selection	×	00 01	Not Available Available (Factory-Setting)
63	Fb	Lock Function for Swing Louver Operation	×	00 01	Not Available Available (Factory-Setting)
64	FC	Cooling Lower Limit for Setting Temperature (*3)	×	00 01 02 03 04 05 06 07 08 09 10	66°F (19°C) 68°F (20°C) 70°F (21°C) 72°F (22°C) 74°F (23°C) 76°F (24°C) 77°F (25°C) 78°F (26°C) 80°F (27°C) 82°F (28°C) 84°F (29°C)
65	Fd	Heating Upper Limit for Setting Temperature (*4)	×	00 01 02 03 04 05 06 07 08 09 10 11 12	86°F (30°C) 84°F (29°C) 82°F (28°C) 80°F (27°C) 78°F (26°C) 77°F (25°C) 76°F (24°C) 74°F (23°C) 72°F (22°C) 70°F (21°C) 68°F (20°C) 66°F (19°C) 64°F (18°C)

No.	Items	Optional Function	Individual Setting	Setting Condition	Contents
66	FE	Not Prepared	-	-	Not Used (Use as 00 conditions)
67	FF	Not Prepared	-	-	Not Used (Use as 00 conditions)
68	H1	Not Prepared	-	-	Not Used (Use as 00 conditions)
69	H2	Indication of Hot Start	×	00 01	Indication No Indication
70	H3	Not Prepared	-	-	Not Used (Use as 00 conditions)
71	H4	Not Prepared	-	-	Not Used (Use as 00 conditions)
72	J1	Not Prepared	-	-	Not Used (Use as 00 conditions)
73	J2	Not Prepared	-	-	Not Used
74	J3	Run Indicator Color	×	00 01	Green Red
75	J4	Not Prepared	-	-	Not Used (Use as 00 conditions)
76	J5	Not Prepared	-	-	Not Used (Use as 00 conditions)
77	J6	Not Prepared	-	-	Not Used (Use as 00 conditions)
78	J7	Not Prepared	-	-	Not Used (Use as 00 conditions)
79	J8	Eco-operation (*7)	×	00 01	Not Available Available
80	J9	Not Prepared	-	-	Not Used (Use as 00 conditions)
81	JA	Not Prepared	-	-	Not Used (Use as 00 conditions)
82	Jb	Not Prepared	-	-	Not Used (Use as 00 conditions)
83	K1	Not Prepared	-	-	Not Used (Use as 00 conditions)
84	K2	Not Prepared	-	-	Not Used (Use as 00 conditions)
85	K3	Not Prepared	-	-	Not Used (Use as 00 conditions)
86	K4	Not Prepared	-	-	Not Used (Use as 00 conditions)
87	K5	Motion Sensor Detection Level	○	00 01 02	Standard High Low
88	K6	Operation Setting during Thermistor of Wired Controller or Remote Sensor	○	00 01 02 03	ALL COOL/DRY HEAT ALL
89	K7	Radiation Temperature Correction	○	00 01 02	Standard Upward (+3°F (+2°C)) Downward (-3°F (-2°C))
90	K8	Control of Dew Condensation Prevention	○	00 01	Not Available Available
91	K9	Not Prepared	-	-	Not Used (Use as 00 conditions)
92	KA	Not Prepared	-	-	Not Used (Use as 00 conditions)
93	L1	Motion Sensor Installation Position	○	00 01 02 03	A (Factory-Setting) B Not Available D
94	L2	Not Prepared	-	-	Not Used (Use as 00 conditions)
95	L3	Louver Setting during Energy-Saving Forced Thermo-OFF	○	00 01 02 03	Receive Air: Low (Standard) Receive Air: Medium Receive Air: High Not Available
96	L4	Fan Speed during Energy-Saving Forced Thermo-OFF	○	00 01	Not Available (Standard) Available
97	L5	Louver Swing Operation during Energy-Saving Forced Thermo-OFF	○	00 01	Not Available Available
98	L6	Not Prepared	-	-	Not Used (Use as 00 conditions)
99	L7	Not Prepared	-	-	Not Used (Use as 00 conditions)

No.	Items	Optional Function	Individual Setting	Setting Condition	Contents
100	L8	Not Prepared	-	-	Not Used (Use as 00 conditions)
101	L9	Not Prepared	-	-	Not Used (Use as 00 conditions)
102	LA	Not Prepared	-	-	Not Used (Use as 00 conditions)
103	Lb	Not Prepared	-	-	Not Used (Use as 00 conditions)
104	P1	Setting Temperature	×	00 01	Every 1°F (0.5°C) Every 2°F (1°C)
105	P2	Not Prepared	-	-	Not Used (Use as 00 conditions)
106	P3	Thermistor Selection	×	00 01 02 03	Inlet Air Thermistor Outlet Air Thermistor Thermistor of Wired Controller Remote Sensor
107	P4	Display of Thermistor Temperature	×	00 01	Not Available Available
108	P5	Setting Temperature Display during Fan Operation	×	00 01	Displayed Undisplayed
109	P6	ECO Button Operation	×	00 01	Available Not Available
110	P7	Menu Button Operation	×	00 01	Not Available Available
111	P8	Not Prepared	-	-	Not Used (Use as 00 conditions)
112	P9	Not Prepared	-	-	Not Used (Use as 00 conditions)
113	PA	Not Prepared	-	-	Not Used (Use as 00 conditions)
114	Pb	Not Prepared	-	-	Not Used (Use as 00 conditions)
115	PC	Not Prepared	-	-	Not Used (Use as 00 conditions)
116	q1	Not Prepared	-	-	Not Used (Use as 00 conditions)
117	q2	Not Prepared	-	-	Not Used (Use as 00 conditions)
118	q3	Not Prepared	-	-	Not Used (Use as 00 conditions)
119	q4	Not Prepared	-	-	Not Used (Use as 00 conditions)
120	q5	Not Prepared	-	-	Not Used (Use as 00 conditions)
121	q6	Not Prepared	-	-	Not Used
122	q7	Not Prepared	-	-	Not Used
123	q8	Not Prepared	-	-	Not Used
124	q9	Not Prepared	-	-	Not Used
125	qA	Not Prepared	-	-	Not Used
126	qb	Not Prepared	-	-	Not Used
127	qC	Not Prepared	-	-	Not Used
128	qd	Not Prepared	-	-	Not Used
129	r1	Dual Setpoint (for Automatic COOL/HEAT Operation)	○	00 01	Not Available Available
130	r2	Cooling/Heating Changeover Temperature (for Automatic COOL/HEAT Operation)	○	00 01 02 03 04 05	2°F (1.0°C) 3°F (1.5°C) 3°F (2.0°C) 4°F (2.5°C) 5°F (3.0°C) 1°F (0.5°C)
131	r3	Setback Temperature Compensation (During card key removal, setpoint is setbacked)	○	00 01 02 03 04 05 06 07 08 09 10	4°F (2.5°C) 5°F (3.0°C) 6°F (3.5°C) 7°F (4.0°C) 8°F (4.5°C) 9°F (5.0°C) 10°F (5.5°C) 1°F (0.5°C) 2°F (1.0°C) 3°F (1.5°C) 3°F (2.0°C)
132	r4	Not Prepared	-	-	Not Used

No.	Items	Optional Function	Individual Setting	Setting Condition	Contents
133	r5	Not Prepared	-	-	Not Used
134	r6	Not Prepared	-	-	Not Used
135	r7	Not Prepared	-	-	Not Used
136	r8	Not Prepared	-	-	Not Used
137	r9	Not Prepared	-	-	Not Used
138	rA	Not Prepared	-	-	Not Used
139	rb	Not Prepared	-	-	Not Used
140	S1	Not Prepared	-	-	Not Used
141	S2	Not Prepared	-	-	Not Used
142	S3	Not Prepared	-	-	Not Used
143	S4	Not Prepared	-	-	Not Used
144	S5	Not Prepared	-	-	Not Used
145	S6	Not Prepared	-	-	Not Used
146	S7	Not Prepared	-	-	Not Used
147	S8	Not Prepared	-	-	Not Used

*1): The “02” setting may not be available according to the type of indoor unit.

*2): In case that the set temperature is changed and the temperature is kept for a specific time set by “F4”, it automatically changes to the temperature set by “F5” or “F6.” (In case that the set temperature of “F5” and “F6”is out of range, the upper or lower limit temperature is applied.)

*3): Applicable to fan, cooling and dry operation modes.

*4): Applicable to heating operation mode.

*5): Operation is stopped by pressing the “⏻” (On/Off) button for 3 seconds.

*6): The sensor value at “C8” will be indicated. When the thermistor for wired controller is used, the average value of the thermistor for wired controller and the thermistor for indoor inlet will be indicated.

*7): When the unit is restarted by the wired controller, the temperature automatically changes to the setting temperature of “F5” or “F6”.

NOTES:

1. Wait at least 3 minutes from initial power ON to change the optional setting.
2. When changing “CF” setting (“Change of Louver Swing Angle”), restore the power supply or test the louver swing a couple of times in the auto swing mode to validate the setting.
3. The optional settings are different according to the indoor and outdoor unit models.
   Check to ensure if the unit has the optional setting or not.
4. The above optional functions with “X” mark at the individual setting can change the condition only when “All Rooms” is selected in the Test Run Menu > Function Selection Menu.
5. Function selection items "q1" to "S8" are available only for indoor units and wired controllers with new software applied. Check to ensure if the unit has the optional setting or not.

5.4.2.2 Description of Function Selection Item

(1) Cancellation of Heating Temperature Compensation due to Uneven Heat Load (b1)

This function is utilized when the setting temperature of the wired controller and the inlet air temperature of the indoor unit are required to be equal.
This is useful when the inlet air thermistor is relocated to the outside of the indoor unit.

Setting Temperature for Room Temperature Control during Heating

Setting Condition	Actual Control Temperature
00 (Standard)	Wired Controller Setting Temperature (Indicated Value) +7°F (+4°C)
01	Wired Controller Setting Temperature (Indicated Value)
02	Wired Controller Setting Temperature (Indicated Value) +3°F (+2°C)
03	Wired Controller Setting Temperature (Indicated Value) +5°F (+3°C)
04	Wired Controller Setting Temperature (Indicated Value) +2°F (+1°C)

NOTE:
The maximum setting temperature after correction is as follows.
Inverter Multi Unit: 94°F (34°C)

(2) Circulator Function during Heating Thermo-OFF (b2)

In the standard factory setting, the air flow volume changes to “LOW” automatically to prevent a cold draft during heating Thermo-OFF.
Therefore, the air flow might not be distributed uniformly in the room depending on the installation location of the air conditioner or room structure. In such case, it is recommended to utilize this function.
The function keeps the air flow volume during Thermo-OFF at the same level as during Thermo-ON. The air flow in the room is kept at the same level as during Thermo-ON and so the room temperature will be uniformly-distributed. If using the air conditioner with auto swing function, the auto swing function will be activated even during heating Thermo-OFF.

NOTE:
The temperature sensibility and demands for air flow distribution differ depending on the person. It is therefore recommended to discuss these matters with customers thoroughly and then to install the unit accordingly.

(3) Not Prepared (b3)

(4) Change of Filter Cleaning Time (b4)

The period before filter sign indication is set according to indoor unit model before shipment.
The filter sign (“FLTR” on wired controller) is indicated according to the filter cleaning time (Factory Setting). However, this filter cleaning time can be changed depending on the condition of the filter as shown in the table below.

Period for Filter Sign Indication	Approx. 1,200 hrs.	Approx. 100 hrs.	Approx. 1,200 hrs.	Approx. 2,500 hrs.	No Indication
Liquid Crystal Display on Wired Controller	00 (Factory Setting)	01	02	03	04

NOTE:
While “Control by External Input” is valid, the filter sign will be “No Indication” if the external input is disconnected.

(5) Fixing of Operation Mode (b5)

This function is utilized when the operation mode is not required to be changed.
When this function is valid, the set operation mode cannot be changed by the wired controller.

(6) Fixing of Setting Temperature (b6)

This function is utilized when setting temperature is not required to be changed.
When this function is valid, the setting temperature cannot be changed by the wired controller.

(7) Fixing of Operation as Exclusive Cooling Unit (b7)
This function is utilized when exclusive cooling operation is required.
This function invalidates the heating operation and the automatic COOL/HEAT operation, as the operation of exclusive cooling unit.

(8) Automatic COOL/HEAT Operation (b8)
This function is utilized to change cooling and heating operation automatically (the same operation mode for indoor units in the same refrigerant cycle).
This function is invalid when the outdoor unit is cooling-only model or the function of “Fixing of Operation as Exclusive Cooling Unit” is valid.

(9) Fixing of Fan Speed (b9)
This function is utilized to fix the fan speed.
When this function is valid, the fan speed can not be changed by the wired controller.

(10) Not Prepared (bA)

(11) Cooling Temperature Compensation due to Uneven Heat Load (bb)
This function is utilized to provide the longer cooling operation time than the standard.
When this function is valid, Thermo-ON/OFF is controlled under the lower temperature conditions than the setting temperature (the indicated value) of the wired controller.

Setting Temperature for Room Temperature Control during Cooling

Setting Condition	Actual Control Temperature
00 (Standard)	Wired Controller Setting Temperature (Indicated Value)
01	Wired Controller Setting Temperature (Indicated Value) -2°F (-1°C)
02	Wired Controller Setting Temperature (Indicated Value) -3°F (-2°C)

NOTE:
The minimum setting temperature after correction is 66°F (19°C).

(12) Not Prepared (bC)

(13) Not Prepared (bd)

(14) Not Prepared (bE)

(15) Not Prepared (C1)

(16) Not Prepared (C2)

(17) Not Prepared (C3)

(18) Not Prepared (C4)

(19) Hi Speed (Except for Hi Speed during Heating Thermo-OFF) (C5)
This function is utilized to increase the fan speed for the sufficient air flow volume. It is recommended to use when the air flow volume is decreased by using the optional high ceiling installation or etc.

(20) Hi Speed during Heating Thermo-OFF (C6)
This function is utilized to increase the fan speed during heating Thermo-OFF with the function (19). (The fan speed does not increase during heating Thermo-OFF even if the function (19) is valid.)

(21) Canceling of Enforced 3 Minutes Minimum Operation Time of Compressor (C7)
The compressor operation is enabled for a minimum of 3 minutes when operation is started by the "Enforce 3 Minutes Minimum Operation Time of Compressor". This function is utilized to cancel the function “Enforced 3 Minutes Minimum Operation Time of Compressor” (Enforced 3 Minutes Compressor Guard).

NOTE:
The compressor operation is stopped immediately as following conditions.

- The protection device is activated.
- The operation stop button is pressed.

(22) Thermistor of Wired Controller (C8)

This function is utilized to control the unit by the built-in thermistor of the wired controller (wired controller thermistor) instead of the inlet air thermistor.
Set this function at “01” or “02” when utilizing this function.
However, even if this function is set at “01” or “02”, if the detecting temperature is abnormal due to the failure of the thermistor of the wired controller, etc., the control is changed to the inlet air thermistor of the indoor unit automatically.
The optional part Remote Sensor (THM-R2A) will control the unit when it is connected.

Selected Thermistor	Setting Condition	Controlled Indoor Temp.
Thermistor of Wired Controller	00	Indoor Suction Thermistor
	01	Thermistor of Wired Controller
	02	Average Value of Indoor Suction Thermistor and Thermistor of Wired Controller
Remote Sensor	00	Average Value of Indoor Suction Thermistor and Remote Sensor
	01	Remote Sensor
	02	Same as "00"

(23) Not Prepared (C9)

(24) Not Prepared (CA)

(25) Selection of Forced Stoppage Logic (Cb)

This function is utilized to select the logic of the contact for forced stoppage signal input.
The setting condition and the logic of the contact are as shown below.

Setting Condition	Logic of Contact	Sequence	Activation	
			Contact "Open"	Contact "Close"
00	A Contact	Indoor PCB 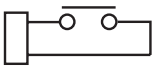	Normal	Forced Stoppage
01	B Contact	Indoor PCB 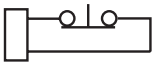	Forced Stoppage	Normal

(26) Not Prepared (CC)

(27) Not Prepared (Cd)

(28) Not Prepared (CE)

(29) Change of Louver Swing Angle (CF)

This function is utilized to the change louver swing angle.

Setting Condition	Louver Swing Angle (Air Discharge Angle)	Purpose
00	7 Steps	Standard Operation
01	Lower 2 Steps are Cut	Draft Prevention
02	Higher 2 Steps are Cut	For High Ceiling

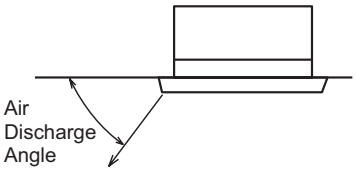

NOTE:
When changing the setting, turn OFF the power supply or allow the louver to make one complete swing fully in the auto swing mode to validate the setting.

(30) Power Supply ON/OFF 1 (Automatic Operation when Power Supply Is ON) (d1)

This function is utilized to run/stop the unit by turning ON/OFF the power supply.
When this function is utilized in the condition that there is no person to operate the unit, monitor the system for potential unit failure.

NOTE:
The unit will be stopped even when the power supply is turned ON/OFF due to power failure. If power failure occurs during the stoppage of the unit, the operation is restarted after the power supply is restored.

(31) Not Prepared (d2)

(32) Power Supply ON/OFF 2 (Restarting Function After Power Failure) (d3)

This function is utilized to restart the unit operation automatically when the power supply is restored after the power failure over 2 seconds. In case of the power failure for 2 seconds or less, the standard unit retains all the operation functions and restarts the operation automatically. (The compressor restarts operation after 3 minutes guard in addition to power failure time for up to 2 seconds.)
When this function is utilized in the condition that there is no person to operate the unit, monitor the system for potential unit failure.

NOTES:

1. If power failure occurs during the stoppage of the unit, the unit remains stopped after the power supply is restored.
2. When the compressor does not reach the fixed temperature, the system may not restart automatically after turning on the power supply by hot-start control.
   *Hot-start Control: The control program that does not operate the compressor even after the power is turned ON if the compressor does not reach the fixed temperature.

(33) Not Prepared (d4)

(34) Prevention for Heating Discharge Air Temperature Decrease (d5)

This function is utilized to prevent discharge air temperature decrease during the heating operation by making the actual fan speed lower than the speed indicated on the wired controller.

	Large ← Fan Speed → Small			
Indications on Wired Controller	HIGH2	HIGH	MED	LOW
Actual Fan Speed	HIGH	MED	LOW	LOW

NOTE:
The above table shows when the optional function setting “Hi Speed” is set as standard (00) by the wired controller.

(35) Not Prepared (d6)

(36) Not Prepared (d7)

(37) Not Prepared (E1)

(38) Not Prepared (E2)

(39) Not Prepared (E3)

(40) Not Prepared (E4)

(41) Not Prepared (E5)

(42) Indoor Fan Operation Time After Cooling Operation Stoppage (E6)

This function is utilized to prevent condensation upon cooling operation stoppage by setting “SLOW” indoor fan operation to dry. “SLOW” operation (for 60 minutes or 120 minutes by setting) continues even when the cooling operation is stopped.

(43) Not Prepared (E7)

(44) Fan Operation Control during Heating Thermo-OFF (E8)

This function is utilized to prevent the perception of cold draft by reducing the indoor fan speed during heating Thermo-OFF.

Setting Condition	Fan Operation during Thermo-OFF
00	LOW
01	SLOW

(45) Not Prepared (E9)

(46) Not Prepared (EA)

(47) Fan Operation Control during Cooling Thermo-OFF (Eb)

This function is utilized to prevent diffusion of odor and high humidity by reducing the indoor fan speed during cooling Thermo-OFF.

Setting Condition	Fan Operation during Thermo-OFF
00	Operation at Set Fan Speed
01	LOW
02	SLOW

(48) Forced Thermo-ON Stoppage during Cooling (EC)

This function is utilized to force Thermo-ON and then stop the operation when cooling operation is stopped.
This is effective to prevent abnormal odor because the heat exchanger is rinsed with drain water to keep in the clean condition.

(49) Not Prepared (Ed)

(50) Not Prepared (EE)

(51) Automatic Fan Speed Control (Corresponding to HIGH2) (EF)

This function is utilized to increase the maximum fan speed to "HIGH2" setting condition when the maximum fan speed remain "HIGH" by default.
The fan speed setting (EF) by Wired Controller are shown below.

Function Selection EF Setting	Wired Controller Setting				
	AUTO	HIGH2	HIGH	MED	LOW
00	HIGH - LOW	HIGH2	HIGH	MED	LOW
01	HIGH2 - LOW	HIGH2	HIGH	MED	LOW

(52) Not Prepared (F0)

(53) Automatic OFF Timer Setting (F1)

This function is utilized to set the OFF timer function automatically when the unit is operated by the wired controller. During the operation with the automatic OFF timer setting function, the cancellation of the OFF timer and the changing of the setting period for OFF timer can not be performed.
However, the OFF timer function is canceled when the unit is stopped. When the unit is operated again after stoppage, the setting period for OFF timer is set by the optional setting.
The setting condition and the setting period for OFF timer are shown below.

< Example for CIW01 >

Setting Condition	Setting Period for OFF Timer
00	Invalid
01	1 hour
02	2 hours
⋮	⋮
23	23 hours
24	24 hours
0A	30 minutes
0B	90 minutes
0C	40 minutes
0D	45 minutes
0E	50 minutes
0F	55 minutes

NOTES:

1. This function is not available when the unit is controlled by the centralized controller, the remote control connecting with Central Controllers.
2. The range of setting period for OFF timer differs depending on the wired controller model.

(54) Wired Controller Main-Sub Setting (F2)

This function is utilized when two wired controller are installed in one system.
Set one wired controller to main “00”, the other wired controller to sub “01”.

(55) Automatic Reset of Setting Temperature (F3)

This function is utilized to economize the operation. When this function is valid, in the case that the set temperature is not changed for certain period of time by the function (56) “Automatic Reset Time (F4)”, the set temperature automatically returns to (57/58) “Automatic Reset Temperature for Cooling/ Heating (F5/F6)” as following conditions. It is effective to optimize the setting temperature and provide energy saving. However, the setting temperature is not automatically reset in the case that “Automatic COOL/HEAT Operation” mode, or “Prohibiting Operation by Wired Controller” is set by the centralized controller.

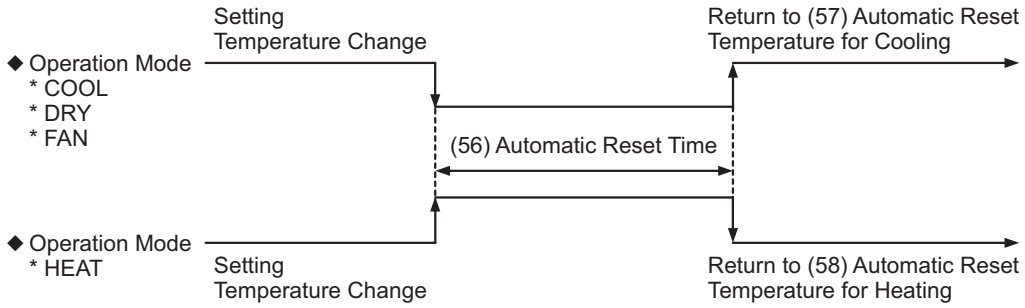

<Example> Automatic Reset Temperature for Cooling is 77°F (25°C)

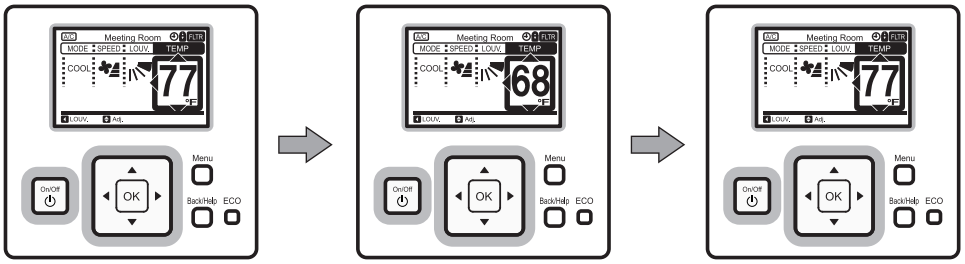

Setting temperature is changed from 77 to 68°F (25 to 20°C) by the wired controller.

Cooling operation at 68°F(20°C) is performed temporarily.

If no operation for a defined period, the setting temperature returns to 77°F (25°C) automatically.

(56) Automatic Reset Time (F4)

This function is utilized to set the automatic reset time with the set temperature.
The setting conditions and automatic reset time are as follows:

Setting Condition	Automatic Reset Time of Setting Temperature
00	30 minutes (Factory-Setting)
01	15 minutes
02	60 minutes
03	90 minutes

(57) Automatic Reset Temperature for Cooling (F5)

This function is utilized to set the automatic reset temperature for FAN/COOL/DRY operation.
The setting conditions and the automatic reset temperature for cooling are as follows:

Setting Condition	Setting Temperature for Automatic Reset
66 (19)	66°F (19°C)
68 (20)	68°F (20°C)
70 (21)	70°F (21°C)
72 (22)	72°F (22°C)
74 (23)	74°F (23°C)
76 (24)	76°F (24°C)
77 (25)	77°F (25°C) (Factory-Setting)
78 (26)	78°F (26°C)
80 (27)	80°F (27°C)
82 (28)	82°F (28°C)
84 (29)	84°F (29°C)
86 (30)	86°F (30°C)

(58) Automatic Reset Temperature for Heating (F6)

This function is utilized to set the automatic reset temperature for HEAT operation.
The setting conditions and the automatic reset temperature for heating are as follows:

Setting Condition	Setting Temperature for Automatic Reset
62 (17)	62°F (17°C)
64 (18)	64°F (18°C)
66 (19)	66°F (19°C)
68 (20)	68°F (20°C)
70 (21)	70°F (21°C) (Factory-Setting)
72 (22)	72°F (22°C)
74 (23)	74°F (23°C)
76 (24)	76°F (24°C)
77 (25)	77°F (25°C)
78 (26)	78°F (26°C)
80 (27)	80°F (27°C)
82 (28)	82°F (28°C)
84 (29)	84°F (29°C)
86 (30)	86°F (30°C)

(59) Operation Stoppage Prevention by Wired Controller Operational Error (F7)

This function is utilized to prevent the accidental operational stoppage caused by inadvertently pressing (ON/OFF) on the wired controller. When this function is valid, the operation is stopped by pressing "⏻" (ON/OFF) button on the wired controller for more than 3 seconds. However, the enabling method is not changed.

Operation Lock (60) to (63)

Four operation lock functions are available as shown below.
These functions are utilized to restrict each switch operation from the wired controller.
When these functions are valid, modification of each function is prohibited.
All operation lock functions are valid ("01" setting) before shipment.

Each switch operation becomes unavailable by pressing "▷" and "Back/Help" (return) buttons simultaneously for more than 3 seconds when these functions are set as "01". The indication "🔒" (operation lock indicator) is indicated on the wired controller. If "▷" and "Back/Help" (return) switches are pressed simultaneously for more than 3 seconds during "🔒" (operation lock indicator) is indicated, "🔒" indication is turned OFF and each switch operation is available. These functions are to restrict the operations of the wired controller only. If operation is preformed from the centralized controller, the command from the centralized controller is given priority.

(60) Lock Function for Operation Mode Selection (F8)

(61) Lock Function for Temperature Setting (F9)

(62) Lock Function for Fan Speed Selection (FA)

(63) Lock Function for Swing Louver Operation (Fb)

(64) Cooling Lower Limit for Setting Temperature (FC)

This function is utilized to limit the lowest setting temperature for FAN/COOL/DRY operations.
When this function is valid, it provides the appropriate cooling operation and energy saving.
The setting conditions and the minimum setting temperature for cooling are as follows:

<Example>

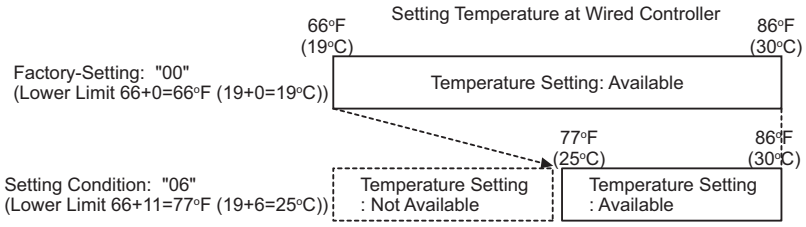

Setting Condition	Details	Minimum Setting Temperature (FAN/COOL/DRY) *
00	Standard Value	66°F (19°C)
01	Lower Limit +2°F (Lower Limit +1°C)	68°F (20°C)
02	Lower Limit +4°F (Lower Limit +2°C)	70°F (21°C)
03	Lower Limit +6°F (Lower Limit +3°C)	72°F (22°C)
04	Lower Limit +8°F (Lower Limit +4°C)	74°F (23°C)
05	Lower Limit +10°F (Lower Limit +5°C)	76°F (24°C)
06	Lower Limit +11°F (Lower Limit +6°C)	77°F (25°C)
07	Lower Limit +12°F (Lower Limit +7°C)	78°F (26°C)
08	Lower Limit +14°F (Lower Limit +8°C)	80°F (27°C)
09	Lower Limit +16°F (Lower Limit +9°C)	82°F (28°C)
10	Lower Limit +18°F (Lower Limit +10°C)	84°F (29°C)

* In case of Standard Unit

(65) Heating Upper Limit for Setting Temperature (Fd)

This function is utilized to limit the highest setting temperature for HEAT operation.
When this function is valid, it provides the appropriate heating operation and energy saving.
The setting conditions and the heating upper limit for the setting temperature are as follows:

<Example>

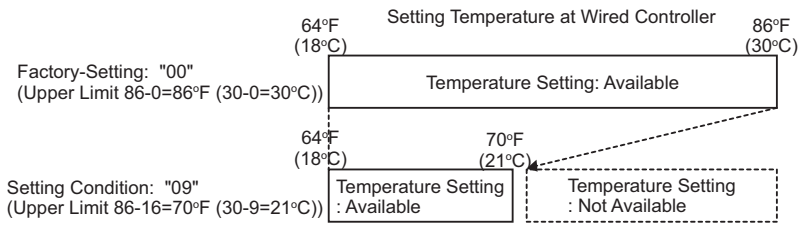

Setting Condition	Details	Setting Temperature Upper Limit (HEAT) *
00	Standard Value	86°F (30°C)
01	Upper Limit -2°F (Upper Limit -1°C)	84°F (29°C)
02	Upper Limit -4°F (Upper Limit -2°C)	82°F (28°C)
03	Upper Limit -6°F (Upper Limit -3°C)	80°F (27°C)
04	Upper Limit -8°F (Upper Limit -4°C)	78°F (26°C)
05	Upper Limit -9°F (Upper Limit -5°C)	77°F (25°C)
06	Upper Limit -10°F (Upper Limit -6°C)	76°F (24°C)
07	Upper Limit -12°F (Upper Limit -7°C)	74°F (23°C)
08	Upper Limit -14°F (Upper Limit -8°C)	72°F (22°C)
09	Upper Limit -16°F (Upper Limit -9°C)	70°F (21°C)
10	Upper Limit -18°F (Upper Limit -10°C)	68°F (20°C)
11	Upper Limit -20°F (Upper Limit -11°C)	66°F (19°C)
12	Upper Limit -22°F (Upper Limit -12°C)	64°F (18°C)

* In case of Standard Unit

(66) Not Prepared (FE)

(67) Not Prepared (FF)

(68) Not Prepared (H1)

(69) Indication of Hot Start (H2)

When this function is set as “No Indication” (01), “HOT-ST” is not indicated on the wired controller.

(70) Not Prepared (H3)

(71) Not Prepared (H4)

(72) Not Prepared (J1)

(73) Not Prepared (J2)

(74) Run Indicator Color (J3)

This function is utilized to set the run indicator color.

Setting Conditions	Color
00	Green
01	Red

NOTE:
The red run indicator is flashing during the alarm.

(75) Not Prepared (J4)

(76) Not Prepared (J5)

(77) Not Prepared (J6)

(78) Not Prepared (J7)

(79) Eco-operation (J8)

This function is utilized to effectively optimize the setting temperature and provide energy saving. When the setting temperature is changed during the air conditioning operation and while the operation is started/stopped by ON/OFF button on the wired controller, the set temperature automatically returns to (57/58) “Automatic Reset Temperature for Cooling/Heating (F5/F6)” as in the following figure. However, the setting temperature is not automatically reset in the case that “Automatic COOL/HEAT Operation” mode, or “Prohibiting Operation by Wired Controller” is set by the centralized controller.

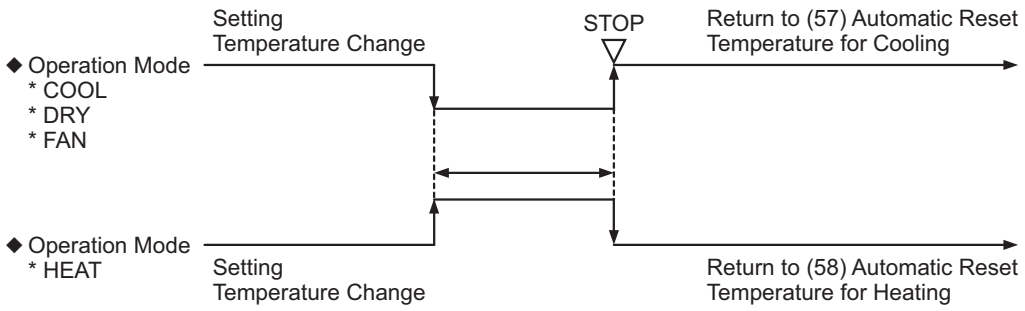

(80) Not Prepared (J9)

(81) Not Prepared (JA)

(82) Not Prepared (Jb)

(83) Not Prepared (K1)

(84) Not Prepared (K2)

(85) Not Prepared (K3)

(86) Not Prepared (K4)

(87) Motion Sensor Detection Level (K5)

This function is utilized to determine the amount of human activity depending on the reaction rate as in the following table.
When “HIGH” (01) is set, the threshold of the amount of human activity is smaller than the standard. As the result, the detection level of human sensor becomes higher.
When “LOW” (02) is set, the threshold of the amount of human activity is larger than the standard. As a result, the detection level of human sensor becomes lower.

Setting Conditions / Amount of Human Activity	00 (Factory Setting)	01	02
	Standard	High Sensitive	Low Sensitive
Extra Large	80% ≤ Reaction Rate	60% ≤ Reaction Rate	80% ≤ Reaction Rate
Large	30% ≤ Reaction Rate < 80%	20% ≤ Reaction Rate <60%	40% ≤ Reaction Rate < 80%
Small	3% < Reaction Rate < 30%	3% < Reaction Rate < 20%	3% < Reaction Rate < 40%
No Available	Reaction Rate ≤ 3%	Reaction Rate ≤ 3%	Reaction Rate ≤ 20%

(88) Operation Setting during Thermistor of Wired Controller or Remote Sensor (K6)

This function is utilized to change the function "Thermistor of Wired Controller / Remote Sensor (C8)" according to operation mode.

Setting Condition	Operation Mode
00	ALL
01	COOL / DRY
02	HEAT
03	same as "00"

NOTE:
All modes are available during automatic Cool/Heat operation mode.

(89) Radiation Temperature Correction (K7)

This function is utilized to correct the radiation temperature detected higher/lower than actual radiation temperature depending on the environment.

Setting Condition	Operation Mode
00 (Standard)	0°F (0°C)
01 (Upward)	+3°F (+2°C)
02 (Downward)	-3°F (-2°C)

(90) Control of Dew Condensation Prevention (K8)

Condensation may occur around air outlet during COOL / DRY operation with horizontal air flow and downward air flow for long time period.
This function is utilized to prevent condensation by moving the louver swing angle to the third step automatically for 30 minutes every 1 hour.

(91) Not Prepared (K9)

(92) Not Prepared (KA)

(93) Motion Sensor Installation Position (L1)

This function is utilized to select the installation position of the cover for corner with motion sensor and radiation temperature sensor by wired controller.

Setting Condition	Installation Position
00	A (Factory-Setting)
01	B
02	- (Not Available)
03	D

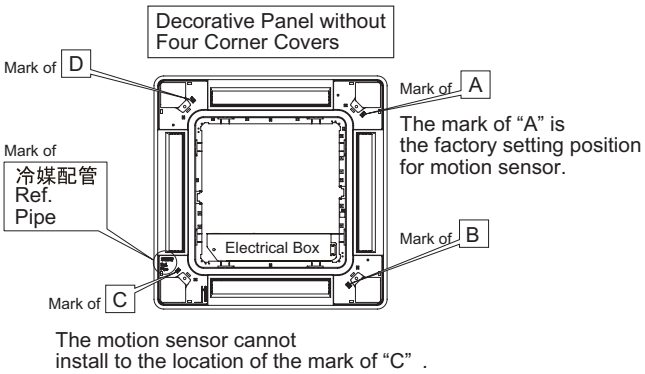

(94) Not Prepared (L2)

(95) Louver Setting during Energy-Saving Forced Thermo-OFF (L3)

Setting Condition	Energy-Saving Force Thermo-OFF
00 (Receive Air: LOW)	Louver stay in downward air flow position during Auto Swing Mode
01 (Receive Air: MED)	Louver stay in downward air flow position longer than "00" during Auto Swing Mode
02 (Receive Air: HIGH)	Louver is fixed at the 7th step of downward air flow
03 (Not Available)	Cancel the louver operation

(96) Fan Speed during Energy-Saving Forced Thermo-OFF (L4)

This function is utilized to increase the fan speed to prevent the deterioration of comfort due to force thermo-OFF for energy saving during cooling operation.

Setting Condition	Air Volume During Force Thermo-OFF			
Air Flow Volume	HIGH2	HIGH	MED	LOW
00 (Standard)	HIGH2	HIGH	MED	LOW
01 (Hi Speed)	HIGH2	HIGH2	HIGH	MED

(97) Louver Swing Operation during Energy-Saving Forced Thermo-OFF (L5)

This function is set at "01", the function "L3" setting will be available.

(98) Not Prepared (L6)

(99) Not Prepared (L7)

(100) Not Prepared (L8)

(101) Not Prepared (L9)

(102) Not Prepared (LA)

(103) Not Prepared (Lb)

(104) Setting Temperature (P1)

This function is utilized to provide setting temperature for every 1°F (0.5°C) at "00" and every 2°F (1°C) at "01".

Control differential of thermistor also uses the temperature for every 1°F (0.5°C) at "00" and every 2°F (1°C) at "01".

(105) Not Prepared (P2)

(106) Thermistor Selection (P3)

This function is utilized to select the thermistor with function (107).

Setting Condition	Thermistor (Sensor)
00	Inlet Air Thermistor
01	Outlet Air Thermistor
02	Thermistor of Remote Control
03	Remote Sensor

(107) Display of Thermistor Temperature (P4)
This function is utilized to display the temperature of the sensor selected at (106).

(108) Setting Temperature Display during Fan Operation (P5)
This function is utilized to undisplay the setting temperature during fan mode operation.

(109) ECO Button Operation (P6)
This function is prohibiting "ECO" button operation by setting at "01"

(110) Menu Button Operation (P7)
This function is utilized to invalidate the menu button.

(111) Not Prepared (P8)

(112) Not Prepared (P9)

(113) Not Prepared (PA)

(114) Not Prepared (Pb)

(115) Not Prepared (PC)

(116) Not Prepared (q1)

(117) Not Prepared (q2)

(118) Not Prepared (q3)

(119) Not Prepared (q4)

(120) Not Prepared (q5)

(121) Not Prepared (q6)

(122) Not Prepared (q7)

(123) Not Prepared (q8)

(124) Not Prepared (q9)

(125) Not Prepared (qA)

(126) Not Prepared (qb)

(127) Not Prepared (qC)

(128) Not Prepared (qd)

(129) Dual Setpoint (for Automatic COOL/HEAT Operation) (r1)
This function is utilized to activate/deactivate dual setpoint of cooling and heating in automatic cooling and heating operation.
This function is invalid when the function of "Automatic COOL/HEAT Operation" is invalid.

(130) Cooling/Heating Changeover Temperature (for Automatic COOL/HEAT Operation) (r2)
This function is utilized to change the indoor temperature condition to Thermo-ON/OFF.
This function is invalid when the function of "Dual Setpoint" is invalid.

In case dual setpoint is selected in automatic heating/cooling operation, during auto mode both cooling setpoint and heating setpoint can be selected.
By default, temperature when the heating/cooling mode changes are as follows.
Cooling mode changes to heating mode when the indoor temperature is heating setpoint -2°F (-1°C).
Heating mode changes to cooling mode when the indoor temperature is cooling setpoint +2°F (+1°C).

Setting Condition	Actual Control Temperature
00 (Standard)	2°F (1.0 °C)
01	3°F (1.5 °C)
02	3°F (2.0 °C)
03	4°F (2.5 °C)
04	5°F (3.0 °C)
05	1°F (0.5 °C)

(131) Setback Temperature Compensation (During card key removal, setpoint is setbacked) (r3)

This function is utilized to change the indoor temperature condition to Thermo-ON/OFF.
In case the setback operation is enabled and the card key is removed, setpoint is compensated and fan operate at “LOW” speed.

By default,
Cooling: Setpoint +4°F (+2.5°C)
Heating: Setpoint -4°F (-2.5°C)
When the external signal is detected (card key is inserted), return to the original setting temperature.

Compensation for setback operation can be changed as shown in the table below.

Setting Condition	Actual Control Temperature
00 (Standard)	Wired Controller Setting Temperature (Indicated Value) +4°F (2.5 °C)
01	Wired Controller Setting Temperature (Indicated Value) +5°F (3.0 °C)
02	Wired Controller Setting Temperature (Indicated Value) +6°F (3.5 °C)
03	Wired Controller Setting Temperature (Indicated Value) +7°F (4.0 °C)
04	Wired Controller Setting Temperature (Indicated Value) +8°F (4.5 °C)
05	Wired Controller Setting Temperature (Indicated Value) +9°F (5.0 °C)
06	Wired Controller Setting Temperature (Indicated Value) +10°F (5.5 °C)
07	Wired Controller Setting Temperature (Indicated Value) +1°F (0.5 °C)
08	Wired Controller Setting Temperature (Indicated Value) +2°F (1.0 °C)
09	Wired Controller Setting Temperature (Indicated Value) +3°F (1.5 °C)
10	Wired Controller Setting Temperature (Indicated Value) +3°F (2.0 °C)

(132) Not Prepared (r4)
(133) Not Prepared (r5)
(134) Not Prepared (r6)
(135) Not Prepared (r7)
(136) Not Prepared (r8)
(137) Not Prepared (r9)
(138) Not Prepared (rA)
(139) Not Prepared (rb)
(140) Not Prepared (S1)
(141) Not Prepared (S2)
(142) Not Prepared (S3)
(143) Not Prepared (S4)
(144) Not Prepared (S5)
(145) Not Prepared (S6)
(146) Not Prepared (S7)
(147) Not Prepared (S8)

5.5 Functions from Wired Controller

The functions are available from the wired controller CIW01 as follows.
Regarding setting procedure, refer to the “Operation Manual” for the Wired Controller.

5.5.1 Power Saving Function

NOTE:
The following functions (1)~(3) cannot be operated at the same time.

(1) Outdoor Unit Capacity Control
The demand function setting can be controlled from wired controller. Select from “Peak Cut Control” and “Moderate Control” according to the situation.

< “Peak Cut Control” Function >

The peak cut control reduces the power consumption range when it exceeds the value of the power saving setting.

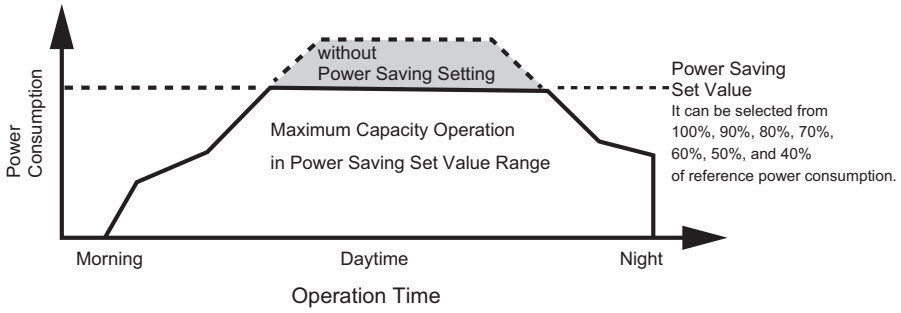

NOTES:
1. The power set value (%) is just a criterion. The power set value for this function is different from the actual power value in precision. Use the demand controller (option) when it is necessary to manage the maximum power correctly.
2. The cooling capacity will be decreased according to the power saving setting value for the reducing of compressor motor revolution.
3. The actual electrical power consumption may be higher than the value displayed on the screen under certain operating condition such as protective control.
4. This function is used to inhibit power consumption of the operating. Do not use it for minimize the capacity of current and the voltage for the power circuit, power supply wiring, GFCI, transformer, etc. It may cause actuation of interrupter and equipment fault.
5. Power consumption depends on connected outdoor unit.

< “Moderate Control” Function >

The moderate control moderate the air conditioning capacity not to exceed the value of the power saving setting.

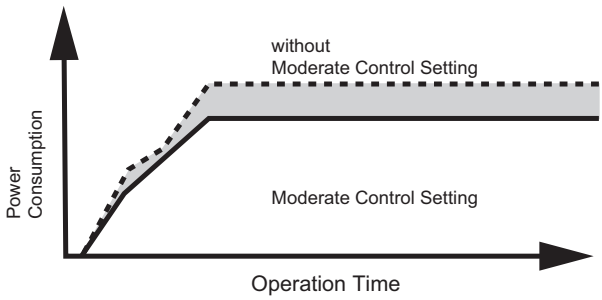

NOTES:
1. The moderate control setting value can be set from 40% to 100% of regular capacity by every 10%.
2. The setting value is just a criterion. It might be different according to the actual service condition and operating condition.

(2) Rotation Control Function
The rotation control switches multiple indoor unit operating mode to FAN mode (Thermo-OFF) in order one by one.

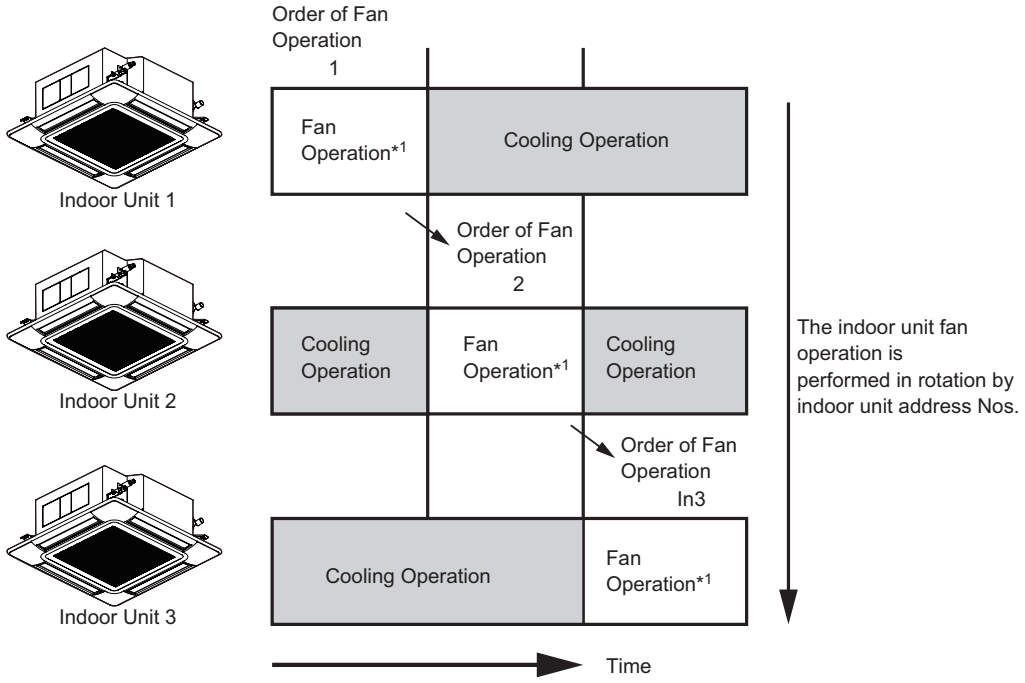

NOTES:
1. The fan mode time can be selected in the interval of three minutes, five minutes and ten minutes.
2. It is possible to change the rotation assigned number according to the minimum differential between the setting temperature and indoor temperature.

(3) Intermittent Control Function
The intermittent control repeats Cooling/Heating and Fan (Thermo-OFF) mode in fixed intervals.

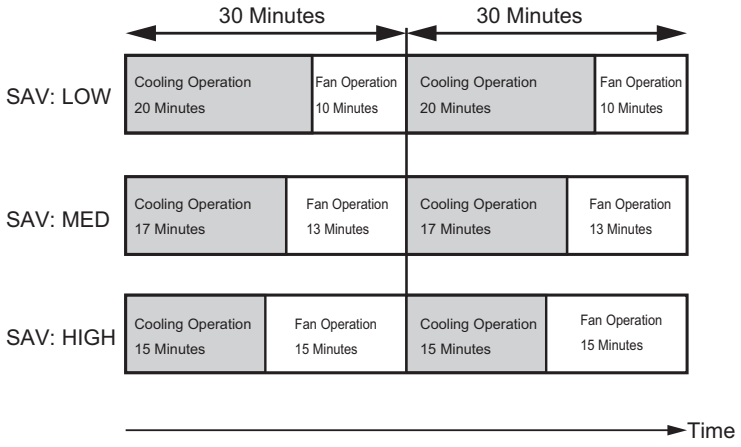

NOTE:
The fan mode will be repeated in the interval of five minutes (SAV: LOW), ten minutes (SAV: MED) and fifteen minutes (SAV: HIGH) during heating operation.

5.5.2 Schedule Function

(1) Power Saving Schedule Function
The power saving schedule function is utilized to set the power saving schedule on indoor unit capacity control and intermittent control up to five settings a day each day of the week.

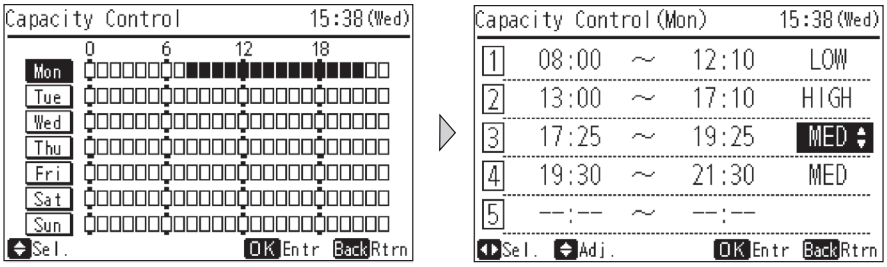

The display of Noise Reduction Schedule is the same.

(2) Operation Noise Reduction Schedule Function
The operation noise reduction schedule function is utilized to set the operation noise reduction schedule up to five settings a day each day of the week.

NOTE:
The operation noise reduction setting may decreases the Cooling/Heating capacity.
For detail, refer to Section “Sound Reduced Function” in the "Service Manual" for the outdoor unit.

5.5.3 Indication Function

(1) Power Consumption Display Function
This function displays the power consumption of the outdoor unit compressor. The value of each displayed in Graph/List format is one day, one week and one year. The display period of consumption comparison can be selected from one day before/Today to 1 year ago/This year.

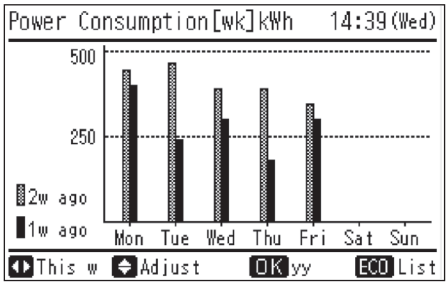

NOTE:
The power consumption for outdoor unit compressor will be displayed.

(2) Power Saving Guide
Press “ECO” button then the power saving guide will be displayed to support the setting. Easy access to the confirmation and setting screen from the current setting status screen.

5.5.4 Comfort Function

Following functions are not available depending on connected outdoor unit.

(1) Quick Function

This function is used when decreasing/increasing the indoor temperature quickly.
This function operates as follows for 30 minutes from the operation start-up.

This function is only available when the operation mode is COOL or HEAT.
The unit will start each time in quick mode until the setting is canceled.

Setting Condition	Compressor Frequency			Indoor Fan
	Upper Limit	Target Frequency	Variation Width	
Default Setting	-	-	-	-
COOL	Default Setting +20%	Default Setting +20%	Default Setting +200%	Automatically
HEAT	Default Setting +20%	Default Setting +20%	Default Setting +50%	-

NOTES:

1. If this function is set, indoor fan speed is automatically controlled regardless fan speed setting from wired controller. (If there is an upper/lower limit of airflow, do not use this function.)
   In case of Ducted (EconoFresh), do not use this function. If it is used for Ducted (EconoFresh), the thermal load of the room may significantly increase depending on the outdoor temperature conditions.
2. The upper limit and target frequency of the compressor are same as Function Setting “Hc” or “Hh”.
3. This function may increase power consumption.

(2) Power Up Setting

If the cooling/heating capacity seems insufficient during the normal operation, set this function.
By setting this function, the target frequency and upper limit of the compressor are set higher as follows.

Setting Condition	Power Up Mode			
	Compressor Frequency for Cooling Operation		Compressor Frequency for Heating Operation	
	Upper Limit	Target Frequency	Upper Limit	Target Frequency
0 (Default Setting)	-	-	-	-
1	Default Setting +20%	Default Setting +20%	-	-
2	-	-	Default Setting +20%	Default Setting +20%
3	Default Setting +20%	Default Setting +20%	Default Setting +20%	Default Setting +20%

NOTE:

The upper limit and target frequency of the compressor are same as Function Setting “Hc” or “Hh”.

6. Field Work Instructions

Refer to Section 3 “Troubleshooting” when dealing with problems or difficulties.
If you cannot solve the problem, contact your distributor or contractor.

6.1 Caution for Refrigerant Leakage

- Special Attention Regarding Refrigerant Gas Leakage
  Make sure that the entire VRF system meets ASHRAE Standard 15 or, any local codes, regarding Safety. The ASHRAE Standard 15 provides safeguards for life, limb, health, and property, and prescribes safety requirements.
  The standard is recognized as the main guide for personal safety involving refrigeration systems. It strives to ensure a safe application of refrigerant systems by limiting the maximum charge so that a complete discharge due to a leak into a small, occupied, and enclosed room can never exceed the allowable limit.

6.2 Modifications of Charging Refrigerants Other than Those Specified by Johnson Controls

⚠ DANGER

Johnson Controls' air conditioners are designed and manufactured based on using specified refrigerants. The applicable refrigerants are specified for each unit's models.

Using any refrigerants besides the specified refrigerants may cause mechanical problems, malfunction, and failure, and **in the worst case, it endangers safety seriously and may cause a fire or an explosion.**
Therefore, **Do not charge non-specified refrigerants or any of the following in the refrigerant system of a unit.**

*** Hydrocarbon Refrigerants such as Propane**
*** Oxygen, or Flammable Gases such as Acetylene**
*** Poisonous Gases**

The types of refrigerants are indicated in the Installation and Maintenance Manuals, Engineering Manuals, Service Manuals, and the specification label for each unit. **Be aware that Johnson Controls does not take any responsibility for unit failure, malfunction, or any accidents caused by charging non-specified refrigerants or others as noted above.**

6.3 Maintenance Work

(1) For Outdoor Unit and Indoor Unit

(a) Fan and Fan Motor
- Lubrication - All fan motors are pre-lubricated and sealed at the factory. Therefore, no lubricating maintenance is required.
- Sound and Vibration - Inspect for abnormal sounds or vibration.
- Rotation - Check that the fan rotates counterclockwise and inspect the rotating speed.
- Insulation - Inspect for electrical insulation resistance.

(b) Heat Exchanger
- Clogging - Inspect for any accumulated dirt and dust and remove any at regular intervals. As for an outdoor unit, other obstacles such as growing grass and pieces of paper, which might intercept air flow, should also be removed.

(c) Piping Connection
- Leakage - Inspect for refrigerant leakage at piping connections.

(d) Cabinet
- Stain and Lubricant - Inspect for any stain or lubricant and remove it, if any.
- Securing Screw - Inspect for loose or missing screws and secure or replace as required.
- Insulation - Inspect for peeling thermal insulation material on the cabinet and repair it, if any.

(e) Electrical Equipment
- Activation - Inspect for abnormal activation of the magnetic contactor, auxiliary relay, or printed circuit board (PCB).
- Line Condition - Pay attention to working voltage, amperage and phase balance.
  Inspect for faulty contact caused by loosened terminal connections, oxidized contacts, foreign matter, and other items. Inspect for electrical insulation resistance.

(f) Control and Protective Devices
- Setting - Do not readjust the setting in the field.

(2) For Outdoor Unit Only

(a) Compressor
- Sound and Vibration - Inspect for abnormal sounds or vibration.
- Activation - Check that the voltage drop of the power supply line is within 16% at start and within 2% during operation.

(b) Reversing Valve
- Activation - Inspect for any abnormal activating sound.

(c) Strainer
- Clogging - Check that there is no temperature difference between the ends.

(d) Ground Wiring
- Ground Line - Inspect for continuity to the earth ground.

(e) Crankcase Heater
- Activation - Apply power to the outdoor unit(s) at least 12 hours prior to operation of the system for preheating of the compressor oil.

(3) For Indoor Unit Only

(a) Air Filter
- Cleaning - Inspect for, and remove, any accumulated dirt and dust and remove according to the “Engineering Manual”.

(b) Condensate Pan, Drain-up Mechanism and Condensate Pipe
- Condensate Line - Inspect and clean the condensate line at least twice a year.
- Drain-up Mechanism - Inspect for activation of drain-up mechanism.

(c) Float Switch
- Activation - Inspect for activation of float switch.

6.4 Service and Maintenance Record by 7-Segment Display

Refer to the Service Manual for Outdoor Unit.

6.5 Service and Maintenance Record by Wired Controller

Data Sheet for Checking by Wired Controller

Time				:	:	:	:	:
I.U. Model								
I.U. Serial No.								
I.U. No. / Alarm Code								
		Check Mode 1	Check Mode 2	1 • 2	1 • 2	1 • 2	1 • 2	1 • 2
B	Temp. Indication							
	Set Temp.	b1	- -					
	Inlet Air Temp.	b2	q1					
	Discharge Air Temp.	b3	q2					
	Liquid Pipe Temp.	b4	q3					
	Remote Thermistor Temp.	b5	- -					
	Outdoor Air Temp.	b6	q4					
	Gas Pipe Temp.	b7	q5					
	Evaporating Temp. at Heating	b8	q6					
	Condensing Temp. at Cooling	b9	q7					
	Comp. Top Temp.	bA	q8					
	Thermo Temp. of Wired Controller	bb	- -					
	Not Prepared	bC	- -					
C	Micro-Computer State Indication							
	I.U. Micro-Computer	C1	- -					
	O.U. Micro-Computer	C2	- -					
D	Stopping Cause State Indication							
	Cause Code of Indoor Unit Stoppage	d1	- -					
E	Alarm Occurrence							
	Times of Abnormality	E1	- -					
	Times of Power Failure	E2	- -					
	Times of Abnormal Communication	E3	- -					
	Times of Inverter Tripping	E4	- -					
F	Automatic Louver State							
	Louver Sensor State	F1	- -					
H	Pressure, Frequency State Indication							
	Discharge Pressure	H1	q9					
	Suction Pressure	H2	qA					
	Control Information	H3	qb					
	Operating Frequency	H4	qC					
J	I.U. Capacity Indication							
	I.U. Capacity	J1	- -					
	O.U. Code	J2	- -					
	Refrigerant System Number	J3	- -					
	Refrigerant System Number	J4	- -					
L	Opening of Expansion Valve							
	I.U. Expansion Valve	L1	qd					
	O.U. Expansion Valve 1	L2	qE					
	O.U. Expansion Valve 2	L3	- -					
	O.U. Expansion Valve B	L4	- -					

NOTE:
Refer to Section 3.1.4 “Checking Wired Controller” for items of check mode.

P	Compressor Condition Indication (Reference)							
	Comp. Current	P1	qF					
	Accumulated Operation Time of Comp.	P2	- -					
Q	Sensor Condition Indication							
	Motion Sensor Response Rate	q1	- -					
	Radiation Sensor Temp.	q2	- -					
	Motion Sensor1 Response Rate	q3	- -					
	Motion Sensor2 Response Rate	q4	- -					
	Motion Sensor3 Response Rate	q5	- -					
	Motion Sensor4 Response Rate	q6	- -					
	Setting Temp. Collected Value	q7	- -					

Client:

Installation Date:

System No.:

Date Checked:

Checked by:

Result	

NOTE:
Refer to Section 3.1.4 “Checking Wired Controller” for items of check mode.

6.6 Service and Maintenance Record

Service and Maintenance Record

No.	Check Item	Action	Judgment
1	Is service space sufficient?		YES or NO
2	Short Circuit of Discharged Air?		YES or NO
3	Any Heat Influence?		YES or NO
4	Is ground wiring connected?		YES or NO
5	Refrigeration Piping		GOOD or NOT GOOD
6	Fixing of Units		GOOD or NOT GOOD
7	Any Damage on External or Internal Surface?		YES or NO
8	Checking of Screws and Bolts	Tighten them if they are loosened.	TIGHTENED or NOT TIGHTENED
9	Tightening of Terminal Screws	Tighten all terminal screws with a Phillips screwdriver.	TIGHTENED or NOT TIGHTENED
10	Are compressor terminals tightly fixed?	Check all compressor terminals are tightly fixed.	GOOD or NOT GOOD
11	Insulation Resistance	Measure insulation resistance with insulation resistance-meter. Comp. and Fan Motor: greater than 3MΩ Others: greater than 3MΩ	GOOD or NOT GOOD
12	Does condensate water smoothly flow?	Check for smooth flow by pouring water.	GOOD or NOT GOOD
13	Check for leakage at compressor.	Check for any leakage.	GOOD or NOT GOOD
14	Check for leakage at outdoor heat exchanger.	Check for any leakage.	GOOD or NOT GOOD
15	Check for leakage at indoor heat exchanger.	Check for any leakage.	GOOD or NOT GOOD
16	Check for leakage at reversing valve.	Check for any leakage.	GOOD or NOT GOOD
17	Check for leakage at check valve.	Check for any leakage.	GOOD or NOT GOOD
18	Check for leakage at accumulator.	Check for any leakage.	GOOD or NOT GOOD
19	Check for leakage at strainer.	Check for any leakage.	GOOD or NOT GOOD
20	Check for leakage at electronic expansion valve.	Check for any leakage.	GOOD or NOT GOOD
21	Check for leakage at piping.	Check for any leakage.	GOOD or NOT GOOD
22	Check direction of fans.	by Viewing or Airflow Volume	GOOD or NOT GOOD
23	Voltage among each phase.	Check the voltage is within the specified range.	GOOD or NOT GOOD
24	Vibration and Sound	Check fan, compressor, piping.	GOOD or NOT GOOD
25	Activation of Each Operation Mode	Check activation of COOL, HEAT, STOP and TEMP. switches.	GOOD or NOT GOOD
26	High Pressure Cut-out Switch	Check actual activation value.	GOOD or NOT GOOD
27	Check activation of drain-up mechanism.	Check it during cooling operation.	GOOD or NOT GOOD
28	Indoor Inlet Air Temp. (DB/WB)		°F DB/ °F WB
29	Indoor Outlet Air Temp. (DB/WB)		°F DB/ °F WB
30	Outdoor Inlet Air Temp. (DB/WB)		°F DB/ °F WB
31	Outdoor Outlet Air Temp. (DB/WB)		°F DB/ °F WB
32	High Pressure Sensor		psi(G)
33	Low Pressure Sensor		psi(G)
34	Operating Voltage		V
35	Operating Current		A
36	Instruction for Cleaning of Air Filter to Client		DONE or NOT YET
37	Instruction for Cleaning Method to Client		DONE or NOT YET
38	Instruction for Operation to Client		DONE or NOT YET

6.7 Saturation Curve for Refrigerant

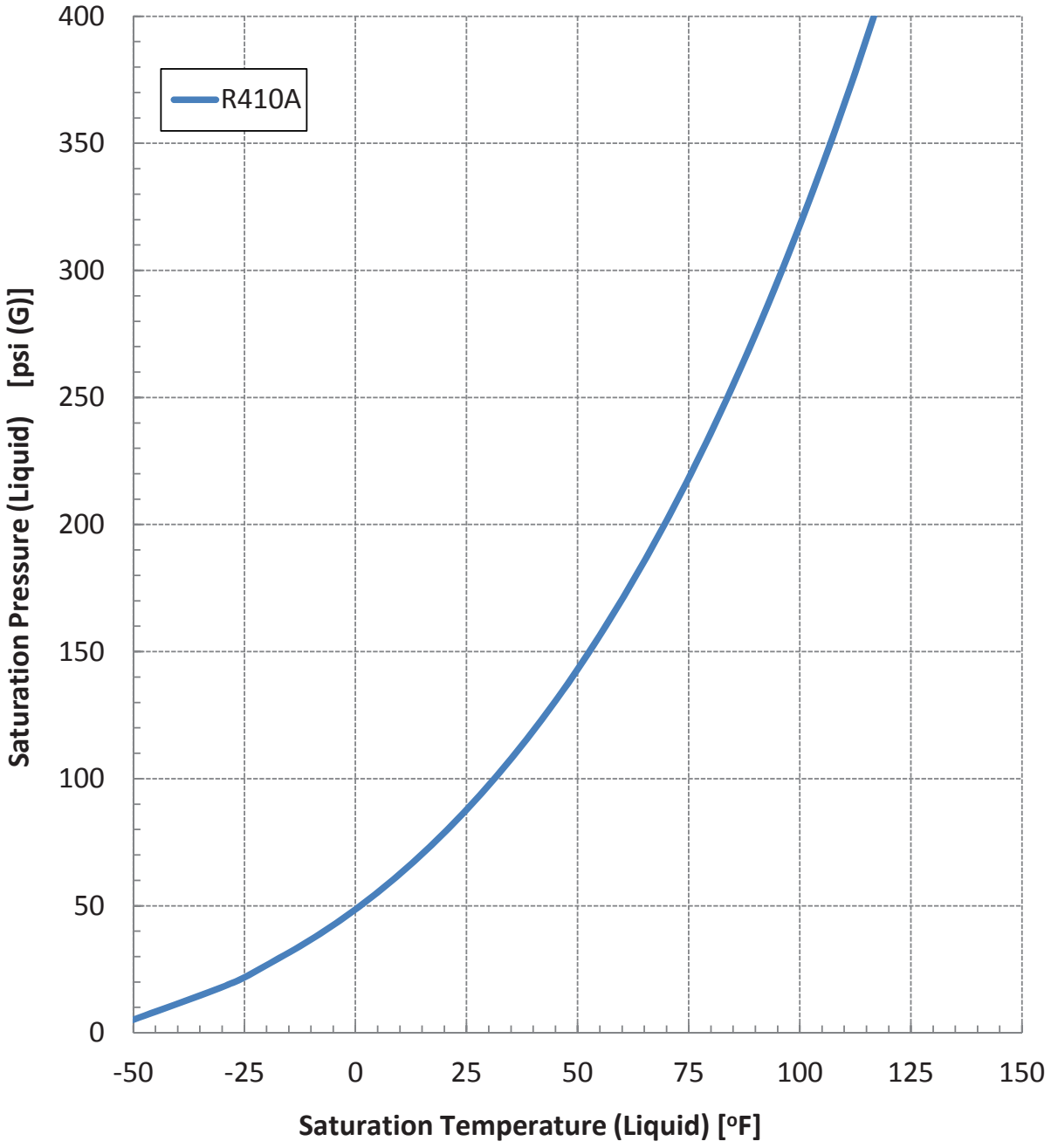

6.8 Mollier Chart for R410A

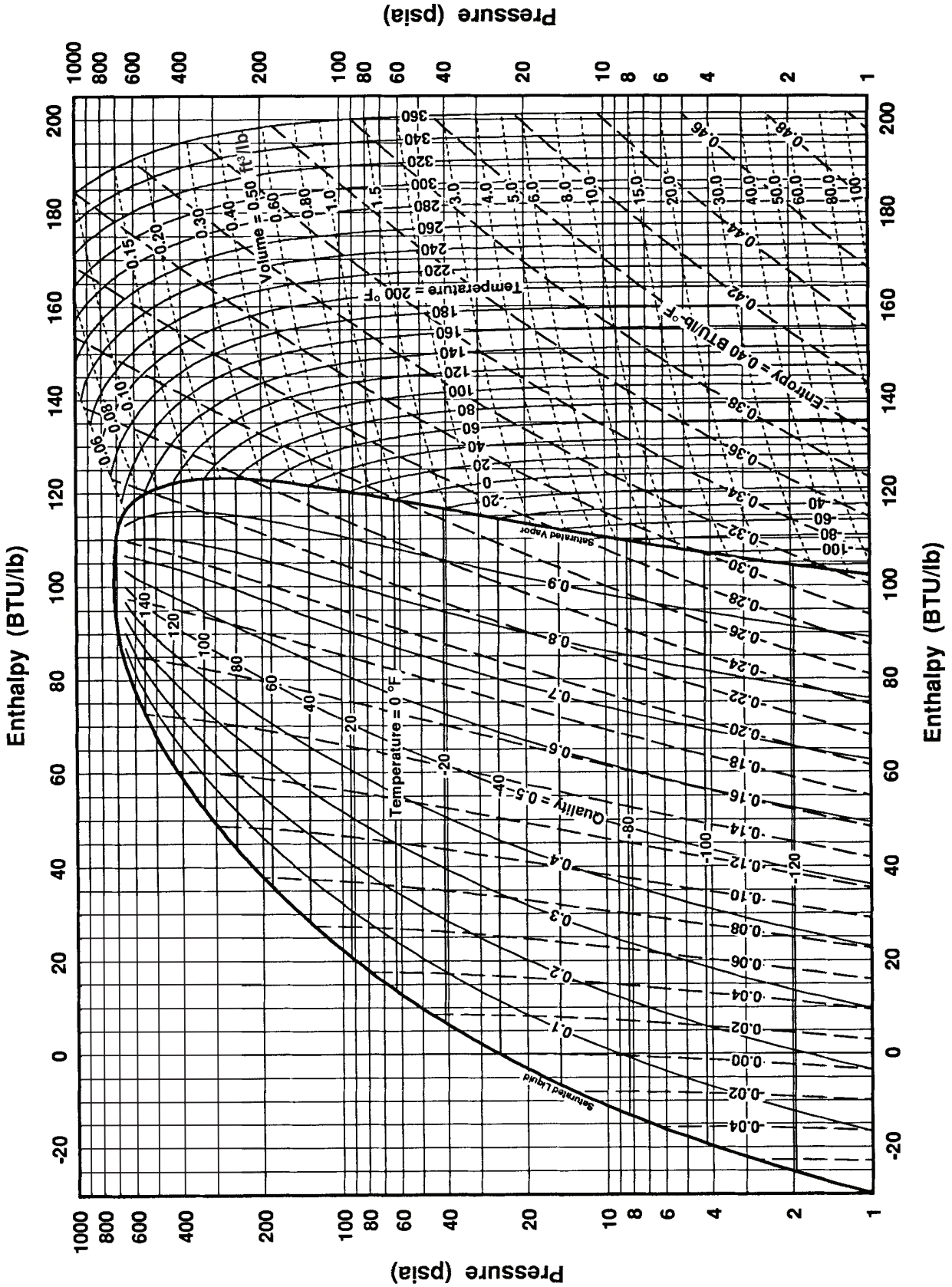

7. Service Parts List

Refer to the Service Parts List for Mini Cassette.

Important Notices about Indoor Units Produced in September 2019 or Later

3. Troubleshooting

3.1 Initial Troubleshooting

3.1.3 Checking Rotary Switch and DIP Switch Settings (Continued)

The control PCB for the following models is changed and layout of rotary switch and DIP switch settings are changed.

4-Way Cassette [(H,Y,C)IC4008 to 048B21S]
2-Way Cassette [(H,Y,C)IC2018, 024B21S]
1-Way Cassette [(H,Y,C)IC1006 to 015B21S]
4-Way Cassette Mini [(H,Y,C)ICM008 to 018B21S]
Ceiling Suspended [(H,Y,C)ICS015 to 036B21S]

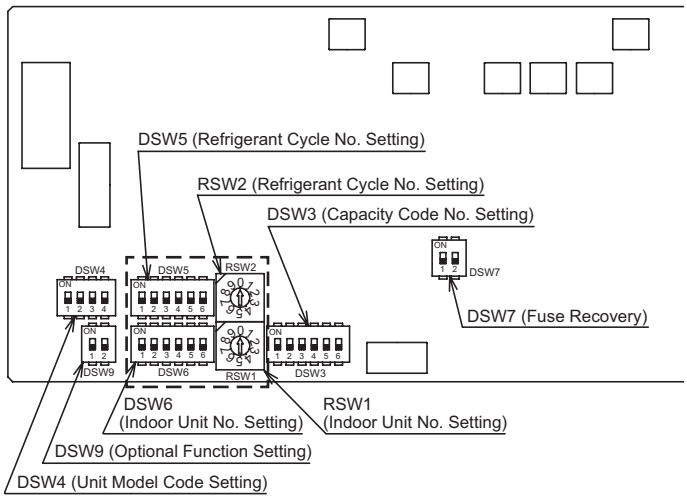

Produced in August 2019 or Earlier	Produced in September 2019 or Later
Arrangement of Rotary Switch and DIP Switch Refrigerant Cycle No. Setting (Yellow) DSW5 RSW2 DSW6 RSW1 Unit No. Setting (Red)	Arrangement of Rotary Switch and DIP Switch Refrigerant Cycle No. Setting (Yellow) DSW5 RSW1 DSW6 RSW2 Unit No. Setting (Red)
Unit No. Setting (RSW1 and DSW6) DSW6 (Tens Digit): 1 2 3 4 5 6 ON OFF RSW1 (Units Digit): Setting Position — Set by inserting slotted screwdriver into the groove. Ex.) Set at No.16 Unit: DSW6 1 2 3 4 5 6 ON OFF, Set No.1 Pin at ON side; RSW1 Set at "6" Before shipment, DSW6 and RSW1 are set at "0". For the units supporting H-LINK II, the unit No. can be set for Max. 64 indoor units (No.0~63).	Unit No. Setting (RSW2 and DSW6) DSW6 (Tens Digit): 1 2 3 4 5 6 ON OFF RSW2 (Units Digit): Setting Position — Set by inserting slotted screwdriver into the groove. Ex.) Set at No.16 Unit: DSW6 1 2 3 4 5 6 ON OFF, Set No.1 Pin at ON side; RSW2 Set at "6" Before shipment, DSW6 and RSW2 are set at "0". For the units supporting H-LINK II, the unit No. can be set for Max. 64 indoor units (No.0~63).
Refrigerant Cycle No. Setting (RSW2 and DSW5) DSW5 (Tens Digit): 1 2 3 4 5 6 ON OFF RSW2 (Units Digit): Setting Position — Set by inserting slotted screwdriver into the groove. Ex.) Set at No.5 Cycle: DSW5 1 2 3 4 5 6 ON OFF, Set All Pins OFF; RSW2 Set at "5" Before shipment, DSW5 and RSW2 are set at "0". For the units supporting H-LINK II, the ref. cycle No. can be set for Max. 64 cycles. (No. 0~63)	Refrigerant Cycle No. Setting (RSW1 and DSW5) DSW5 (Tens Digit): 1 2 3 4 5 6 ON OFF RSW1 (Units Digit): Setting Position — Set by inserting slotted screwdriver into the groove. Ex.) Set at No.5 Cycle: DSW5 1 2 3 4 5 6 ON OFF, Set All Pins OFF; RSW1 Set at "5" Before shipment, DSW5 and RSW1 are set at "0". For the units supporting H-LINK II, the ref. cycle No. can be set for Max. 64 cycles. (No. 0~63)

3.2 Troubleshooting Procedures

3.2.2 Troubleshooting Using Alarm Codes (Continued)

Alarm Code 19	Activation of Protection Device for Indoor Fan Motor (Continued)

Control PCB for the following models are changed.

4-Way Cassette [(H,Y,C)IC4008 to 048B21S]
2-Way Cassette [(H,Y,C)IC2018, 024B21S]
1-Way Cassette [(H,Y,C)IC1006 to 015B21S]
4-Way Cassette Mini [(H,Y,C)ICM008 to 018B21S]
Ceiling Suspended [(H,Y,C)ICS015 to 036B21S]

Arrangement of Connectors and Check Points for Control PCB1 (PI153)

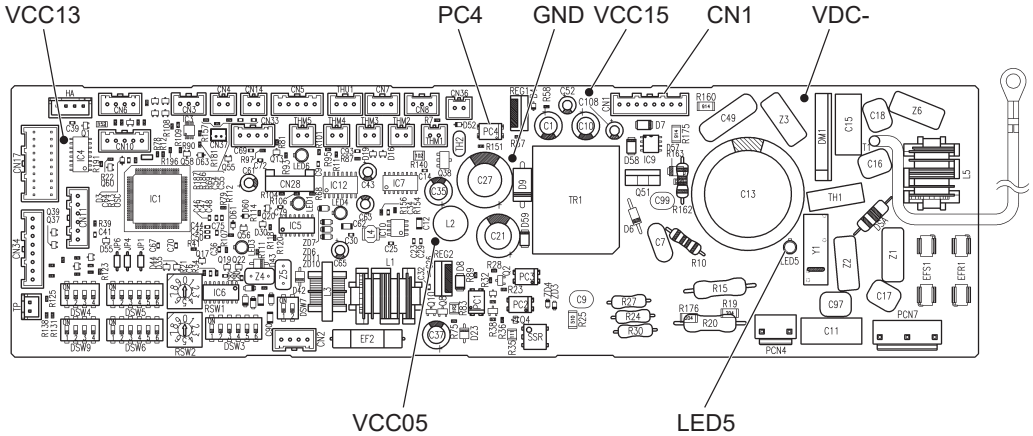

4. Maintenance

4.4 Main Parts

4.4.3 for Indoor Units

4.4.3.1 Printed Circuit Board (Continued)

Control PCB for the following models are changed.

4-Way Cassette [(H,Y,C)IC4008 to 048B21S]
2-Way Cassette [(H,Y,C)IC2018, 024B21S]
1-Way Cassette [(H,Y,C)IC1006 to 015B21S]
4-Way Cassette Mini [(H,Y,C)ICM008 to 018B21S]
Ceiling Suspended [(H,Y,C)ICS015 to 036B21S]

Arrangement of Connectors and Check Points for Control PCB1 (PI153)

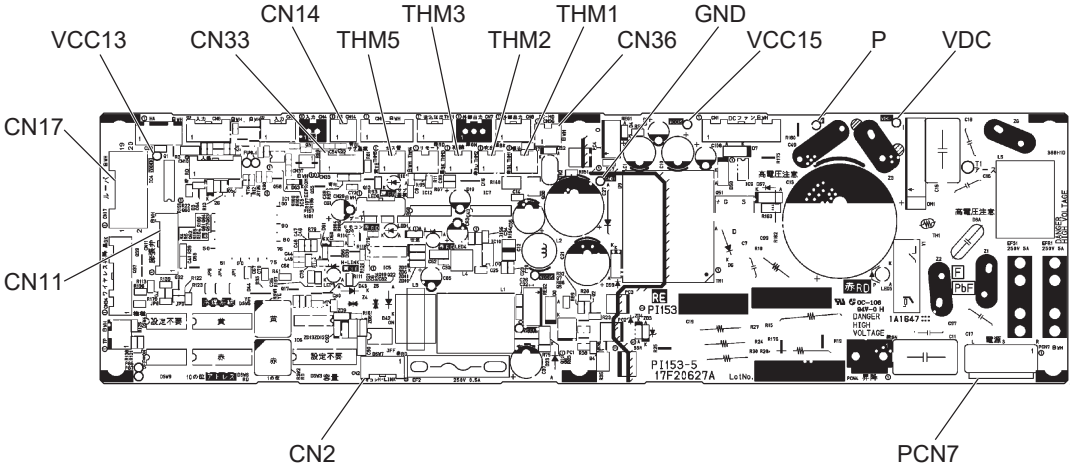

5. External Input/Output and Function Setting

5.4 External Input/Output and Function Setting Mode for Indoor Unit

5.4.1 External Input and Output Settings (Continued)

Non-Ducted Type	Ducted Type
4-Way Cassette [(H,Y,C)IC4008 to 048B21S]	Ducted High Static [(H,Y,C)IDH015 to 054B22S]
2-Way Cassette [(H,Y,C)IC2018, 024B21S]	Ducted Medium Static [(H,Y,C)IDM006 to 054B22S]
1-Way Cassette [(H,Y,C)IC1006 to 015B21S]	Ducted High Static [(H,Y)IDH018 to 096B21S]
4-Way Cassette Mini [(H,Y,C)ICM008 to 018B21S]	Ducted Medium Static [(H,Y)IDM006 to 048B21S]
Ceiling Suspended [(H,Y,C)ICS015 to 036B21S]	Ducted Slim [(H,Y)IDS006 to 018B21S]
Wall Mount [TIWM006 to 030B22S]	EconoFresh [(H,Y,C)IDM030 to 048B21E]
Floor-Exposed [(H,Y,C)IFE006 to 015B21S]	
Floor-Concealed [(H,Y,C)IFC006 to 015B21S]	
DX-Kit for UPG VAH (Vertical Air Handler) [EXV-018 to 060E]	

5.4.1.7 Setback Operation by External Input

This function is used to identify occupied/unoccupied rooms by means of a card key in/out. This function keeps the unoccupied room (the card key is out) as comfortable as when the room is occupied (the card key is in).
To enable the function, the function selection and input on the wired controller are required.
Refer to Section 5.4 “External Input/Output and Function Setting Mode for Indoor Unit” for function selection, and below procedures and Table 5.2 “Specifications on Required Component for Setback Operation” for input.

This function may not be available depending on the software of indoor unit and wired controller.
Refer to Section 5.4.2.1 “Function Selection Item”.

< “Input” in Setback Mode >

1. Press and hold “Menu” and “Back/Help” on the wired controller simultaneously for at least 3 seconds during the normal mode (unit stoppage). The “Test Run” menu is displayed.
   Select “Input/Output” from the “Test Run” menu and press “OK”.
2. Select either “Input 1” or “Input 2” and change the setting to “09”.
3. Build a circuit as shown below.
   On the indoor unit PCB, use the input terminal (CN3) to receive external signals.

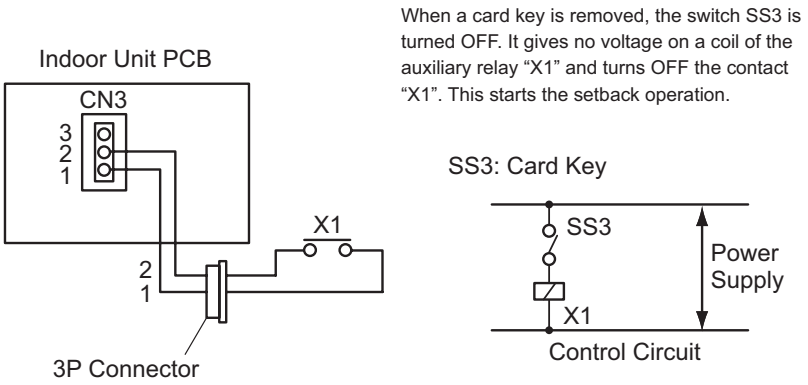

Wiring Diagram Example of Setback Operation by External Input
(Example: Card Key Input is set to terminals 1 and 2 of CN3)

NOTES:

1. After a power supply is turned ON, picking up a signal is not available for 10 seconds due to the initialization of the component.
2. A wired controller is required for this function.
   When using a wireless controller, or not using a wired controller, the function does not work.
3. To simultaneously apply constraints of the setback operation to multiple IDUs, connect to the wired controller and enter a signal to the representative unit in the setback.

Table 5.2 Specifications on Required Components for Setback Operation

Component		Specifications	Remarks
Change-Over Switch (SS3)		Manual Switch, Card Key	208/230V
Auxiliary Relay (X1) *		OMRON Mini-Power Relay Model: MY2F or Equivalent	
3 Pin Connector Cable *		Optional Part PCC-1A (Connected to JST Connector, XARP-3)	Five Cable with Connectors as One Set
Electrical Wiring (Inside of Unit)	Low Voltage	AWG22	lower than 24V
	208/230V	AWG18-20	-
Electrical Wiring (Outside of Unit)	Low Voltage	AWG18-20	lower than 24V
	208/230V	AWG14	-

* These parts are compatible with a field-supplied Relay and 3 Pin Connector Kit PSC-5RA.

NOTES:

1. Make the CN3 wires as short as possible. Do not install the wires along the 208/230V power line. Install them more than 12 inches (30cm) away from each other. (Intersecting them is acceptable.) If the wires are installed along the power line, comply with the following points to prevent noise.
   a. Pass either the low voltage wire and 208/230V power line through a metal conduit tube, and ground one end.
   b. Use a shielded wire for a low voltage wire and ground one end. The maximum wiring length is 230 ft. (70m).
2. Since automatic operation by wired controller is an unattended operation, as a safety matter, explain the necessity of electric leakage breaker or smoke director near IDU besides monitoring by Section 5.4.1.6 (2) “Picking Up Alarm Signal”.

5.4.2 Function Setting

5.4.2.1 Function Selection Item (Continued)

Non-Ducted Type	Ducted Type
4-Way Cassette [(H,Y,C)IC4008 to 048B21S]	Ducted High Static [(H,Y,C)IDH015 to 054B22S]
2-Way Cassette [(H,Y,C)IC2018, 024B21S]	Ducted Medium Static [(H,Y,C)IDM006 to 054B22S]
1-Way Cassette [(H,Y,C)IC1006 to 015B21S]	Ducted High Static [(H,Y)IDH018 to 096B21S]
4-Way Cassette Mini [(H,Y,C)ICM008 to 018B21S]	Ducted Medium Static [(H,Y)IDM006 to 048B21S]
Ceiling Suspended [(H,Y,C)ICS015 to 036B21S]	Ducted Slim [(H,Y)IDS006 to 018B21S]
Wall Mount [TIWM006 to 030B22S]	EconoFresh [(H,Y,C)IDM030 to 048B21E] (**5)
Floor-Exposed [(H,Y,C)IFE006 to 015B21S]	
Floor-Concealed [(H,Y,C)IFC006 to 015B21S]	
DX-Kit for UPG VAH (Vertical Air Handler) [EXV-018 to 060E]	

No.	Items	Optional Function	Individual Setting	Setting Condition	Contents
101	L9	Auxiliary Heater at Defrosting Operation	○	00 01	Heater ON Heater OFF
116	q1	Auxiliary Heater Setting	×	00 01	Not Available Available
117	q2	Auxiliary Heater ON Compensation (for Auxiliary Heater Setting)	×	-3(-1.5) -4(-2.5) -5(-3.0) -6(-3.5) -7(-4.0) -8(-4.5) -9(-5.0) -1(-0.5) -2(-1.0)	-3°F (-1.5°C) -4°F (-2.5°C) -5°F (-3.0°C) -6°F (-3.5°C) -7°F (-4.0°C) -8°F (-4.5°C) -9°F (-5.0°C) -1°F (-0.5°C) -2°F (-1.0°C)
118	q3	Auxiliary Heater OFF Compensation (for Auxiliary Heater Setting)	×	0(0.0) 1(0.5)	0°F (0.0°C) 1°F (0.5°C)
119	q4	Ambient Temperature Restriction Setpoint (**1) (for Auxiliary Heater Setting)	×	-4(-20.0) 2(-17.0) 8(-13.0) 14(-10.0) 20(-7.0) 26(-3.0) 32(0.0) -13(-25.0) -8(-22.0)	-4°F (-20.0°C) 2°F (-17.0°C) 8°F (-13.0°C) 14°F (-10.0°C) 20°F (-7.0°C) 26°F (-3.0°C) 32°F (0.0°C) -13°F (-25.0°C) -8°F (-22.0°C)
120	q5	Ambient Temperature Restriction Setpoint Compensation (**1) (for Auxiliary Heater Setting)	×	4(2.5) 5(3.0) 6(3.5) 1(0.5) 2(1.0) 3(1.5)	4°F (2.5°C) 5°F (3.0°C) 6°F (3.5°C) 1°F (0.5°C) 2°F (1.0°C) 3°F (1.5°C)
121	q6	Switching Type of Auxiliary Heater (**2, **3, **4)	×	00 00 01	Not Available (For Non-Ducted Type) Duct Heater (For Ducted Type) Baseboard Heater
122	q7	Emergency Heater Control	×	00 01	Available Not Available

No.	Items	Optional Function	Individual Setting	Setting Condition	Contents
126	qb	Mode with Setback	×	00 01 02 03	Not Available Cooling only Heating only Heating & Cooling
127	qC	Temperature Difference during Setback Operation	×	00 01 02 03 04	3°F (2.0°C) 5°F (3.0°C) 7°F (4.0°C) 9°F (5.0°C) 2°F (1.0°C)
128	qd	Minimum Setback (Stop) Time	×	00 01 02 03 04 05 06 07 08 09 10 11	10 min. 20 min. 30 min. 40 min. 50 min. 60 min. 70 min. 80 min. 90 min. 100 min. 110 min. 120 min.
128a	qE	Setback Mode	×	00 01 02 03	Always Input Schedule Manual
128b	qF	Operation State after Terminating Setback Operation	×	00 01 02	Stop Run State before Setback Operation
137	r9	Wired Controller Prohibit Function while Setback Operation	×	00 01 02	Run/Stop both Available on Wired Controller Run/Stop both Unavailable on Wired Controller Run Unavailable/Stop Available on Wired Controller
139	rb	Minimum COOL/HEAT Time for Auto COOL/HEAT Operation	×	00 01 02 03 04 05 06 07 08 09 10 11 12	Not Available 10 min. 20 min. 30 min. 40 min. 50 min. 60 min. 70 min. 80 min. 90 min. 100 min. 110 min. 120 min.

No.	Items	Optional Function	Individual Setting	Setting Condition	Contents
139a	rC	Threshold for Outdoor Temperature for Heat Control in Auto COOL/HEAT Dual Setpoint	×	00	Not Available
				01	68°F (20.0°C)
				02	70°F (21.0°C)
				03	72°F (22.0°C)
				04	73°F (23.0°C)
				05	75°F (24.0°C)
				06	77°F (25.0°C)
				07	79°F (26.0°C)
				08	81°F (27.0°C)
				09	82°F (28.0°C)
				10	84°F (29.0°C)
				11	86°F (30.0°C)
				12	88°F (31.0°C)
				13	90°F (32.0°C)
				14	91°F (33.0°C)
				15	93°F (34.0°C)
				16	95°F (35.0°C)
				17	97°F (36.0°C)
				18	99°F (37.0°C)
				19	100°F (38.0°C)
				20	102°F (39.0°C)
				21	104°F (40.0°C)
				22	32°F (0.0°C)
				23	34°F (1.0°C)
				24	36°F (2.0°C)
				25	37°F (3.0°C)
				26	39°F (4.0°C)
				27	41°F (5.0°C)
				28	43°F (6.0°C)
				29	45°F (7.0°C)
				30	46°F (8.0°C)
				31	48°F (9.0°C)
				32	50°F (10.0°C)
				33	52°F (11.0°C)
				34	54°F (12.0°C)
				35	55°F (13.0°C)
				36	57°F (14.0°C)
				37	59°F (15.0°C)
				38	61°F (16.0°C)
				39	63°F (17.0°C)
				40	64°F (18.0°C)
				41	66°F (19.0°C)

No.	Items	Optional Function	Individual Setting	Setting Condition	Contents
139b	rd	Threshold for Outdoor Temperature for Cool Control in Auto COOL/HEAT Dual Setpoint	×	00	Not Available
				01	50°F (10.0°C)
				02	52°F (11.0°C)
				03	54°F (12.0°C)
				04	55°F (13.0°C)
				05	57°F (14.0°C)
				06	59°F (15.0°C)
				07	61°F (16.0°C)
				08	63°F (17.0°C)
				09	64°F (18.0°C)
				10	66°F (19.0°C)
				11	68°F (20.0°C)
				12	70°F (21.0°C)
				13	72°F (22.0°C)
				14	73°F (23.0°C)
				15	75°F (24.0°C)
				16	77°F (25.0°C)
				17	79°F (26.0°C)
				18	81°F (27.0°C)
				19	82°F (28.0°C)
				20	84°F (29.0°C)
				21	86°F (30.0°C)
				22	88°F (31.0°C)
				23	90°F (32.0°C)
				24	91°F (33.0°C)
				25	93°F (34.0°C)
				26	95°F (35.0°C)
				27	97°F (36.0°C)
				28	99°F (37.0°C)
				29	100°F (38.0°C)
				30	102°F (39.0°C)
				31	104°F (40.0°C)
				32	-4°F (-20.0°C)
				33	-2°F (-19.0°C)
				34	-1°F (-18.0°C)
				35	1°F (-17.0°C)
				36	3°F (-16.0°C)
				37	5°F (-15.0°C)
				38	7°F (-14.0°C)
				39	9°F (-13.0°C)
				40	10°F (-12.0°C)
				41	12°F (-11.0°C)
				42	14°F (-10.0°C)
				43	16°F (-9.0°C)
				44	18°F (-8.0°C)
				45	19°F (-7.0°C)
				46	21°F (-6.0°C)
				47	23°F (-5.0°C)
				48	25°F (-4.0°C)
				49	27°F (-3.0°C)
				50	28°F (-2.0°C)
				51	30°F (-1.0°C)
				52	32°F (0.0°C)
				53	34°F (1.0°C)
				54	36°F (2.0°C)
				55	37°F (3.0°C)
				56	39°F (4.0°C)
				57	41°F (5.0°C)
				58	43°F (6.0°C)
				59	45°F (7.0°C)
				60	46°F (8.0°C)
				61	48°F (9.0°C)

No.	Items	Optional Function	Individual Setting	Setting Condition	Contents
139c	rE	Setback Activating Temperature for Heat Mode	×	00	59°F (15.0°C)
				01	60°F (16.0°C)
				02	62°F (17.0°C)
				03	64°F (18.0°C)
				04	66°F (19.0°C)
				05	50°F (10.0°C)
				06	52°F (11.0°C)
				07	54°F (12.0°C)
				08	56°F (13.0°C)
				09	58°F (14.0°C)
139d	rF	Setback Activating Temperature for Cool Mode	×	00	78°F (26.0°C)
				01	80°F (27.0°C)
				02	82°F (28.0°C)
				03	84°F (29.0°C)
				04	86°F (30.0°C)
				05	88°F (31.0°C)
				06	90°F (32.0°C)
				07	92°F (33.0°C)
				08	94°F (34.0°C)
				09	95°F (35.0°C)
				10	77°F (25.0°C)
148	JC	Calibration for Thermistor of Wired Controller (CIW01)	×	00	0°F (0°C)
				01	-1°F (-0.5°C)
				02	-2°F (-1.0°C)
				03	-3°F (-1.5°C)
				04	-3°F (-2.0°C)
				05	-4°F (-2.5°C)
				06	-5°F (-3.0°C)
				07	-6°F (-3.5°C)
				08	+1°F (+0.5°C)
				09	+2°F (+1.0°C)
				10	+3°F (+1.5°C)
				11	+3°F (+2.0°C)
				12	+4°F (+2.5°C)
				13	+5°F (+3.0°C)
				14	+6°F (+3.5°C)
				15	0°F (0°C)

**1): Be sure to use only the “00” setting condition when combining optional function settings, “q4” and “q5,” with a water source unit. The water source unit detects entering water temperature instead of outdoor ambient temperature. This setting does not function.

**2): In case of ducted type, DO NOT change optional function setting “q6” to “01” when duct heater is connected. Otherwise, fire may result. Be sure to follow instructions provided in the manual to prevent fire or injury.

**3): Optional function setting “q6” can not be used in the wired controller group consisting of indoor units connected to a mix of different auxiliary heater types.

**4): Duct Heater and Baseboard Heater can not be used together.
VAH Heater and Baseboard Heater can not be used together.
(Same heater signal connector is used.)

**5): Setback temperature control is not available for EconoFresh.

NOTES:

1. Wait at least 3 minutes from initial power ON to change the optional setting.
2. The optional settings are different according to the indoor and outdoor unit models.
   Check to ensure if the unit has the optional setting or not.
3. The above optional functions with “X” mark at the individual setting can change the condition only when “All Rooms” is selected in the Test Run Menu > Function Selection Menu.
4. Above function selection items are available only for indoor units and wired controllers with new software applied. Check to ensure if the unit has the optional setting or not.

5.4.2.2 Description of Function Selection Item (Continued)

(101) Auxiliary Heater at Defrosting Operation (L9)

This function is utilized to activate/deactivate heater during defrost operation when heater operation is enabled.
The setting conditions and the heater during defrost are as follows:

Setting Condition	Heater during Defrost	Fan Operation
00	ON	SLOW
01	OFF	STOP

(116) Auxiliary Heater Setting (q1)

This function is utilized to activate/deactivate auxiliary heater operation.
When this function is valid, the “auxiliary heater” signal is output from indoor unit PCB connector depending on indoor and outdoor temperature, indoor unit type and the type of auxiliary heater selected at (121).

NOTES:

- After all installation is complete, verify that the auxiliary heater operates properly.
- “Auxiliary heater” signal does not output during Test Run.
- In case the auxiliary heater is connected and the setting is enabled, during following instances the auxiliary heater alone without heat pump may operate in heating mode.

  During Defrosting Operation
  Low Ambient Temperature

(117) Auxiliary Heater ON Compensation (for Auxiliary Heater Setting) (q2)

This function is utilized to change the indoor temperature condition to activate auxiliary heater.
This function is invalid when the function of "Auxiliary Heater Setting" is invalid.

Setting Condition	Actual Control Temperature
-3 (-1.5)	Wired Controller Setting Temperature (Indicated Value) -3°F (-1.5°C)
-4 (-2.5)	Wired Controller Setting Temperature (Indicated Value) -4°F (-2.5°C)
-5 (-3.0)	Wired Controller Setting Temperature (Indicated Value) -5°F (-3.0°C)
-6 (-3.5)	Wired Controller Setting Temperature (Indicated Value) -6°F (-3.5°C)
-7 (-4.0)	Wired Controller Setting Temperature (Indicated Value) -7°F (-4.0°C)
-8 (-4.5)	Wired Controller Setting Temperature (Indicated Value) -8°F (-4.5°C)
-9 (-5.0)	Wired Controller Setting Temperature (Indicated Value) -9°F (-5.0°C)
-1 (-0.5)	Wired Controller Setting Temperature (Indicated Value) -1°F (-0.5°C)
-2 (-1.0)	Wired Controller Setting Temperature (Indicated Value) -2°F (-1.0°C)

(118) Auxiliary Heater OFF Compensation (for Auxiliary Heater Setting) (q3)

This function is utilized to change the indoor temperature condition to deactivate auxiliary heater.
This function is invalid when the function of "Auxiliary Heater Setting" is invalid.

Setting Condition	Actual Control Temperature
0 (0.0)	Wired Controller Setting Temperature (Indicated Value)
1 (0.5)	Wired Controller Setting Temperature (Indicated Value) +1°F (0.5°C)

(119) Ambient Temperature Restriction Setpoint (for Auxiliary Heater Setting) (q4)

This function is utilized to change the outdoor ambient temperature condition to Thermo-OFF and operate with auxiliary heater only.
If the ambient temperature is below (q4), the operation is forced thermo-OFF. With this function, heating operation is performed only by the auxiliary heater. There is no air conditioning operation.
This function is invalid when the function of "Auxiliary Heater Setting" is invalid.

Setting Condition	Setting Temperature (q4)
-4 (-20.0)	-4°F (-20.0°C)
2 (-17.0)	2°F (-17.0°C)
8 (-13.0)	8°F (-13.0°C)
14 (-10.0)	14°F (-10.0°C)
20 (-7.0)	20°F (-7.0°C)
26 (-3.0)	26°F (-3.0°C)
32 (0.0)	32°F (0.0°C)
-13 (-25.0)	-13°F (-25.0°C)
-8 (-22.0)	-8°F (-22.0°C)

NOTE:
Be sure to use only the "00" setting condition when combining this "q4" function with a water source unit.

(120) Ambient Temperature Restriction Setpoint Compensation (for Auxiliary Heater Setting) (q5)

This function is utilized to change the outdoor ambient temperature condition to change operation from auxiliary heater only to Thermo-ON with auxiliary heater.

This function is invalid when the function of "Auxiliary Heater Setting" is invalid.

Setting Condition	Actual Control Temperature
4 (2.5)	(q4) + 4°F (2.5°C)
5 (3.0)	(q4) + 5°F (3.0°C)
6 (3.5)	(q4) + 6°F (3.5°C)
1 (0.5)	(q4) + 1°F (0.5°C)
2 (1.0)	(q4) + 2°F (1.0°C)
3 (1.5)	(q4) + 3°F (1.5°C)

NOTE:
Be sure to use only the "00" setting condition when combining this "q5" function with a water source unit.

(121) Switching Type of Auxiliary Heater (q6)

This function is utilized to select auxiliary heater type when auxiliary heater operation is enabled.
The setting conditions and selectable type of auxiliary heater depends on indoor unit type.
This function can not be used in the wired controller group consisting of indoor units connected to mixture of different types of auxiliary heaters.
This function is invalid when the function of “Auxiliary Heater Setting” is invalid.

For Ducted Type:

Setting Condition	Type of Auxiliary Heater
00	Duct Heater
01	Baseboard Heater

NOTES:

In case of duct heater (as auxiliary heater) is installed and connected:

- DO NOT use “01: Baseboard Heater”. Otherwise, fire may result.
- Indoor unit is restricted to the following fan speeds during the auxiliary heater ON is output and does not correspond to the wired controller setting.

Wired Controller Setting	Fan Speed
Low	High
Medium	High
High	High
High2	High2

- Airflow volume High2 can be selected, if available.
- Fan delay will start for 120 seconds when the unit is turned OFF from the wired controller or during defrost operation (when optional function L9 on the wired controller is set to “01”).
- Fan delay will not start when an alarm has occurred.

For Non-Ducted Type:

Setting Condition	Type of Auxiliary Heater
00	Not Available
01	Baseboard Heater

NOTES:

In case of baseboard heater (as auxiliary heater) is installed and connected:

- Fan delay is not available.
- Indoor unit fan speeds correspond to the wired controller setting.
- Fan will stop during defrost operation while auxiliary heater ON is output.

(122) Emergency Heater Control (q7)

This function enables the temporary heating operation by automatically turning the field-supplied auxiliary heater ON in the case of the alarm occurrence with IDU stoppage for some reason or ODU and IDU is systematically not connected.
This function is invalid when the function of “Auxiliary Heater Setting” is invalid.

Setting Condition	Emergency Heat Control
00	ON
01	OFF

If Emergency Heat is enabled, no general alarm screen is shown with the event of alarm during heating operation, but it is automatically transfered to Emergency Heat control (excluding some alarms).
Emergency Heat/Alarm Code is alternately displayed on the wired controller screen during Emergency Heat control.
The latest alarm generated can be checked at contact information on the guide screen.

When Emergency Heat control is deactivated,

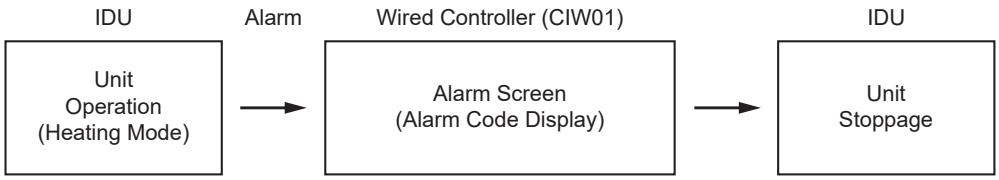

When Emergency Heat control is activated,

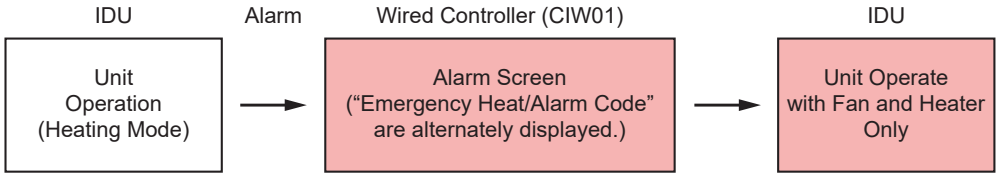

NOTES:

1. If Emergency Heat Control is enabled but the operation mode is cooling operation and alarm occurs, the indoor unit is stopped with alarm.
2. If Emergency Heat Control is enabled but the operation mode is automatic heating/cooling operation then Emergency Heat is available while the indoor unit is in heating operation. In case the indoor unit operating in heating operation changes to cooling operation, the indoor unit performs fan operation with thermo-OFF.
3. Indications of Emergency Heat is only available for Wired Controller (CIW01).

(126) Mode with Setback (qb)

Setback operation is a function that can keep the room comfortable with the minimum amount of energy necessary while it is unoccupied.

Any setup in “01” to “03” can activate setback operation in the selected mode.

Setting Condition	Setback Operation Mode
00	Not Available
01	Cooling Only
02	Heating Only
03	Heating & Cooling

NOTE:
Inlet air thermistor runs the risk of failing to sense a room temperature accurately while in this function.
Use wired controller thermistor or remote sensor along with it.
In addition, set optional function setting “C8” to “01” at (22).

(127) Temperature Difference during Setback Operation (qC)

Target temperatures for both cooling and heating operation are determined versus a temperature to start setback operation (rE, rF) selected in (139c) and (139d).

Target temperature is calculated as shown below.

Target temperature in cooling mode: rF - qC °F (°C)

Target temperature in heating mode: rE + qC °F (°C)

Setting Condition	Target Temperature Difference
00	3°F (2.0°C)
01	5°F (3.0°C)
02	7°F (4.0°C)
03	9°F (5.0°C)
04	2°F (1.0°C)

Setback operation runs as room temperature reaches the specified temperature to start, and stops at the target temperature. Setback operation is function that can keep the room comfortable with the minimum amount of energy necessary while it is unoccupied. Select a target temperature in cooling mode that is higher than normal operation temperature, lower than in heating mode.

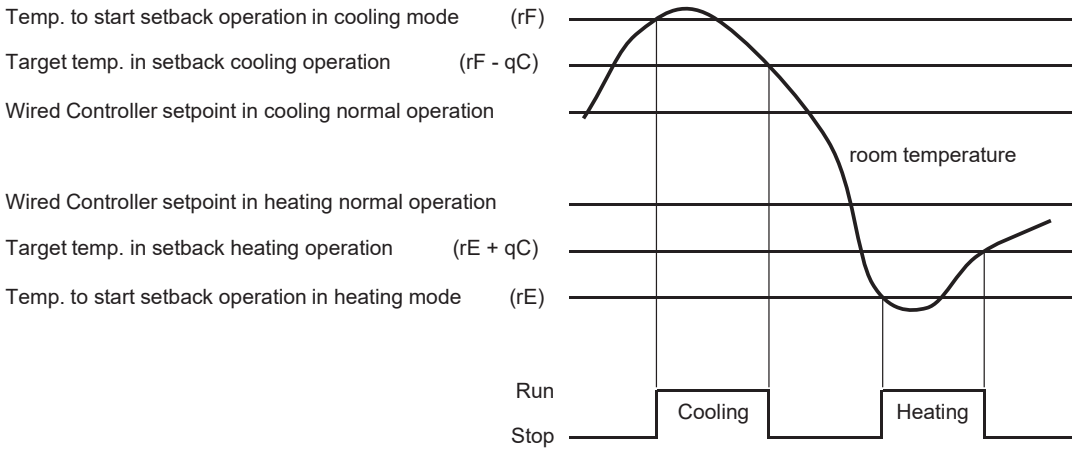

(128) Minimum Setback (Stop) Time (qd)

To save frequent run/stop of setback operation, provide the minimum off-time from stop of setback operation to the next one. As shown below, even if room temperature gets the setpoint to start setback operation, setback operation does not start until the minimum off-time expires.

Setting Condition	Minute off-time
00	10 minute
01	20 minute
02	30 minute
⋮	⋮
10	110 minute
11	120 minute

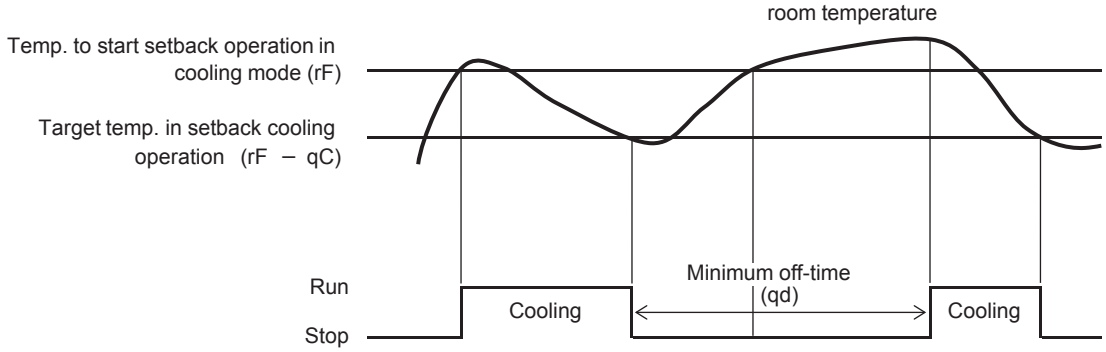

(128a) Setback Mode (qE)

Selection “01” to “03” mentioned in (126) can change mode into the setback.
Following setback modes can be selected in accordance with the intended use.

Setting Condition	Setback Mode	Description
00	Always	Always the setback operation is available.
01	Input	In hotel rooms, removing the card key triggers the setback operation. Reinserting the card key turns the operation back to normal.
02	Schedule	Setback operation is available during the preset durations, such as night time. After “Scheduling” is configured, set the start time and the stop time by the wired controller to enable the setback operation. When the preset duration is over, the operation goes back to normal operation.
03	Manual	Setback function can be available for long unoccupied periods, such as consecutive holidays. After “Manual” is selected, the setback operation can start with the wired controller to enable the setback function. When the function is null, the normal control works.

When “01: Input” is selected, it requires the setup of “Input: 09” as well. Refer to Section 5.4.1.7 “Setback Operation by External Input” for more details.
When “02: Schedule” and “03: Manual” are selected, they need to be setup by the wired controller. Refer to wired controller (CIW01) Operation Manual.

(128b) Operation State after Terminating Setback Operation (qF)

Followings are selections of operation state that switch into when a setback duration is over.

Setting Condition	Run or Stop after Setback Duration
00	Stop
01	Run
02	Operation state before the setback starts.

In case “02: Operation state before the setback starts.” is configured, the state goes back to the last operating condition before the setback starts.

(137) Wired Controller Prohibit Function while Setback Operation (r9)

Run or stop selected by users can be disabled by wired controller during setback.

NOTE:
When the mode mentioned in (128a) is selected as “00: Always,” the function is fixed as “00: Disabled”.

Setting Condition	Disabled Wired Controller during Setback
00	Disabled
01	Constrain of Run/Stop
02	Constrain of Operation

(139) Minimum COOL/HEAT Time for Auto COOL/HEAT Operation (rb)

To restrain frequent diversion of the cooling/heating operation, the minimum period between the completion of the transition and the next one is determined. As shown the chart below, operation mode does not change until the minimum transition time passes, even if the room temperature reaches the setpoint that shifts to the heating operation.

Setting Condition	Minimum Period of Mode Change in Dual Operation
00	Disabled
01	10 minute
02	20 minute
03	30 minute
⋮	⋮
11	110 minute
12	120 minute

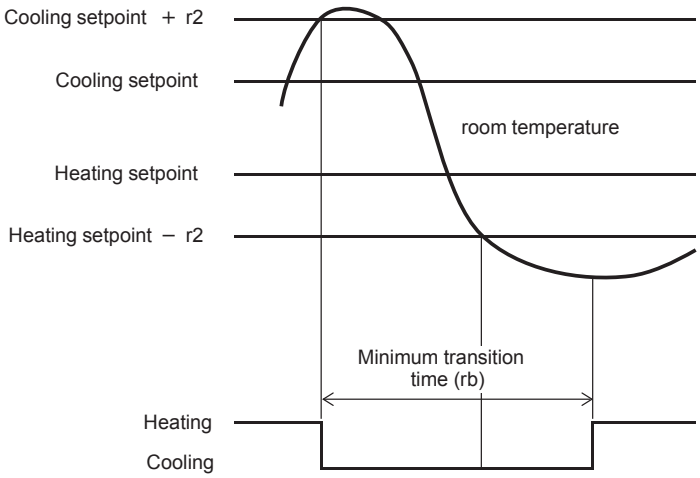

(139a) Threshold for Outdoor Temperature for Heat Control in Auto COOL/HEAT Dual Setpoint (rC)

Depending on outdoor temperature, constraints in automatic cooling/heating dual setup are available without performing mode transitions, even though the room temperature reaches the setpoint that shifts the operation mode from cooling to heating. As shown in the chart below, when the ambient is higher than the constrained setpoint, the operation mode does not shift even though the room temperature reaches the setpoint.

Setting Condition	Constrain Setpoint for Ambient in Auto Dual Operation
00	Disabled
01	68°F (20.0°C)
02	70°F (21.0°C)
03	72°F (22.0°C)
⋮	⋮
20	102°F (39.0°C)
21	104°F (40.0°C)
22	32°F (0.0°C)
23	34°F (1.0°C)
24	36°F (2.0°C)
⋮	⋮
40	64°F (18.0°C)
41	66°F (19.0°C)

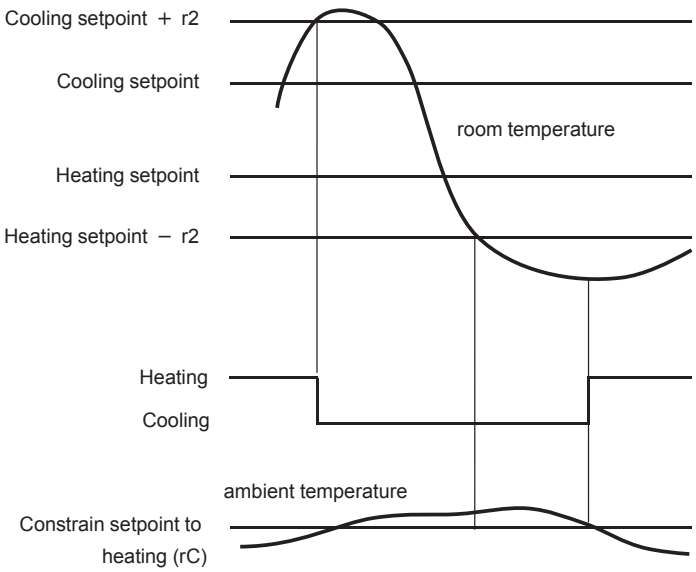

NOTES:

1. Water Source type outdoor unit is not programed this function. Use as “00: Disabled”.
2. Ambient constrain control in outdoor unit takes priority.

(139b) Threshold for Outdoor Temperature for Cool Control in Auto COOL/HEAT Dual Setpoint (rd)

Depending on the outdoor temperature, constraints in the automatic cooling/heating dual setup are available without performing mode transitions, even though the room temperature reaches the setpoint that shifts the operation mode from the heating to cooling. As shown in the chart below, in case the ambient is lower than the constrained setpoint, the operation mode does not change even though the room temperature reaches the setpoint that shifts to cooling operation.

Setting Condition	Constrain Setpoint for Ambient in Auto Dual Operation
00	Disabled
01	50°F (10.0°C)
02	52°F (11.0°C)
03	54°F (12.0°C)
⋮	⋮
30	102°F (39.0°C)
31	104°F (40.0°C)
32	-4°F (-20.0°C)
33	-2°F (-19.0°C)
34	-1°F (-18.0°C)
⋮	⋮
60	46°F (8.0°C)
61	48°F (9.0°C)

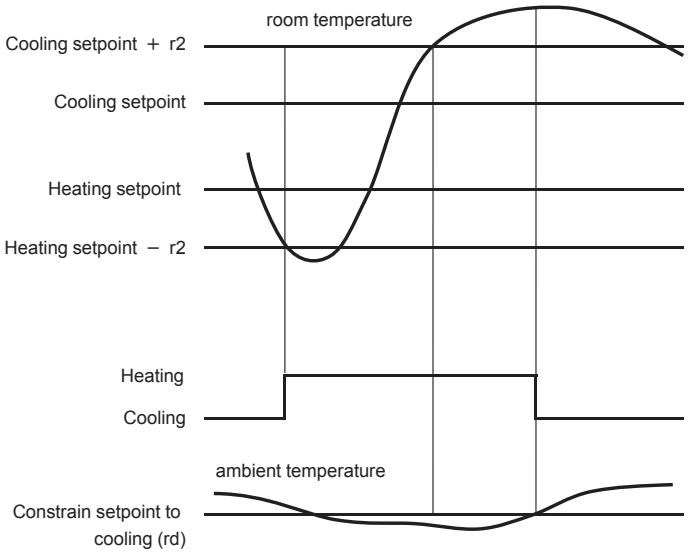

NOTES:

1. Water Source type outdoor unit does not match this function. Use as “00: Disabled”.
2. Ambient constrain control in outdoor unit takes priority.

(139c) Setback Activating Temperature for Heat Mode (rE)

Room temperature is determined to start the heating operation during the setback.

Setting Condition	Temp. Start Heating Mode in Setback
00	59°F (15.0°C)
01	60°F (16.0°C)
02	62°F (17.0°C)
03	64°F (18.0°C)
04	66°F (19.0°C)
05	50°F (10.0°C)
06	52°F (11.0°C)
07	54°F (12.0°C)
08	56°F (13.0°C)
09	58°F (14.0°C)

(139d) Setback Activating Temperature for Cool Mode (rF)

Room temperature is determined to start the cooling operation during the setback.

Setting Condition	Temp. Start Cooling Mode in Setback
00	78°F (26.0°C)
01	80°F (27.0°C)
02	82°F (28.0°C)
03	84°F (29.0°C)
04	86°F (30.0°C)
05	88°F (31.0°C)
06	90°F (32.0°C)
07	92°F (33.0°C)
08	94°F (34.0°C)
09	95°F (35.0°C)
10	77°F (25.0°C)

(148) Calibration for Thermistor of Wired Controller (JC)

Temperature can be calibrated by the controller thermistor (CIW01).
In addition, set optional function setting “C8” to “01” at (22).

Setting Condition	Calibrated Temperature
00	0°F (0°C)
01	-1°F (-0.5°C)
02	-2°F (-1.0°C)
03	-3°F (-1.5°C)
04	-3°F (-2.0°C)
05	-4°F (-2.5°C)
06	-5°F (-3.0°C)
07	-6°F (-3.5°C)
08	+1°F (+0.5°C)
09	+2°F (+1.0°C)
10	+3°F (+1.5°C)
11	+3°F (+2.0°C)
12	+4°F (+2.5°C)
13	+5°F (+3.0°C)
14	+6°F (+3.5°C)
15	0°F (0°C)

5.4.2.3 Other Considerations

■ Emergency Heat Control

Indication of Emergency Heat Control on Wired Controller (CIW01)

The display shown below indicates that emergency heat control is in progress.
This control is activated when a malfunction of the outdoor unit or communication failure between the indoor unit and outdoor unit occurs.
Heating by the auxiliary heater only is performed during this time, and normal operation can not be performed.

If problem still remains even after following Section 3 “Troubleshooting,” or other problems not mentioned in the previous issues occur, stop using the product and contact your distributor or contractor.

In case contact information is registered in the wired controller in advance, contact information can be viewed on the wired controller.
Refer to Section 9.6 “Contact Information” in the wired controller (CIW01) operation manual.

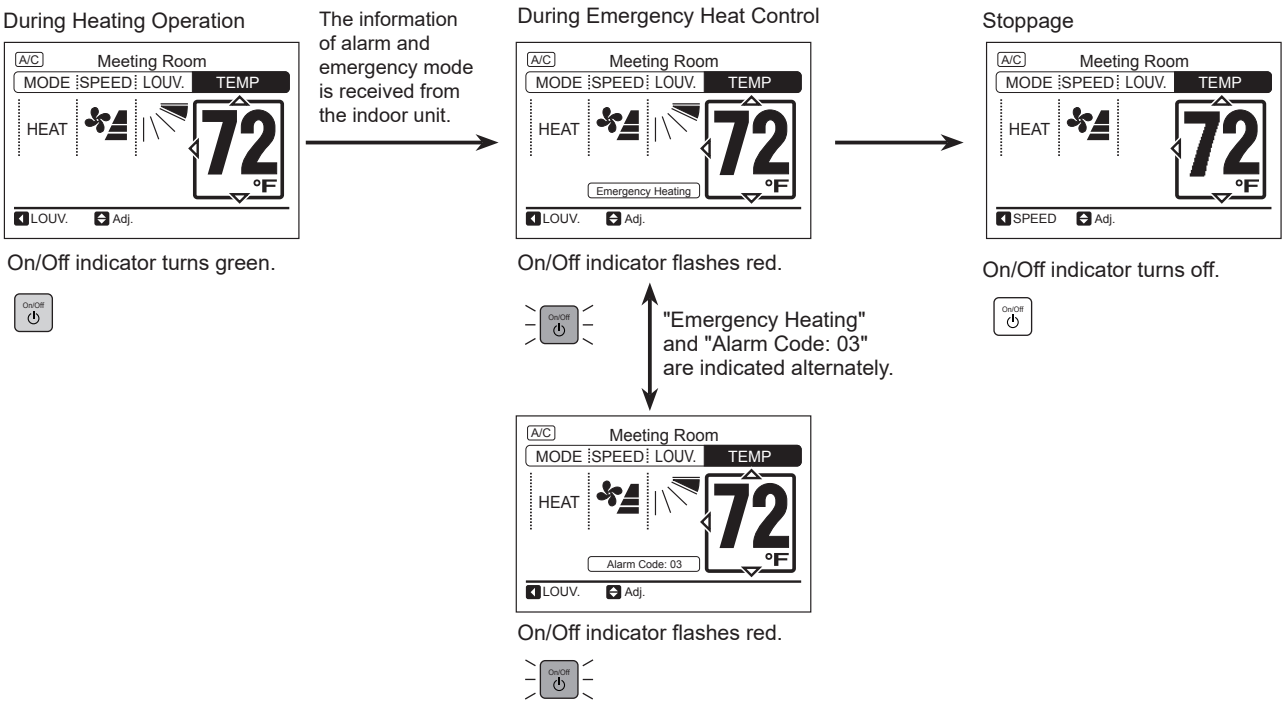

NOTE:
Indications of Emergency Heat are only available to Wired Controller (CIW01).

■ **Setback Temperature Control**

Existing setback temperature control (Combination of external input setting “Input 1” or “input 2” to “09” and optional function setting “r3” (setback temperature compensation (offset)) remains unchanged. Following describes the new additional setback modes.

In case of EconoFresh, this control is not available for all fresh mode and gas sensor mode.

(1) Abstract

Setback Temperature Control is mainly to sustain a comfort room air temperature while occupants are out of the room.
Four features are shown below:

Mode	Usage Example
Setback Input	At hotel rooms, the Setback Temperature Control will be activated when the card key is taken out. As soon as the card key is inserted again, the normal control will be restored.
Setback Schedule	Setback Temperature Control works during a predetermined period such as during night time. The period should be configured by users. The normal control will be restored once the predetermined period is over.
Setback Manual	During a long down time such as during a vacation, the Setback Temperature Control will remain working as long as the user leaves it on. When turning off the Setback Temperature Control manually, the normal control will be restored.
Setback Always	Setback Temperature Control always runs.

In the setback operation with an external input (card key or so), “Input setting” for the wired controller is required. Refer to Section 5.4.1.7 “Setback Operation by External Input”.

(2) How to set Setback Temperature Control

This setting is available through the optional function in the Function Selection Menu, which is located in the Test Run Menu of the wired controller.
In case of using an external input, the external input setting will also be required on the Test Run Menu in the wired controller.
Select an item on the table below and enter it to enable this function.

qb	Mode with Setback
qC	Temperature Difference during Setback Operation
qd	Minimum Setback (Stop) Time
qE	Setback Mode
qF	Operation State after Terminating Setback Operation
r9	Wired Controller Prohibit Function while Setback Operation
rE	Setback Activating Temperature for Heat Mode
rf	Setback Activating Temperature for Cool Mode

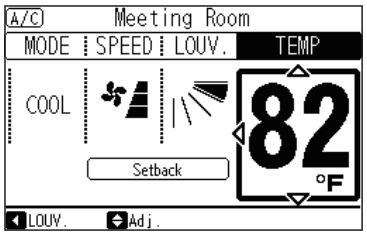

Screen displays “Setback” during functioning.

NOTE:
Temperature setpoint indication and adjustment on the wired controller does not change the indoor unit operation during the new additional setback modes.

(3) Control Operation Time Chart

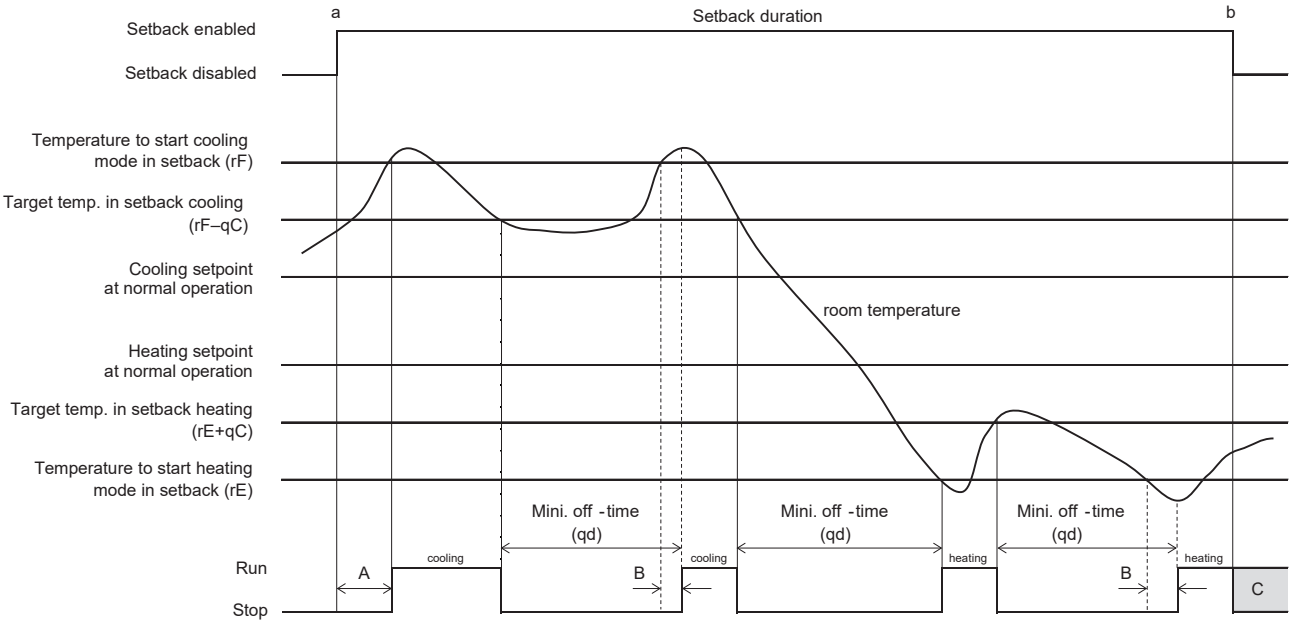

A: Although the setback operation should run, it does not start if the setpoint is not yet reached to the specified value.
B: The setback does not run due to the minimum off-time.
C: The setback runs or stops due to the configurations of run/stop at setback end (qF).
a: The point when the setback turns to be active (start of setback duration).
b. The point when the setback turns to be inactive (end of setback duration).

* If setback temperature falls outside setback validity period, FAN will be stopped.

NOTES:

1. If either one of the Wired Controller or indoor unit existing in the same group is not retained this function, the function does not work.
2. During setback, there maybe the risk that inlet air thermistor cannot detect accurate room temperature. Use remote sensor (optional part) or thermistor of wired controller (wired controller thermistor).
3. Make sure to set a target temperature in cooling mode to be higher than the normal cooling operation, and in heating mode to be lower than the normal heating operation. Setback operation is the function to keep the room with comfort on the minimum necessary while the room is unoccupied. Setting the proper target temperature can prevent unintentional increase of the power or unexpected operation, such as cooling mode in normal operation turns to heating mode in setback with the same setpoint.

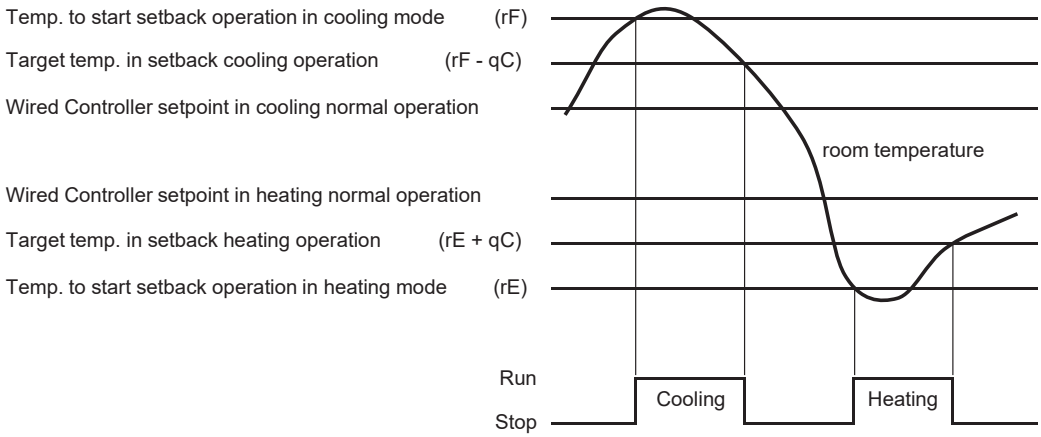

4. Louver is slightly opened at stop during the setback.

(4) Flow Chart

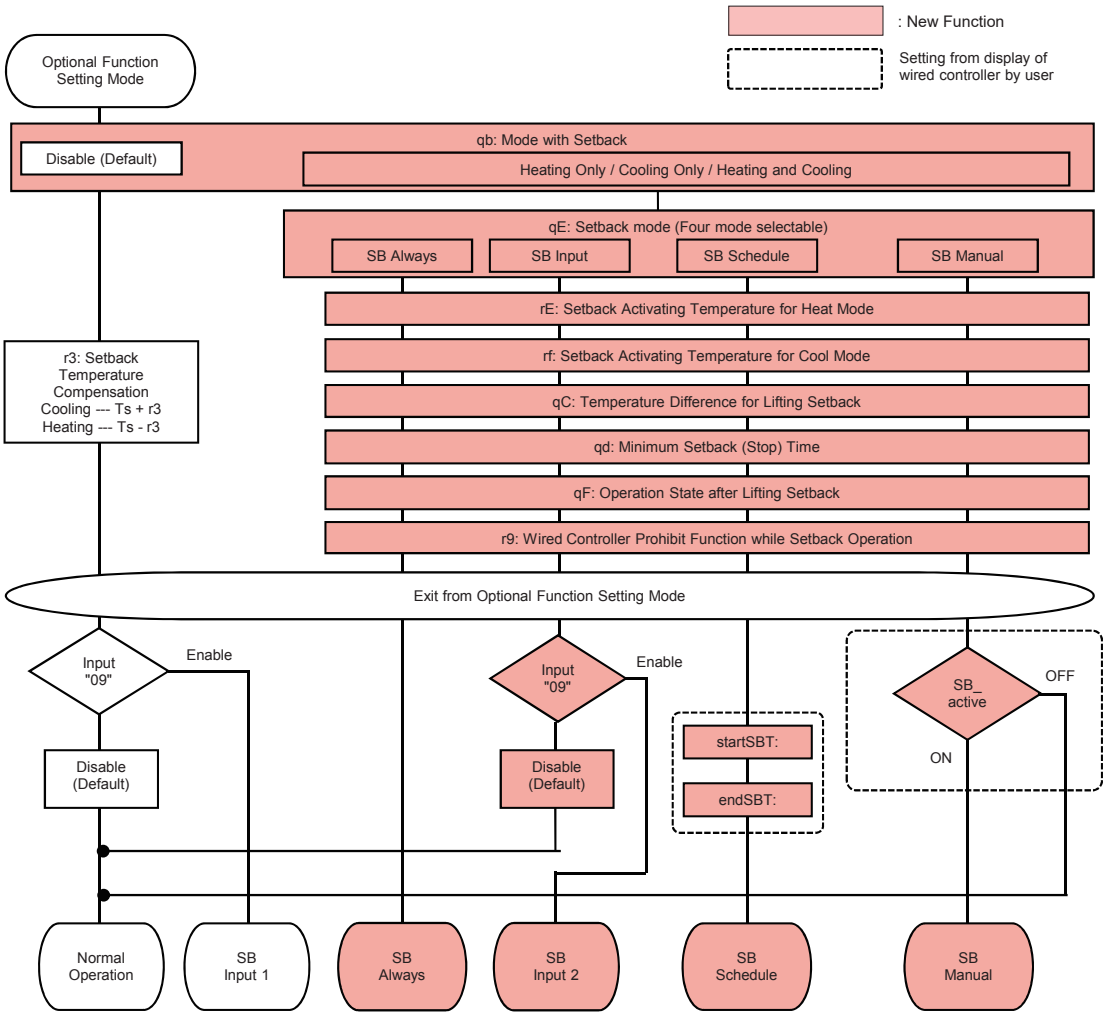

Items	Optional Function	Range	Units
r3	Setback Temperature Compensation	4(2.5) 5(3.0) ⋮ 10(5.5) 1(0.5) 2(1.0) 3(1.5)	°F (°C)
qb	Mode with Setback	00: Not Available 01: Cooling Only 02: Heating Only 03: Heating & Cooling	—
qE	Setback Mode	00: Always 01: Input 02: Schedule 03: Manual	—
rE	Setback Activating Temperature for Heat Mode	00: 59(15) 01: 60(16) ⋮ 04: 66(19) 05: 50(10) 06: 52(11) ⋮ 09: 58(14)	°F(°C)

Items	Optional Function	Range	Units
rF	Setback Activating Temperature for Cool Mode	00: 78(26) 01: 80(27) ⋮ 09: 95(35) 10: 77(25)	°F (°C)
qC	Temperature Difference during Setback Operation	00: 3(2) 01: 5(3) ⋮ 03: 9(5) 04: 2(1)	°F (°C)
qd	Minimum Setback (Stop) Time	00: 10 01: 20 ⋮ 11: 120	min
qF	Operation State after Terminating Setback Operation	00: Stop 01: Run 02: State before Setback Operation	—
r9	Wired Controller Prohibit Function while Setback Operation	00: Run/Stop both Available on Wired Controller 01: Run/Stop both Unavailable on Wired Controller 02: Run Unavailable/Stop Available on Wired Controller	—

NOTE:
• Setting Condition with Underlined Part is Factory-Setting.

(5) Four Modes for Setback Function

Four modes on the table below during the setback being set by qE.

Setback mode (qE)	a	b
Always *1	-	-
Input *2	Card Key OUT	Card Key IN
Schedule *3	Start time	End time
Manual *3	Set “enabled” with wired controller	Set “disabled” with wired controller

*1. Setback is always available.
*2. “Input: 09” is required. Refer to Section 5.4.1.7 “Setback Operation by External Input” for more details.
*3. The setup on the wired controller is required. Refer to wired controller (CIW01) Operation Manual.

Fan for the setback operation is set on the wired controller.

< “Input” in Setback Mode >

Refer to Section 5.4.1.7 “Setback Operation by External Input”.

< “Schedule” on Wired Controller in Setback Mode >

- It sets up a duration of the setback to be active.
- It is activated when “Schedule” in the setback mode is configured.
- IDU that does not support the setback function cannot set up “Schedule”.

(a) Select “Setback Setting” from the “Menu” screen and press “OK”.
The “Setback Setting” screen displays.

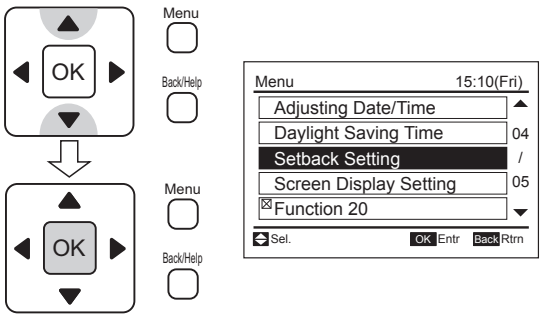

NOTE:
If the present time has not been set yet.
“Set Date/Time” is automatically displayed.
“Adjusting Date/Time” is automatically shown if the clock is not set yet.

(b) Press “△” or “▽” to select the setting data.
“ON Time” and “OFF Time” is selected in turn.

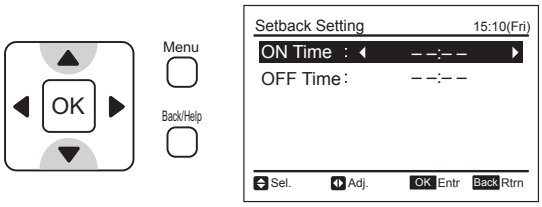

(c) Press “◁ ” or “ ▷” to select setting contents.
The time goes 30 minutes ahead or behind.
Long press “◁ ” or “ ▷” to seamlessly increase/decrease number.
Press “OK” to finish the setting.
The confirmation screen displays.

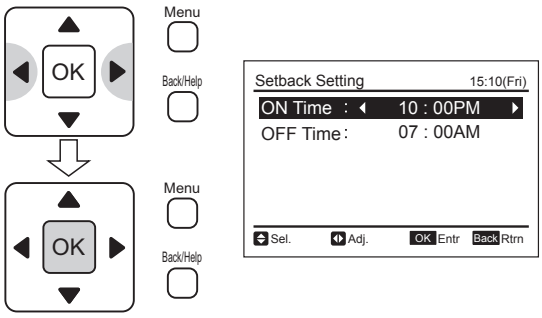

NOTE:
Do not set the same time for ON Time and OFF Time.
Unavailable if ON time/OFF Time is not set.

(d) Press “OK ” to finish the “Setback Setting”.
The confirmation screen displays.
Press “Back/Help” to return to the operation setting screen.

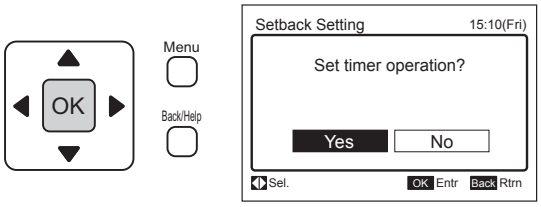

(e) Select “Yes” by pressing “◁ ” or “ ▷” and press “OK”.
The setting is confirmed and the screen returns to the normal mode.

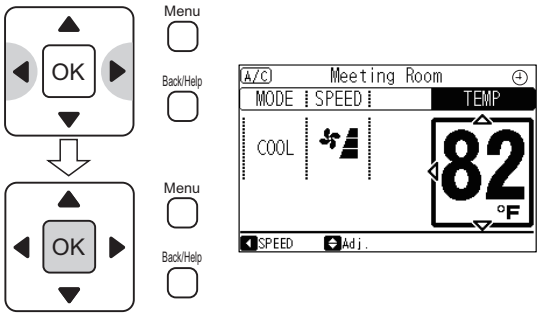

NOTE:
“ ⊕ ” indicates when the scheduled operation is activated.
Setback operation cannot be ON/OFF while wired controller operation is prohibited or “ ⊗ ” is indicated on the screen. “ ⊗ ” is indicated when the clock is not set.

< “Manual” on Wired Controller in Setback Mode >

- Users can activate the setback operation manually.
- Configuration of “Manual” in the setback mode is required.
- “Manual” is used when users go away for a long period of time.
- When the IDU does not come with the setback, “Manual” is not available.

(a) Select “Setback Setting” from the “Menu” screen and press “OK”.
The “Setback Setting” menu is displayed.

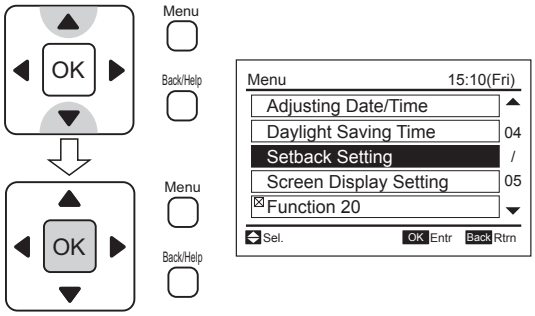

(b) Select “Yes” by pressing “◁ ” or “ ▷” and press “OK”.
The setting is confirmed and the screen returns to the normal mode.

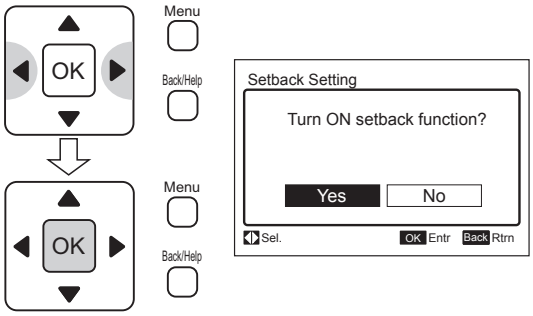

NOTE:
Setback operation cannot be ON/OFF while Wired Controller operation is prohibited.

< Representative Unit for Setback Operation >

- Representative unit for the setback is determined among the same wired controller group.
  The smallest unit address and refrigerant cycle numbers are automatically set as the representative unit.
- Other units in the same group follow the control of the representative unit.

Change of Representative Unit

When there is a need for replacing the representative unit or changing a system after installation, the setup in the wired controller may not be compatible with the system. The function does not work in such a case. Confirm and change the representative unit referring to the following steps below.

(a) In normal mode while air conditioning unit is not operating, press “Menu” and “Back/Help” simultaneously for three seconds or longer. Test Run menu is shown.

(b) Select “Setback Trigger Unit” on the Test Run menu and press “OK”. “Setback Trigger Unit” setting is shown.

(c) Press “△ ▽ ◁ ▷” to select a target indoor unit and press “OK”.
In case only one indoor unit is connected to this wired controller, this step is skipped. Move to step (d).

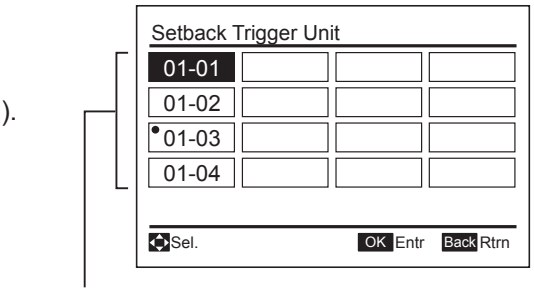

Refrigerant Cycle – Address Number

Indoor unit that is currently set as trigger unit has “●” on the top left.

(d) Press “◁ ▷” to select “Yes” and press “OK” to set a trigger unit. Step (e) screen is displayed.
When “No” is selected, the screen returns to step (c).

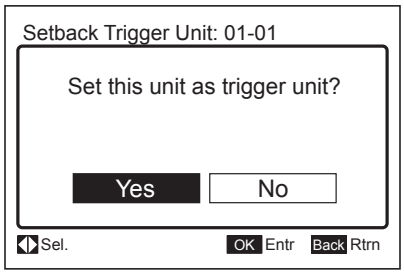

(e) Press “OK” to return to step (a).

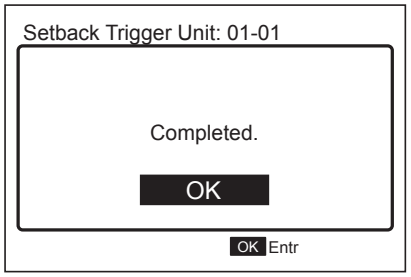

NOTICE

- If two controllers are connected to same indoor unit, “Trigger Unit Setting” is available only on the main wired controller.

< Suspension of Setback >

- Setback can be run or stopped by the wired controller when users stay in the room for a short time during the setback period.
  The setback operation suspends once, and “Setback aborted” appears on the screen of the wired controller.
- IDU runs in normal control once the setback is aborted.
- The setback can be run or stopped again by the wired controller when users restart the setback.
  A message on the screen turns into “Setback” from “Setback aborted”.
- See the chart below about the suspension of setback operation.

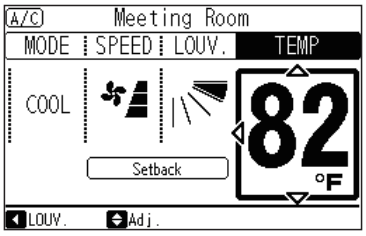

(a) Setback Operation stops by the wired controller during the setback operation period.

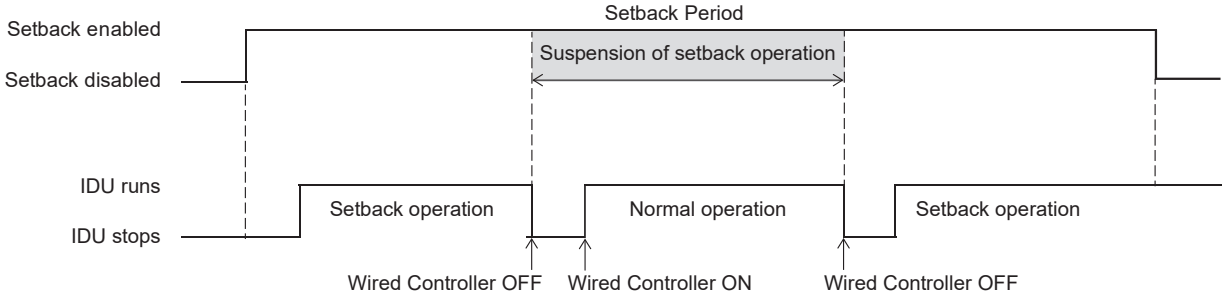

(b) Normal Operation starts by wired controller during suspension of setback operation period.

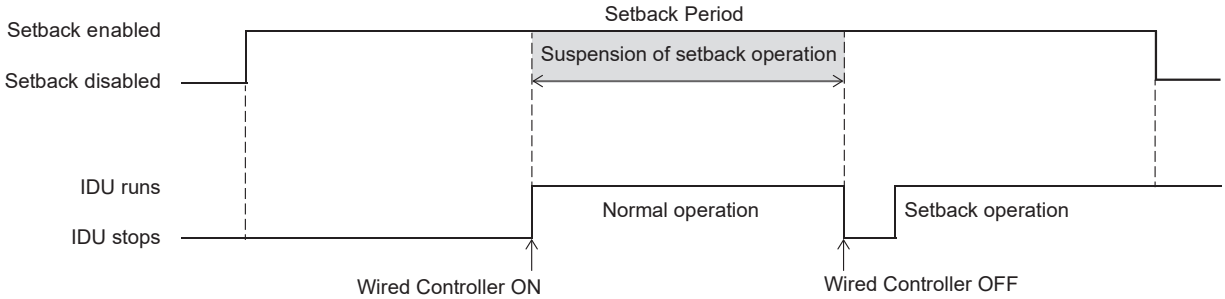

- IDU current state can be identified by the run indicator and messages (such as “Setback aborted” and “Setback”) on the wired controller.

“Setback” Indication	“Setback aborted” Indication	Run Indicator (Green)	IDU ON•OFF / Operation Type
ON	OFF	ON	ON / Setback operation.
OFF	ON	ON	ON / Setback is suspended. Normal operation.
OFF	OFF	ON	ON / Normal operation.
ON	OFF	OFF	OFF / It is in setback period, but no operation.
OFF	ON	OFF	OFF / Setback is suspended. No operation.
OFF	OFF	OFF	OFF / No operation.

< Precaution Statements >

- If either the wired controller or indoor unit existing in the same group does not retain this function, the function does not work.
- During the setback is ON, inlet air thermistor runs the risk of failing to sense accurate room temperature in the function. Use wired controller thermistor or remote sensor along with it.
  In addition, set “01” into C8 in (22).
- Make sure to set a target temperature in cooling mode to be higher than the normal cooling operation, and in heating mode to be lower than the normal heating operation. Setback operation is the function to keep the room comfortable with the minimum amount of energy necessary while the room is unoccupied. Setting the proper target temperature can prevent unintentional increase of power or unexpected operation, such as cooling mode in normal operation turning to heating mode in setback with the same setpoint.

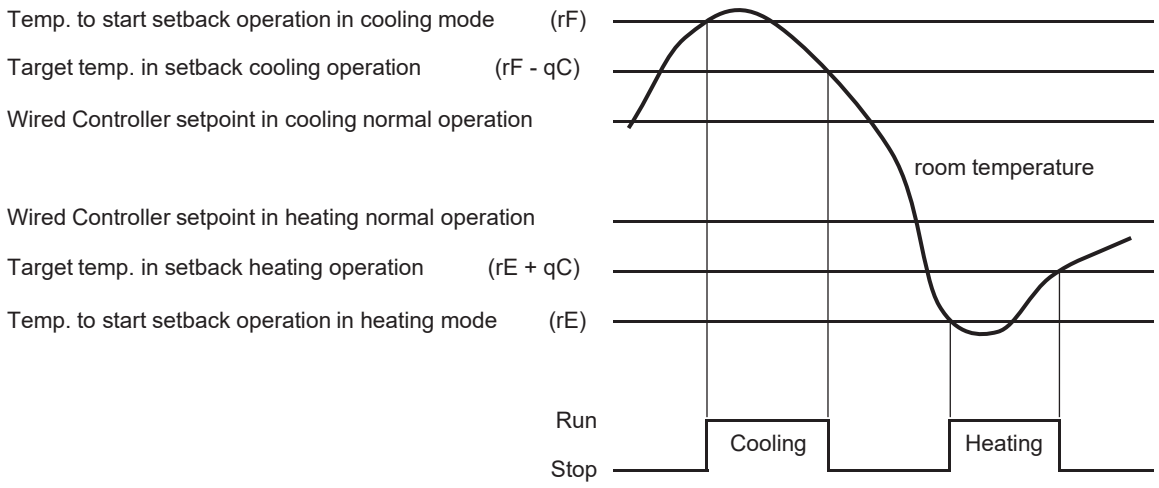

- In case of indoor unit with louver, louver is slightly opened at stop during the setback.
- Setback operation automatically continues when the power supply is restored after the power failure during setback operation.
- When the setback mode is in “Schedule,” make sure that the start time and end time are not reversely entered in the wired controller.
- When the setback mode is in “Schedule,” the setback is not activated while the normal operation still runs. After the normal operation stops by a command from the wired controller, the setback starts.

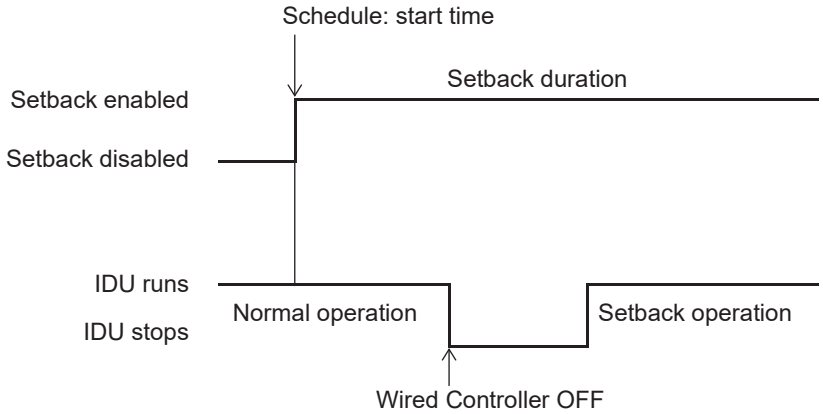

- Function selection qF is to specify behaviors at end of the setback. If it is set as “02* The last operation state in setback duration,” the operation recovers with the same state as it is in the setback duration. Keep in mind if the setback mode is in “Scheduling” and set as “qF: 02”. Refer to the chart below for the operation state.

(a) The last operation state before the setback duration is in “Run”

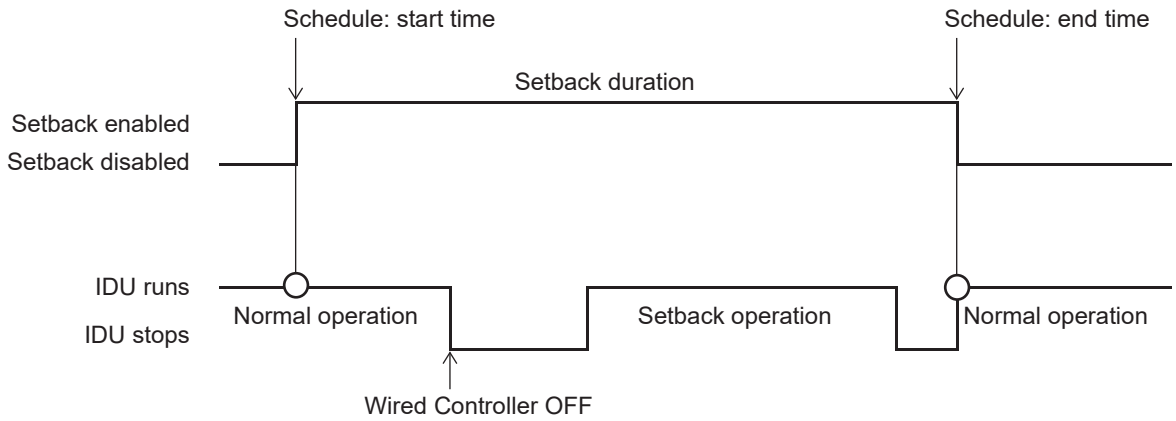

(b) The last operation state before the setback duration is in “Stop”

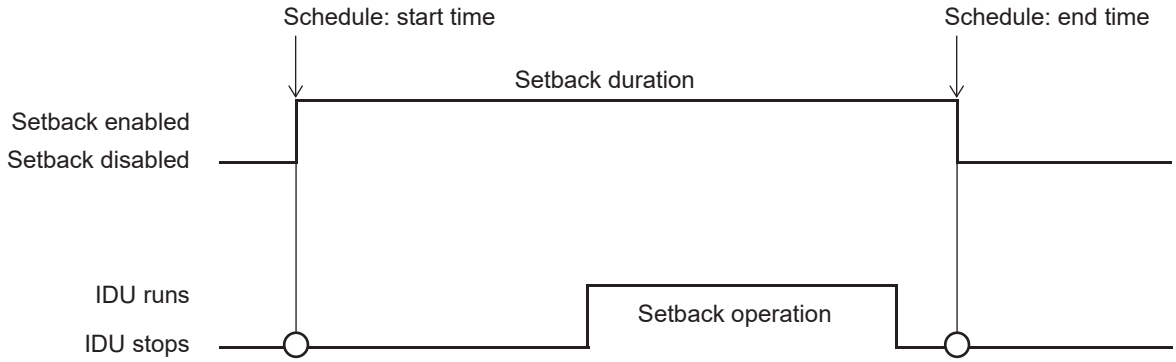

- In combination of the setback and motion sensor, the power saving function of the motion sensor is disabled during the setback.
- The setback cannot combine with the room thermostat (01 or in external input).
- The setback cannot simultaneously run indoor unit rotation control or intermittent operation control.
- Do not totally disable wired controller from the central controller in the setback operation.
- Do not use “Wired controller is disabled after force stop” in setback operation. Use the function selection r9 “Wired Controller Prohibit Function while Setback Operation” when disabling the setback function by the wired controller.
- Do not use the function selection d1 ”Power Supply ON/OFF1” and function selection d3 “Power Supply ON/OFF 2” in the setback operation.

(6) Optional Function Setting Method from Wired Controller

1. Press and hold “Menu” and “Back/Help” simultaneously for at least 3 seconds during the normal mode (when unit is not operated). The Test Run menu is displayed.

2. Select “Function Selection” or “Input/Output” from the Test Run menu and press “OK”.

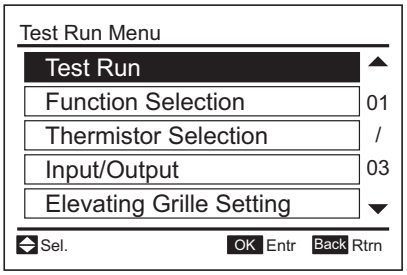

3. Select the indoor unit by pressing “△ ▽ ◁ ▷” and touch “OK”.
(This screen is NOT displayed when the number of an indoor unit connected with the controller is "1". In this case, "4" is displayed.)

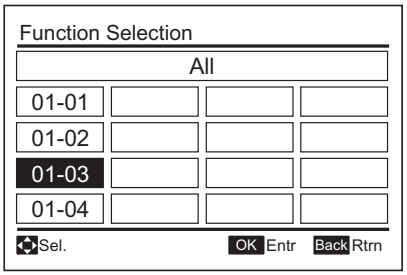

Function Selection

4. Press “△ ▽” and select the item.

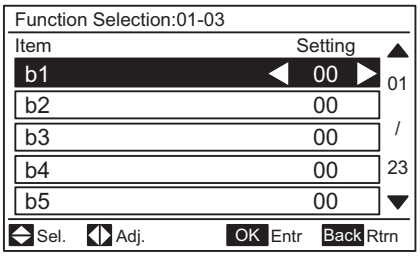

5. Press “◁ ▷” and change the setting.

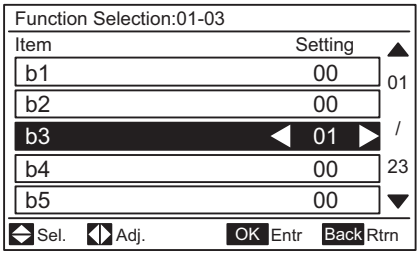

Input/Output Setting

4. Press “△ ▽” and select the item.

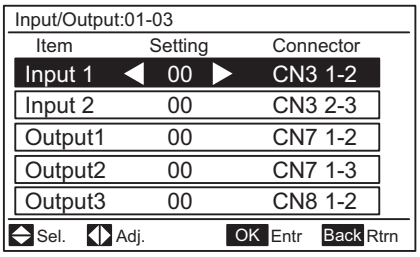

5. Press “◁ ▷” and change the setting.

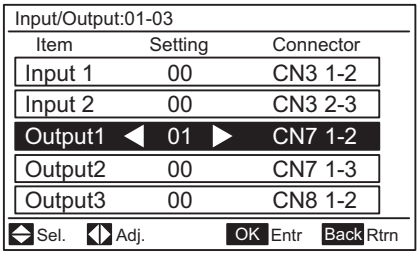

6. Press “OK” so that the confirmation screen is displayed.

7. Select “Yes” and press “OK”.
The Test Run menu is displayed after the setting is confirmed.
If “No” is selected, the screen returns to "4".

8. Press “Back/Help” on the Test Run menu to return to the normal mode.

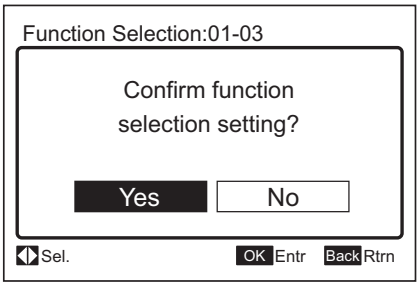

(Figure for Function Selection)

To set other units, press “Back/Help” at "4" and "5" so that the screen returns to "3".
(If the number of indoor unit connected with the controller is "1", the screen returns to "1".)

■ Cooling/Heating Auto Changeover Dual Setpoint Control

In case of EconoFresh, this control is not available for all fresh mode and gas sensor mode.

(1) Abstract

This function is utilized to change cooling and heating operation automatically (the same operation mode for indoor units in the same refrigerant cycle) depending on both cooling setpoint and heating setpoint (dual setpoint).
This function is mainly for Heat Recovery System. In case of Heat Pump System, the function is available with some limitation.

(2) How to set Cooling/Heating Auto Changeover Dual Setpoint Control

This setting is available through the optional function in the Function Selection Menu, which is located in the Test Run Menu of the wired controller.
Select an item on the table below and enter it to enable this function.

b8	Automatic COOL/HEAT Operation
r1	Dual Setpoint
r2	Cooling/Heating Changeover Temperature
rb	Minimum Cool/Heat Time for Auto Cool/Heat Operation
rC	Outdoor Temperature Threshold for Heat Control at Auto Cool/Heat Dual Setpoint
rd	Outdoor Temperature Threshold for Cool Control at Auto Cool/Heat Dual Setpoint

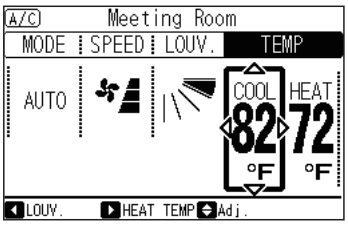

By selecting “01” in b8 and r1, each configuration is available in cooling and heating.

(3) Control Operation Time Chart

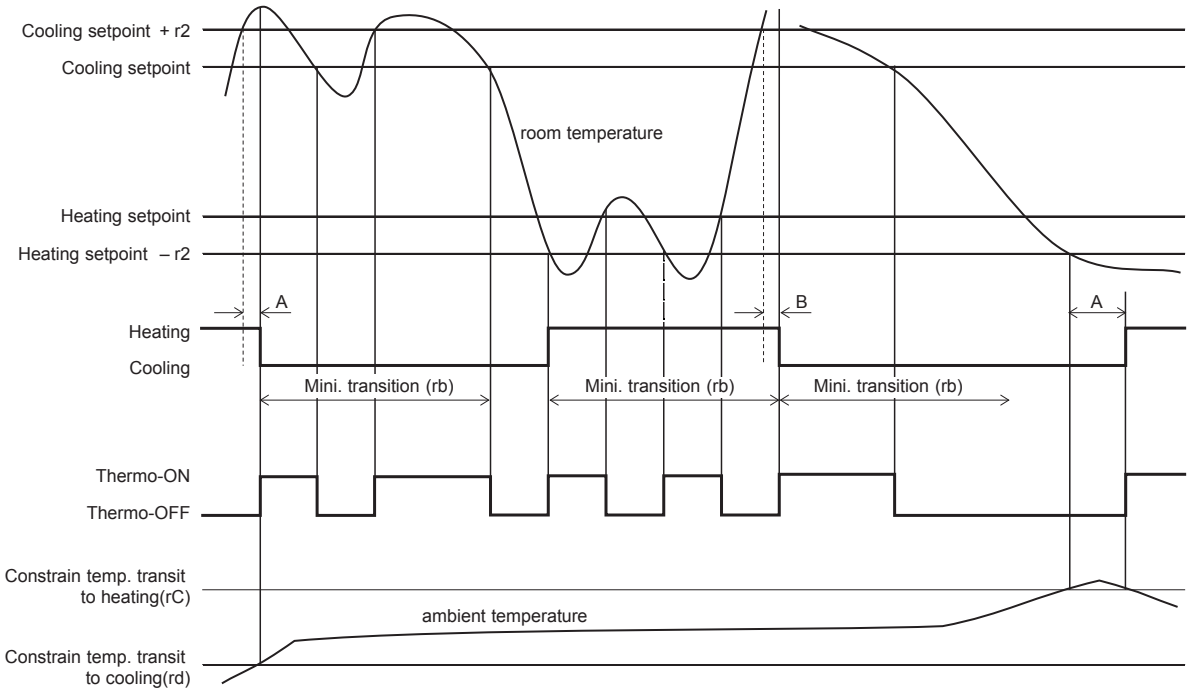

A: Period that operation mode does not change due to constraints of the mode transition by ambient temp.
B: Period that operation mode does not change due to the minimum transition time.

NOTES:

1. If either one of the wired controller or indoor unit existing in the same group is not retained this function, the function does not work.
2. The setpoint must be “cooling setpoint ≥ heating setpoint +4°F (2.5°C)”.
3. When constraints of the mode transition due to the ambient (rC and rd) are out of the scope of the ambient constrain in outdoor unit, the ambient constraint control in outdoor unit takes priority.
4. This function can be used only in heat recovery system.
5. Change optional function setting “b8” to“01” when using this function.
6. Be sure to use only the “00” setting condition when combining optional function settings, “rC” and “rd,” with a water source unit. This setting does not function.

Reference:

Control Operation Time Chart for Single Setpoint Control

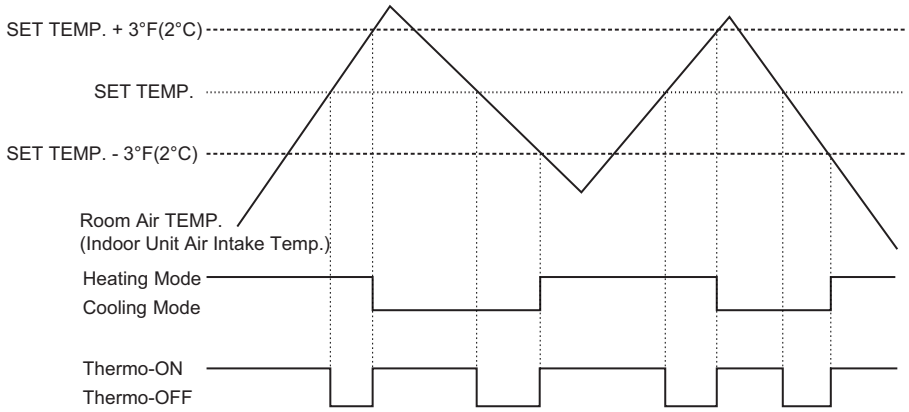

Thermo-ON: The outdoor unit and some indoor units are running.
Thermo-OFF: The outdoor unit and some indoor units stay on, but don’t run.

(4) Flow Chart

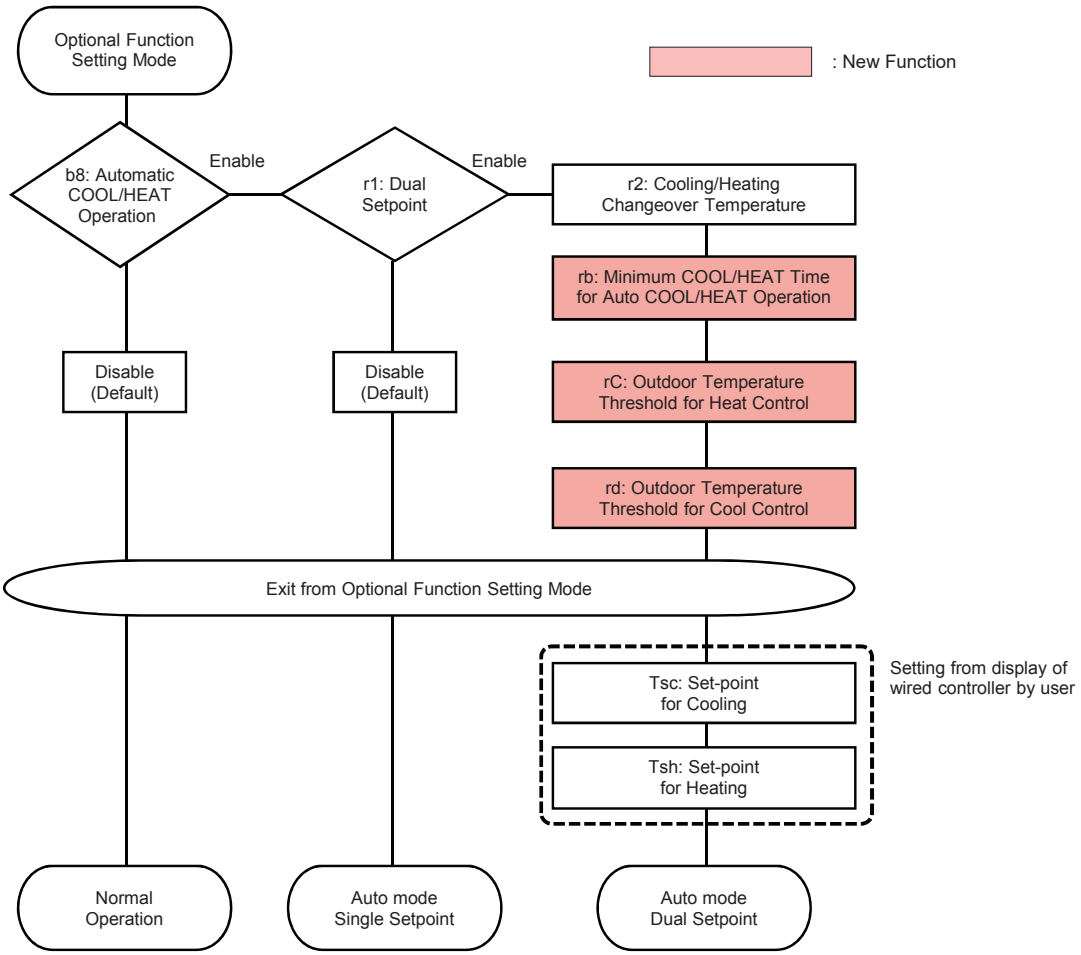

Items	Optional Function	Range	Units
b8	Automatic COOL/HEAT Operation	00: Not Available 01: Available	—
r1	Dual Setpoint	00: Not Available 01: Available	—
r2	Cooling/Heating Changeover Temperature	2 (1.0) 3 (1.5) ⋮ 5 (3.0) 1 (0.5)	°F (°C)
rb	Minimum COOL/HEAT Time for Auto COOL/ HEAT Operation	00: Not Available 01: 10 02: 20 ⋮ 12: 120	Min

Items	Optional Function	Range	Units
rC	Threshold for Outdoor Temperature for Heat Control at Auto COOL/HEAT Dual Setpoint	00: Not Available 01: 68 (20) 02: 70 (21) ⋮ 21:104(40) 22: 32 (0) 23: 34 (1) ⋮ 41: 66 (19)	°F (°C)
rd	Threshold for Outdoor Temperature for Cool Control at Auto COOL/HEAT Dual Setpoint	00: Not Available 01: 50(10) 02: 52(11) ⋮ 31:104(40) 32: -4(-20) 33: -2(-19) ⋮ 61: 48 (9)	°F (°C)

NOTE:
• Setting Condition with Underlined Part is Factory-Setting.

(5) Optional Function Setting Method from Wired Controller

1. Press and hold “Menu” and “Back/Help” simultaneously for at least 3 seconds during the normal mode (when unit is not operated). The Test Run menu is displayed.

2. Select “Function Selection” or “Input/Output” from the Test Run menu and press “OK”.

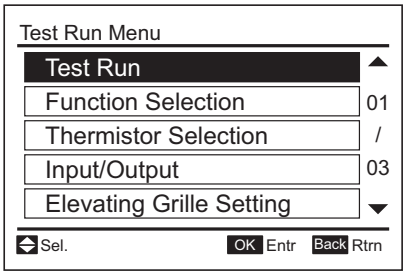

3. Select the indoor unit by pressing “△ ▽ ◁ ▷” and touch “OK”.
(This screen is NOT displayed when the number of an indoor unit connected with the controller is "1". In this case, "4" is displayed.)

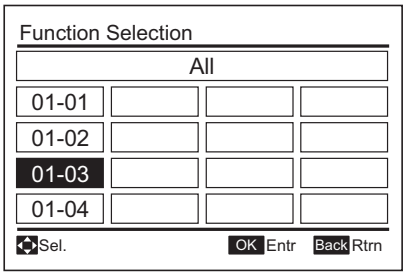

Function Selection

4. Press “△ ▽” and select the item.

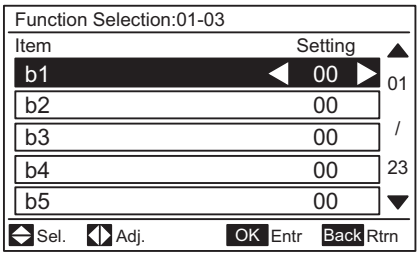

5. Press “◁ ▷” and change the setting.

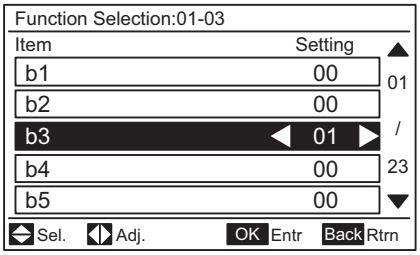

Input/Output Setting

4. Press “△ ▽” and select the item.

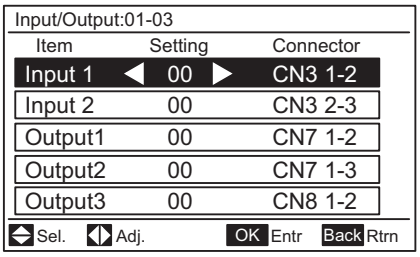

5. Press “◁ ▷” and change the setting.

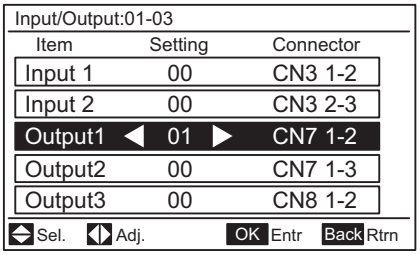

6. Press “OK” so that the confirmation screen is displayed.

7. Select “Yes” and press “OK”.
The Test Run menu is displayed after the setting is confirmed.
If “No” is selected, the screen returns to "4".

8. Press “Back/Help” on the Test Run menu to return to the normal mode.

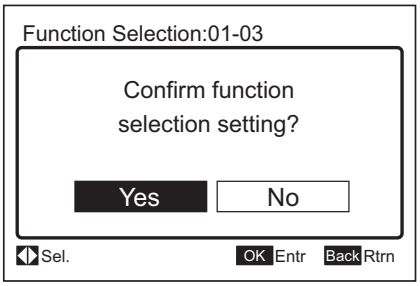

(Figure for Function Selection)

To set other units, press “Back/Help” at "4" and "5" so that the screen returns to "3".
(If the number of indoor unit connected with the controller is "1", the screen returns to "1".)

© 2018 Johnson Controls, Inc.

SM-18003-rev.1

Code No. LIT-12013034
Revised September 2019